Klassen corporation
2021 Westwind Drive Bakersfield CA 93301
Phone: 661.324.3000 Fax: 661.324.3900

Request For Information

To: Jim Pan
tBP/Architecture
5455 Wilshire Blvd., Ste. 1200
Los Angeles, CA 90036

Phone: 323.556.3788 **Fax:** 323.556.3799

Requested By: Sam Kamand
Klassen Corporation
2021 Westwind Drive
Bakersfield, CA 93301-3015

Project: AVCCD Health Science Building
Job Number: 05-157
Request Number: 00001
Date: 12/28/2009
Title: Selector MV-Switch #13 Fuse size

REQUEST:

The selector MV-Switch#13 on sheet E 0.2 needs a fuse typr and size specified. Provisions were made for 400 Amp fuses at the switch. The switch is of Model #PMH-9 S&C, Serial Number 086958.

Please advise of the size of the fuses to include in an addendum

Signed: _____
Sam Kamand

ANSWER:

Pad-mount transformer will be internally protected with 125A. Therefore, fuse at MV-Switch#13 can be specified at 150A or whatever will work with the campus infrastructure coordination effort.
L Jung, 1-05-2010

Signed: _____
Jim Pan

Status: NEW **Ball In Court:** Jim Pan **Due Date:** 1/5/2010

Klassen corporation
2021 Westwind Drive Bakersfield CA 93301
Phone: 661.324.3000 Fax: 661.324.3900

Pre Bid Request For Information

To: Jim Pan
tBP/Architecture
5455 Wilshire Blvd., Ste. 1200
Los Angeles, CA 90036

Phone: 323.556.3788 **Fax:** 323.556.3799

Requested By: Chris Klassen
Klassen Corporation
2021 Westwind Drive
Bakersfield, CA 93301-3015

Project: AVCCD Health Science Building
Job Number: 05-157
Request Number: 00002
Date: 1/14/2010
Title: Firelite Frame Material

REQUEST:

Firelite frame is called out on sheet A6.16 to be aluminum. Shouldn't this be hollow metal?

Signed: _____
Chris Klassen

ANSWER:

Yes, changed the designation of the hollow metal frame on sheet A6.16 to "HM-1HR" and add this material symbol to sheet 9.01 under the heading "08950-Steel Curtain Walls". See Addendum #1 drawings.

Signed: _____
Jim Pan

Status: NEW **Ball In Court:** Jim Pan **Due Date:** 1/21/2010

Klassen corporation
2021 Westwind Drive Bakersfield CA 93301
Phone: 661.324.3000 Fax: 661.324.3900

Pre Bid Request For Information

To: Jim Pan
tBP/Architecture
5455 Wilshire Blvd., Ste. 1200
Los Angeles, CA 90036

Phone: 323.556.3788 **Fax:** 323.556.3799

Requested By: Chris Klassen
Klassen Corporation
2021 Westwind Drive
Bakersfield, CA 93301-3015

Project: AVCCD Health Science Building
Job Number: 05-157
Request Number: 00003
Date: 1/14/2010
Title: Plumbing Under Footings

REQUEST:

Please confirm that all underground plumbing was designed to go under footings.

Signed: _____
Chris Klassen

ANSWER:

Added structural detail 3/S-5.07 for pipe sleeve penetrations through foundation tie beams as part of addendum #1.

Signed: _____
Jim Pan

Status: NEW **Ball In Court:** Jim Pan **Due Date:** 1/21/2010

Klassen corporation
2021 Westwind Drive Bakersfield CA 93301
Phone: 661.324.3000 Fax: 661.324.3900

Pre Bid Request For Information

To: Jim Pan
tBP/Architecture
5455 Wilshire Blvd., Ste. 1200
Los Angeles, CA 90036

Phone: 323.556.3788 **Fax:** 323.556.3799

Requested By: Chris Klassen
Klassen Corporation
2021 Westwind Drive
Bakersfield, CA 93301-3015

Project: AVCCD Health Science Building
Job Number: 05-157
Request Number: 00004
Date: 1/14/2010
Title: Material and Color Discrepancies

REQUEST:

Sheets 9.01 and 9.02 (Material and Color Schedules) have the following discrepancies
☐1) 06402 - Is this the upholstery in section 12730? Section 12730 is upholstery only
☐2) 06425 - this product is a part of 06410 - plastic laminate casework
☐3) 06650 - is 06655 and 06620 in specs (two specs under one)
☐4) 07415 - is 07412 in specs
☐5) 07534 - is 07531 in specs
☐6) 09545 - is 09425 in specs
☐7) 09670 - is 09672 resinous flooring in specs
☐8) 09945 - is 09940 Decorative Paint Finish System in specs
☐9) 10605 - no specs provided. Is this the same product in section 05500 item 2.2F?
☐10) 12490 - no specs provided.

Signed: _____
Chris Klassen

ANSWER:

Addendum #1
1) Moved UPHOL-1,2 to section 12730-Upholstered Seating
2) Moved SCC-1,2 to section 06410-Plastic Laminate Casework
3) Moved SSU-1,2,3 to section 06620-Solid Polymer Tops, moved SPF-1,2,3 to section 06655-Resin Panels
4) Changed title of 07415-Metal Siding to 07412-Aluminum Wall Panels
5) Changed title to 07531-Thermoplastic Membrane Roofing
6) Changed title to 09425-Fabric Covered Acoustical Wall Panels
7) Changed title to 09672-Resinous Flooring

Signed: _____
Jim Pan

Status: NEW **Ball In Court:** Jim Pan **Due Date:** 1/21/2010

8) Changed title to 09940-Decorative Paint Finish System
9) Moved WWF-1 to section 05500-Metal Fabrications
10) Added Section 12490

Klassen corporation
2021 Westwind Drive Bakersfield CA 93301
Phone: 661.324.3000 Fax: 661.324.3900

Pre Bid Request For Information

To: Jim Pan
tBP/Architecture
5455 Wilshire Blvd., Ste. 1200
Los Angeles, CA 90036

Phone: 323.556.3788 **Fax:** 323.556.3799

Requested By: Chris Klassen
Klassen Corporation
2021 Westwind Drive
Bakersfield, CA 93301-3015

Project: AVCCD Health Science Building
Job Number: 05-157
Request Number: 00005
Date: 1/14/2010
Title: Seating Framework Details

REQUEST:

Section 12730 references sections 06105 and 06410 for wood fabrication which do not talk about framework for seating. Please advise of details to the framework of this seating.

Signed: _____
Chris Klassen

ANSWER:

See upholstered seating detail on 2/6.03

Signed: _____
Jim Pan

Status: NEW **Ball In Court:** Jim Pan **Due Date:** 1/21/2010

Klassen corporation
2021 Westwind Drive Bakersfield CA 93301
Phone: 661.324.3000 Fax: 661.324.3900

Pre Bid Request For Information

To: Jim Pan
tBP/Architecture
5455 Wilshire Blvd., Ste. 1200
Los Angeles, CA 90036

Phone: 323.556.3788 **Fax:** 323.556.3799

Requested By: Chris Klassen
Klassen Corporation
2021 Westwind Drive
Bakersfield, CA 93301-3015

Project: AVCCD Health Science Building
Job Number: 05-157
Request Number: 00006
Date: 1/14/2010
Title: Section 08600 Not In Specs

REQUEST:

Section 05082 references section 08600 which is not provided in specs. Please advise.

Signed: _____
Chris Klassen

ANSWER:

Don't see the reference to 08600 in section 05082.

Signed: _____
Jim Pan

Status: NEW **Ball In Court:** Jim Pan **Due Date:** 1/21/2010

Klassen corporation
2021 Westwind Drive Bakersfield CA 93301
Phone: 661.324.3000 Fax: 661.324.3900

Pre Bid Request For Information

To: Jim Pan
tBP/Architecture
5455 Wilshire Blvd., Ste. 1200
Los Angeles, CA 90036

Phone: 323.556.3788 **Fax:** 323.556.3799

Requested By: Chris Klassen
Klassen Corporation
2021 Westwind Drive
Bakersfield, CA 93301-3015

Project: AVCCD Health Science Building
Job Number: 05-157
Request Number: 00007
Date: 1/14/2010
Title: Casework Alternate Details

REQUEST:

Bid Alternate # 4 calls for change from p-lam to wood casework. Specs or plans do not detail out this alternate.

Signed: _____
Chris Klassen

ANSWER:

Added wood veneer to section 06410. No change in details necessary since we would just be replacing p-lam veneer with wood veneer.

Signed: _____
Jim Pan

Status: NEW **Ball In Court:** Jim Pan **Due Date:** 1/21/2010

Klassen corporation
2021 Westwind Drive Bakersfield CA 93301
Phone: 661.324.3000 Fax: 661.324.3900

Pre Bid Request For Information

To: Jim Pan
tBP/Architecture
5455 Wilshire Blvd., Ste. 1200
Los Angeles, CA 90036

Phone: 323.556.3788 **Fax:** 323.556.3799

Requested By: Chris Klassen
Klassen Corporation
2021 Westwind Drive
Bakersfield, CA 93301-3015

Project: AVCCD Health Science Building
Job Number: 05-157
Request Number: 00008
Date: 1/14/2010
Title: Bid Alternate #6 Details

REQUEST:

Bid Alternate # 6 Plans and specs do not have details of changes to floors, ramps, and seats.

Signed: _____
Chris Klassen

ANSWER:

The finish floor elevations of the floors and ramps for Alternate #6 are defined on sheets A-7.30 and A-7.31. The seats are called out in spec section 12610, and use the standard manufacturer's mounting recommendations for a concrete floor (to be shown in shop drawings)

Signed: _____
Jim Pan

Status: NEW **Ball In Court:** Jim Pan **Due Date:** 1/21/2010

Klassen corporation
2021 Westwind Drive Bakersfield CA 93301
Phone: 661.324.3000 Fax: 661.324.3900

Pre Bid Request For Information

To: Jim Pan
tBP/Architecture
5455 Wilshire Blvd., Ste. 1200
Los Angeles, CA 90036

Phone: 323.556.3788 **Fax:** 323.556.3799

Requested By: Chris Klassen
Klassen Corporation
2021 Westwind Drive
Bakersfield, CA 93301-3015

Project: AVCCD Health Science Building
Job Number: 05-157
Request Number: 00009
Date: 1/14/2010
Title: Bid Alternate #7 Clarification

REQUEST:

Bid Alternate # 7 calls for hallways and stairs to change from rubber flooring to terrazzo.
1) Finish schedule only calls for stair # 4 to have this change, is this correct?
2) If the change is to pre-cast terrazzo stair/landing units, doesn't the stair structural system have to be changed as well? A pan filled system will not work in this situation. Plans do not show these structural changes and call them out as an alternate.
3) Which hallways change to this set terrazzo? Please note in remarks on finish schedule as done at stair # 4 for clarity.

Signed: _____
Chris Klassen

ANSWER:

Revised sheet 9.01 sections 09400 & 09442 to show correct terrazzo materials/colors
Revised finish schedule sheets 9.11, 9.12, and 9.13 to show correct floor finish designation for Alternate #7 in corridors, lobbies, stairs, & elevators.
Revised finish plans A-9.01 - A-9.06 to show alternate flooring designations.
Added detail 15/13.01 for alternate precast concrete tread & riser
Added detail reference for 15/13.01 to stair sections on sheets A-7.06 and A-7.08

Signed: _____
Jim Pan

Status: NEW **Ball In Court:** Jim Pan **Due Date:** 1/21/2010

Klassen corporation
2021 Westwind Drive Bakersfield CA 93301
Phone: 661.324.3000 Fax: 661.324.3900

Pre Bid Request For Information

To: Jim Pan
tBP/Architecture
5455 Wilshire Blvd., Ste. 1200
Los Angeles, CA 90036

Phone: 323.556.3788 **Fax:** 323.556.3799

Requested By: Chris Klassen
Klassen Corporation
2021 Westwind Drive
Bakersfield, CA 93301-3015

Project: AVCCD Health Science Building
Job Number: 05-157
Request Number: 00010
Date: 1/14/2010
Title: Access Control Spec and Details

REQUEST:

No access control spec for card readers. No single line diagrams of access control System. Electrical drawings need to reflect electrical requirements for access control (where does power need to be ran?).

Signed: _____
Chris Klassen

ANSWER:

Added spec section16722. Electrical drawings updated to show requirements for access control.

Signed: _____
Jim Pan

Status: NEW **Ball In Court:** Jim Pan **Due Date:** 1/21/2010

Klassen corporation
2021 Westwind Drive Bakersfield CA 93301
Phone: 661.324.3000 Fax: 661.324.3900

Pre Bid Request For Information

To: Jim Pan
tBP/Architecture
5455 Wilshire Blvd., Ste. 1200
Los Angeles, CA 90036

Phone: 323.556.3788 **Fax:** 323.556.3799

Requested By: Chris Klassen
Klassen Corporation
2021 Westwind Drive
Bakersfield, CA 93301-3015

Project: AVCCD Health Science Building
Job Number: 05-157
Request Number: 00011
Date: 1/14/2010
Title: Stonshield Spelling

REQUEST:

Section 09672 calls for Stoneshield which should be Stonshield. (confuses an internet search of the product)

Signed: _____
Chris Klassen

ANSWER:

Corrected spelling.

Signed: _____
Jim Pan

Status: NEW **Ball In Court:** Jim Pan **Due Date:** 1/21/2010

Klassen corporation
2021 Westwind Drive Bakersfield CA 93301
Phone: 661.324.3000 Fax: 661.324.3900

Pre Bid Request For Information

To: Jim Pan
tBP/Architecture
5455 Wilshire Blvd., Ste. 1200
Los Angeles, CA 90036

Phone: 323.556.3788 **Fax:** 323.556.3799

Requested By: Chris Klassen
Klassen Corporation
2021 Westwind Drive
Bakersfield, CA 93301-3015

Project: AVCCD Health Science Building
Job Number: 05-157
Request Number: 00012
Date: 1/14/2010
Title: M&C Schedule MTL Call Outs

REQUEST:

Material and color schedule sheet 9.01 section 05500 calls out MTL's 2,3,5,6,7,& 8. these are not in that spec. Stainless steel railing is section 05521. Column covers are 05580. MTL's 5, 6 and 8 do no have a manufacturer or product # on sheet 9.01. Are these just items per section 07600?

Signed: _____
Chris Klassen

ANSWER:

Revised sheet 9.01 to show the following:
MTL-7 now part of 05521 - Stainless Steel Railings
MTL-2,3 now part of 05580 - Preformed Metal Column Covers
MTL-5,6,8 now part of 07600 - Metal Flashings and Sheet Metal Work.
The "remarks" section references section 05082 for Fluoropolymer Resin Coating.

Signed: _____
Jim Pan

Status: NEW **Ball In Court:** Jim Pan **Due Date:** 1/21/2010

Klassen corporation
2021 Westwind Drive Bakersfield CA 93301
Phone: 661.324.3000 Fax: 661.324.3900

Pre Bid Request For Information

To: Jim Pan
tBP/Architecture
5455 Wilshire Blvd., Ste. 1200
Los Angeles, CA 90036

Phone: 323.556.3788 **Fax:** 323.556.3799

Requested By: Chris Klassen
Klassen Corporation
2021 Westwind Drive
Bakersfield, CA 93301-3015

Project: AVCCD Health Science Building
Job Number: 05-157
Request Number: 00013
Date: 1/14/2010
Title: Trespa Spelling

REQUEST:

Section 06410 product 2.2B called out is spelled Trespa and not Tespa (confuses an internet search of the product)

Signed: _____
Chris Klassen

ANSWER:

Corrected spelling.

Signed: _____
Jim Pan

Status: NEW **Ball In Court:** Jim Pan **Due Date:** 1/21/2010

Klassen corporation
2021 Westwind Drive Bakersfield CA 93301
Phone: 661.324.3000 Fax: 661.324.3900

Pre Bid Request For Information

To: Jim Pan
tBP/Architecture
5455 Wilshire Blvd., Ste. 1200
Los Angeles, CA 90036

Phone: 323.556.3788 **Fax:** 323.556.3799

Requested By: Chris Klassen
Klassen Corporation
2021 Westwind Drive
Bakersfield, CA 93301-3015

Project: AVCCD Health Science Building
Job Number: 05-157
Request Number: 00014
Date: 1/14/2010
Title: Steel Curtain Walls Location

REQUEST:

Section 08950 - Steel Curtain Walls. Where does this apply on the project?

Signed: _____
Chris Klassen

ANSWER:

Where rated glass is needed for exterior curtain wall (window). In this case at the lecture hall window on the second floor.

Signed: _____
Jim Pan

Status: NEW **Ball In Court:** Jim Pan **Due Date:** 1/21/2010

Klassen corporation
2021 Westwind Drive Bakersfield CA 93301
Phone: 661.324.3000 Fax: 661.324.3900

Pre Bid Request For Information

To: Jim Pan
tBP/Architecture
5455 Wilshire Blvd., Ste. 1200
Los Angeles, CA 90036

Phone: 323.556.3788 **Fax:** 323.556.3799

Requested By: Chris Klassen
Klassen Corporation
2021 Westwind Drive
Bakersfield, CA 93301-3015

Project: AVCCD Health Science Building
Job Number: 05-157
Request Number: 00015
Date: 1/14/2010
Title: Bituminous Surfacing Location

REQUEST:

Section 02711 - Bituminous Surfacing - Where does this apply on the project?
Section 02786 - Seal for Bituminous Surfacing - Where does this apply on the project?

Signed: _____
Chris Klassen

ANSWER:

These sections are in the specs in case of patching/repairs to existing AC surfaces.

Signed: _____
Jim Pan

Status: NEW **Ball In Court:** Jim Pan **Due Date:** 1/21/2010

Klassen corporation
2021 Westwind Drive Bakersfield CA 93301
Phone: 661.324.3000 Fax: 661.324.3900

Pre Bid Request For Information

To: Jim Pan
tBP/Architecture
5455 Wilshire Blvd., Ste. 1200
Los Angeles, CA 90036

Phone: 323.556.3788 **Fax:** 323.556.3799

Requested By: Chris Klassen
Klassen Corporation
2021 Westwind Drive
Bakersfield, CA 93301-3015

Project: AVCCD Health Science Building
Job Number: 05-157
Request Number: 00016
Date: 1/14/2010
Title: Concrete Paver Details

REQUEST:

No specs/details for the concrete paver. Please provide

Signed: _____
Chris Klassen

ANSWER:

Added / Modified Detail 10/2.01 for concrete pavers
Added spec section 02520 for precast concrete paving.

Signed: _____
Jim Pan

Status: NEW **Ball In Court:** Jim Pan **Due Date:** 1/21/2010

Klassen corporation
2021 Westwind Drive Bakersfield CA 93301
Phone: 661.324.3000 Fax: 661.324.3900

Pre Bid Request For Information

To: Jim Pan
tBP/Architecture
5455 Wilshire Blvd., Ste. 1200
Los Angeles, CA 90036

Phone: 323.556.3788 **Fax:** 323.556.3799

Requested By: Chris Klassen
Klassen Corporation
2021 Westwind Drive
Bakersfield, CA 93301-3015

Project: AVCCD Health Science Building
Job Number: 05-157
Request Number: 00017
Date: 1/29/2010
Title: Steel Contractor Certification

REQUEST:

Section 05120/1.4B, page 3 noted the Fabricator Qualification requirement to be AISC Certified.
Contractor, Blazing Industrial Steel is a licenced Fabricator and Erector: LA Certified.
They propose that the LA Certification can be used in lieu of AISC Certification.

Is this acceptable?

Signed: _____
Chris Klassen

ANSWER:

LA Certification is acceptable.
-Gary Duncan, KPFF
01-29-10

Signed: _____
Jim Pan

Status: NEW **Ball In Court:** Jim Pan **Due Date:** 2/5/2010

Klassen corporation
2021 Westwind Drive Bakersfield CA 93301
Phone: 661.324.3000 Fax: 661.324.3900

Pre Bid Request For Information

To: Jim Pan
tBP/Architecture
5455 Wilshire Blvd., Ste. 1200
Los Angeles, CA 90036

Phone: 323.556.3788 **Fax:** 323.556.3799

Requested By: Chris Klassen
Klassen Corporation
2021 Westwind Drive
Bakersfield, CA 93301-3015

Project: AVCCD Health Science Building
Job Number: 05-157
Request Number: 00018
Date: 2/11/2010
Title: Duct Work Material

REQUEST:

Refer to attached BMI RFI#1:
PER SPEC BOOK REFRENCE DUCTS 15810-7 PARAGRAPH E
STATES THAT ALL FUME HOOD EXHAUST DUCTWORK NEEDS TO BE 22 GUAGE STAINLESS WITH WELDED SEAMS

1) DOES ALL DUCT WORK CONNECTED TO FUME EXHAUST SYSTEM NEED TO BE 22 GUAGE STAINLESS WELDED EVEN MAIN EXHAUST DUCT SHAFT GOING UP THROUGH ROOF?

2) DOES ALL EXHAUST DUCT WORK IN LABS NOT CONNECTED TO FUME HOODS NEED TO BE STAINLESS ALSO?

Signed: _____
Chris Klassen

ANSWER:

Per specs: Fume hood exhaust system shall be minimum 22 gauge stainless steel.

Per dwgs: Ducts required to be stainless steel are noted with * next to size. - S&K Engineers

Signed: _____
Jim Pan

Status: NEW **Ball In Court:** Jim Pan **Due Date:** 2/18/2010

Klassen corporation
2021 Westwind Drive Bakersfield CA 93301
Phone: 661.324.3000 Fax: 661.324.3900

Pre Bid Request For Information

To: Jim Pan
tBP/Architecture
5455 Wilshire Blvd., Ste. 1200
Los Angeles, CA 90036

Phone: 323.556.3788 **Fax:** 323.556.3799

Requested By: Chris Padgett
Klassen Corporation
2010 West Avenue K #827
Lancaster, CA 93536

Project: AVCCD Health Science Building
Job Number: 05-157
Request Number: 00019
Date: 2/15/2010
Title: Demo Existing Nursery

REQUEST:

Reference Sheet DC-1.00:

Removal Note 13 indicates removal existing nursery however Note 13 is not found on this sheet? Please advise where this applies.

Signed: _____
Chris Padgett

ANSWER:

DISREGARD REMOVAL NOTE NO. 13. THE NURSERY WAS REMOVED PRIOR TO HEALTH SCIENCE.

BY: ALLAN LUMIDAO
VCA 02/15/10

Signed: _____
Jim Pan

Status: NEW **Ball In Court:** Jim Pan **Due Date:** 2/22/2010

Klassen corporation
2021 Westwind Drive Bakersfield CA 93301
Phone: 661.324.3000 Fax: 661.324.3900

Pre Bid Request For Information

To: Jim Pan
tBP/Architecture
5455 Wilshire Blvd., Ste. 1200
Los Angeles, CA 90036

Phone: 323.556.3788 **Fax:** 323.556.3799

Requested By: Chris Klassen
Klassen Corporation
2021 Westwind Drive
Bakersfield, CA 93301-3015

Project: AVCCD Health Science Building
Job Number: 05-157
Request Number: 00020
Date: 2/15/2010
Title: Air Balance Certification Sub.

REQUEST:

Please review the attached documents from Associated Air Blanace and advise if TABB certification will be an acceptable substitution on this project.

Signed: _____
Chris Klassen

ANSWER:

No. The Test and Balance company will be an AABC company as specified in the bid documents.
John Holland/S&K Engineers
Feb 18, 2010

Signed: _____
Jim Pan

Status: NEW **Ball In Court:** Jim Pan **Due Date:** 2/22/2010

Klassen corporation
2021 Westwind Drive Bakersfield CA 93301
Phone: 661.324.3000 Fax: 661.324.3900

Pre Bid Request For Information

To: Jim Pan
tBP/Architecture
5455 Wilshire Blvd., Ste. 1200
Los Angeles, CA 90036

Phone: 323.556.3788 **Fax:** 323.556.3799

Requested By: Chris Klassen
Klassen Corporation
2021 Westwind Drive
Bakersfield, CA 93301-3015

Project: AVCCD Health Science Building
Job Number: 05-157
Request Number: 00021
Date: 2/15/2010
Title: Wood Door STC Rating

REQUEST:

There are approximately 17 wooden doors with an STC of 56 or 57. Please confirm this rating is correct.

REW Inc. has indicated that the highest STC they have been able to find on a wood door is 51, and 53 on a hollow metal door.

Please advise.

Signed: _____
Chris Klassen

ANSWER:

Lower the STC to 51 on wood doors. Change door #111D at the compressor room to a steel acoustical door. Changes will be included in addendum #2.

Signed: _____
Jim Pan

Status: NEW **Ball In Court:** Jim Pan **Due Date:** 2/22/2010

Klassen corporation
2021 Westwind Drive Bakersfield CA 93301
Phone: 661.324.3000 Fax: 661.324.3900

Pre Bid Request For Information

To: Jim Pan
tBP/Architecture
5455 Wilshire Blvd., Ste. 1200
Los Angeles, CA 90036

Phone: 323.556.3788 **Fax:** 323.556.3799

Requested By: Sam Kamand
Klassen Corporation
2021 Westwind Drive
Bakersfield, CA 93301-3015

Project: AVCCD Health Science Building
Job Number: 05-157
Request Number: 00022
Date: 2/16/2010
Title: Scopes of Concrete Bid Packages

REQUEST:

1) Does all concrete sand blast finish only apply to concrete less than 6%?
2) Who is responsible for digging of masonry footings?
3) Who is responsible for 6" concrete pads for the landscapers?

Signed: _____
Sam Kamand

ANSWER:

1) Yes. Refer to note 5, detail 1, Sheet C-7.00.
2) Structural Concrete, Bid Package 3041.
3) Site Concrete, Bid Package 3042.

Signed: _____
Jim Pan

Status: NEW **Ball In Court:** Jim Pan **Due Date:** 2/23/2010

Klassen corporation
2021 Westwind Drive Bakersfield CA 93301
Phone: 661.324.3000 Fax: 661.324.3900

Pre Bid Request For Information

To: Jim Pan
tBP/Architecture
5455 Wilshire Blvd., Ste. 1200
Los Angeles, CA 90036

Phone: 323.556.3788 **Fax:** 323.556.3799

Requested By: Sam Kamand
Klassen Corporation
2021 Westwind Drive
Bakersfield, CA 93301-3015

Project: AVCCD Health Science Building
Job Number: 05-157
Request Number: 00023
Date: 2/16/2010
Title: Steel Package Clarifications

REQUEST:

1) Reference details 7,8/S-8.01:
Clarify who furnishes and installs L5x2 slip track clip angles to steel edge plates.

2) Reference detail 9/S-8.01:
Clarify who furnishes and installs HSS 2x2x1/4 parapet post that attaches to 12 ga. plate and bolts between metal studs at planetarium parapet.

Signed: _____
Sam Kamand

ANSWER:

Signed: Jim Pan 2/19

Status: NEW **Ball In Court:** Jim Pan **Due Date:** 2/23/2010

I have the following input:
The metal stud clips: These need to be coordinated with structural steel and the metal stud framer as note 3 on 1/S-6.04 requires that the clips align with the welded dowels at the bent plates. The clips are rolled steel, but are a very common shape, so either could furnish them. I can see these being installed by either structural steel or the metal framer as well. If I had to pick one I would suggest structural steel to furnish and install since the welding is all to rolled steel. Regardless, one will have to coordinate with the other to make sure that clips are provided where the metal framer needs them and that welded dowels are provided at clip locations as well.
The HSS at the planetarium parapet:
The tube size should be readily available, and the connection plates are heavy gage metal. I think this question also involves 10/S-8.01. Who furnishes/installs the metal blade which the HSS members support? I think whomever would take care of miscellaneous steel items with smaller construction tolerances such as handrails, guardrails, etc. should be the furnisher/installer.
Gary Duncan, SE | Associate
KPFF Consulting Engineers

Klassen corporation
2021 Westwind Drive Bakersfield CA 93301
Phone: 661.324.3000 Fax: 661.324.3900

Pre Bid Request For Information

To: Jim Pan
tBP/Architecture
5455 Wilshire Blvd., Ste. 1200
Los Angeles, CA 90036

Phone: 323.556.3788 **Fax:** 323.556.3799

Requested By: Chris Padgett
Klassen Corporation
2010 West Avenue K #827
Lancaster, CA 93536

Project: AVCCD Health Science Building
Job Number: 05-157
Request Number: 00024
Date: 2/16/2010
Title: Lithocrete Certified Installers

REQUEST:

Reference attached e-mail from Toneman Concrete:

Lithocrete can only be installed by a certified contractor. Because one of the only 2 certified contractors listed for California is also bidding on the 3041 Structural Concrete bid package, Toneman feels they may be at a competitive bidding disadvantage for this item.

Please advise if a substitute to Lithocrete would be acceptable?

Signed: _____
Chris Padgett

ANSWER:

Lithocrete just like any other specialty construction systems. Any contractor wants to compete in this market can obtain necessary certification. We can not substitute Lithocrete, GFRC, or Steel structure because of one contractor.

Signed: _____
Jim Pan

Status: NEW **Ball In Court:** Jim Pan **Due Date:** 2/23/2010

Klassen corporation
2021 Westwind Drive Bakersfield CA 93301
Phone: 661.324.3000 Fax: 661.324.3900

Pre Bid Request For Information

To: Jim Pan
tBP/Architecture
5455 Wilshire Blvd., Ste. 1200
Los Angeles, CA 90036

Phone: 323.556.3788 **Fax:** 323.556.3799

Requested By: Sam Kamand
Klassen Corporation
2021 Westwind Drive
Bakersfield, CA 93301-3015

Project: AVCCD Health Science Building
Job Number: 05-157
Request Number: 00025
Date: 2/19/2010
Title: Ductwork Lining

REQUEST:

Reference Section 15080 page 13:

Table 15080-3 indicates a 1" thick duct liner for supply air ductwork downstream of terminal units. This ductwork on floor plans is not shown as lined ductwork. Is it the intent to have all ductwork downstream of VAV boxes be lined? Please advise.

Signed: _____
Sam Kamand

ANSWER:

Yes it is. The specifications govern.
John Holland/S&K Engineers
March 01, 2010

Signed: Mark Held
Mark Held 3/3/10

Status: NEW **Ball In Court:** Jim Pan **Due Date:** 2/26/2010

Klassen corporation
2021 Westwind Drive Bakersfield CA 93301
Phone: 661.324.3000 Fax: 661.324.3900

Pre Bid Request For Information

To: Jim Pan
tBP/Architecture
5455 Wilshire Blvd., Ste. 1200
Los Angeles, CA 90036

Phone: 323.556.3788 **Fax:** 323.556.3799

Requested By: Sam Kamand
Klassen Corporation
2021 Westwind Drive
Bakersfield, CA 93301-3015

Project: AVCCD Health Science Building
Job Number: 05-157
Request Number: 00026
Date: 2/23/2010
Title: Fireproofing Locations

REQUEST:

Reference Section 07810 and 05120:

07810.1.1.A.1 Indicates to fireproof ALL structural beams, columns....unless otherwise indicated. Please identify exactly what steel members require spray on fireproofing (gridline etc.)

05120.2.3.J Indicates steel to have a primed finish. Please confirm that members receiving fireproofing should not have a primed finish on them.

Signed: _____
Sam Kamand

ANSWER:

07810.1.1.A.1 2 hr fireproofing on structural beams, columns and their connections, and steel deck between grid lines 1 to 3 and A to C. See architectural wall section on sheet A-6.06 for more detail.
05120.2.3.J Add "except that members receiving fireproofing."

Signed: _____
Jim Pan 3/1/10

Status: NEW **Ball In Court:** Jim Pan **Due Date:** 3/2/2010

Klassen corporation
2021 Westwind Drive Bakersfield CA 93301
Phone: 661.324.3000 Fax: 661.324.3900

Pre Bid Request For Information

To: Jim Pan
tBP/Architecture
5455 Wilshire Blvd., Ste. 1200
Los Angeles, CA 90036

Phone: 323.556.3788 **Fax:** 323.556.3799

Requested By: Sam Kamand
Klassen Corporation
2021 Westwind Drive
Bakersfield, CA 93301-3015

Project: AVCCD Health Science Building
Job Number: 05-157
Request Number: 00027
Date: 2/25/2010
Title: Comm Cable Clarifications

REQUEST:

#1 On Drawing T-401 /T-402 the enlarged room layouts show two vertical cable managers between each rack, however the rack elevation drawing only shows a single vertical cable manager and spec section 16750-2.13A.5 doesn't clarify a preferred cable manager manufacturer or style. Please clarify the manufacturer, style, size and quantity of vertical cable managers between and at the end of the row of racks.

#2 The quantity of patch panels and horizontal cable managers shown on the rack elevation drawings (on Drawings T-401/T-402) seem to exceed the number of cables actually being installed. Should the shown quantities of those items be included in this quote or should this be scaled down to match the actual number of cables?

#3 Drawing T-501 shows a 4 cell tube cable leaving the Health and Science Building, but doesn't shown its destination. Is this cable to be extended all of the way to the North and South MDF or should it connect to existing larger cables in Manhole #30?

#4 Drawing T-501 shows a 6 strand multimode and 6 strand single mode fiber from the 1st floor BDF to the 3 IDF closets. However it doesn't show any tube cable. What tube cable size should be extended to each room?

Signed: _____
Sam Kamand

ANSWER:

Signed: Jim Pan 3/1/10

Status: NEW **Ball In Court:** Jim Pan **Due Date:** 3/4/2010

1. Contractor shall provide CPI CCS Combination model #30162-703 vertical managers per AVC standard. There shall be one vertical manager (6" wide) on each side of all racks, as shown on the rack elevations.
2. Contractor shall provide actual quantities of patch panels and horizontal cable managers required to accommodate actual number of cables. There shall be a horizontal management at the top and bottom of each patch panel.
3. 4-cell tube cable shall connect to existing larger cable in Manhole #30, which was installed as part of the Base Infrastructure project.
4. Intrabuilding optical fiber shall be traditional fiber rather than Sumitomo Air Blown fiber and does not require tube cells. Refer to spec section 16750-2.3 for details of intrabuilding backbone optical fiber cable requirements.

By: Anthony Tima, Vantage

Klassen corporation
2021 Westwind Drive Bakersfield CA 93301
Phone: 661.324.3000 Fax: 661.324.3900

Pre Bid Request For Information

To: Jim Pan
tBP/Architecture
5455 Wilshire Blvd., Ste. 1200
Los Angeles, CA 90036

Phone: 323.556.3788 **Fax:** 323.556.3799

Requested By: Sam Kamand
Klassen Corporation
2021 Westwind Drive
Bakersfield, CA 93301-3015

Project: AVCCD Health Science Building
Job Number: 05-157
Request Number: 00028
Date: 2/25/2010
Title: Communications and Equipment Bid

REQUEST:

#1
Drawing T-2.01A, Note 1 states: Refer to Lab Drawing LE-2.XX for additional Telecommunications Outlet Locations, but the legends on LE-1.00 for the outlets state the following for the various outlet types:
Device shown for reference only. Coordinate exact locations, device quantities and types with data work.
Telephone outlet with trim ring, pull-string to accessible ceiling space. Coordinate with data work.
Telecommunications outlet in recessed fire rated floor box. Coordinate with data work.
Ceiling communications outlet mounted to ceiling tile or surface as applicable. See telecommunications system drawings for more information.
Wireless access point. Mount outlet 1'-0" above ceiling height. See telecommunications system drawings for more information.

Are these locations shown on the LE-2.XX drawings to be included in the Communications and Equipment Bid? If so do we use the legend from the T Drawings instead of the ones shown on the LE drawings for quantity of cables and configuration?

#2
A basket tray cable support system is shown on the T drawings, but there is no specification for them in the Communications portion. Is this to be included in the Communications and Equipment Bid or in the Electrical Bid? If it is included in the Communications section, please provide specifications for that product.

Signed: _____
Sam Kamand

ANSWER:

Signed: Mark Held
Mark Held 3/4/10

Status: NEW **Ball In Court:** Jim Pan **Due Date:** 3/4/2010

1. Communications cabling shall be provided for all of the locations shown in the Anatomy Lab #HS127 and GIS Lab #HS253. All other lab rooms shall only have cabling around the perimeter of each room as well as the instructor locations. All other outlets shown on the LE-2.XX drawings shall only have conduit and backbox infrastructure for future cabling should the College choose to utilize it. Refer to T0.01 legend for outlet configurations (cables and quantities).
2. Wire basket cable tray shall be part of the Electrical Bid. Please refer to the attached spec section 16134 for requirements.

Klassen corporation
2021 Westwind Drive Bakersfield CA 93301
Phone: 661.324.3000 Fax: 661.324.3900

Pre Bid Request For Information

To: Jim Pan
tBP/Architecture
5455 Wilshire Blvd., Ste. 1200
Los Angeles, CA 90036

Phone: 323.556.3788 **Fax:** 323.556.3799

Requested By: Sam Kamand
Klassen Corporation
2021 Westwind Drive
Bakersfield, CA 93301-3015

Project: AVCCD Health Science Building
Job Number: 05-157
Request Number: 00029
Date: 2/26/2010
Title: Elevator Clarification

REQUEST:

1. Spec section 14240 2.3 O. Car enclosure calls for 3. carpet on the side walls, and 4. 8" high granite base, however, drawing A14.01 shows plastic laminate wall panels and does not show the 8" granite base. We would prefer to follow the drawing on this one. Please confirm if plastic laminate wall panels and painted steel base is acceptable.

2. The hoistway dimensions are not clear on the drawing. Please confirm the hoistway size. Also, please confirm the entrance size is 4' x 7' and the cab height will be 8'.

Signed: Sam Kamand

ANSWER:

See Below

Signed: Jim Pan 2/26

Status: NEW **Ball In Court:** Jim Pan **Due Date:** 3/5/2010

1. I have revised the specs as part of Addendum #2, to include the following finishes for the elevator:
Ceiling: Stainless Steel
Walls: Plastic Laminate
Base: Rubber (Terrazzo Alternate)
Floor: Rubber (Terrazzo Alternate)

2.The hoistway sizes are different for all 3 elevators. Refer to structural drawings. However the minimum clearance required for the elevator as specified is 8'-2" x 10'-2" (Thyssen-Krupp)

The entrance is 4'-6" x 7'-0". The cab height is 7'-11".

Klassen corporation
2021 Westwind Drive Bakersfield CA 93301
Phone: 661.324.3000 Fax: 661.324.3900

Pre Bid Request For Information

To: Jim Pan
tBP/Architecture
5455 Wilshire Blvd., Ste. 1200
Los Angeles, CA 90036

Phone: 323.556.3788 **Fax:** 323.556.3799

Requested By: Chris Klassen
Klassen Corporation
2021 Westwind Drive
Bakersfield, CA 93301-3015

Project: AVCCD Health Science Building
Job Number: 05-157
Request Number: 00030
Date: 2/26/2010
Title: Fixture Type F6 Details

REQUEST:

Sheet E6.1, Detail C, please provide a manufacturer & model # for Fixture Type F6. F6 is not listed on the fixture schedule.

Signed: _____
Chris Klassen

ANSWER:

Fixture should be Type C.

L Jung, 2/26/2010

Signed: _____
Jim Pan 3/1/10

Status: NEW **Ball In Court:** Jim Pan **Due Date:** 3/5/2010

Klassen corporation
2021 Westwind Drive Bakersfield CA 93301
Phone: 661.324.3000 Fax: 661.324.3900

Pre Bid Request For Information

To: Jim Pan
tBP/Architecture
5455 Wilshire Blvd., Ste. 1200
Los Angeles, CA 90036

Phone: 323.556.3788 **Fax:** 323.556.3799

Requested By: Chris Klassen
Klassen Corporation
2021 Westwind Drive
Bakersfield, CA 93301-3015

Project: AVCCD Health Science Building
Job Number: 05-157
Request Number: 00032
Date: 3/2/2010
Title: Lab Exhaust Duct Work Material

REQUEST:

Is all ductwork that is associated with the Lab Exhaust Fans to be Stainless (type 304) throughout the entire building?

Signed: _____
Chris Klassen

ANSWER:

Per specs: Fume hood exhaust system shall be minimum 22 gauge stainless steel.

Per dwgs: Ducts required to be stainless steel are noted with * next to size.
John Holland/S&K Engineers 03-04-2010

Signed: Mark Held
Mark Held 3/8/10

Status: NEW **Ball In Court:** Jim Pan **Due Date:** 3/9/2010

Klassen corporation
2021 Westwind Drive Bakersfield CA 93301
Phone: 661.324.3000 Fax: 661.324.3900

Pre Bid Request For Information

To: Jim Pan
tBP/Architecture
5455 Wilshire Blvd., Ste. 1200
Los Angeles, CA 90036

Phone: 323.556.3788 **Fax:** 323.556.3799

Requested By: Chris Klassen
Klassen Corporation
2021 Westwind Drive
Bakersfield, CA 93301-3015

Project: AVCCD Health Science Building
Job Number: 05-157
Request Number: 00033
Date: 3/2/2010
Title: Missing Structural Member Sizes

REQUEST:

Please clarify the following:
1) Missing column sizes in 5 locations on S1.11B at Gridline 13 and 8'-7" south of G.9. Also on S1.11C at Gridlines P3.1, P4.1,5.1 and P7.6 north of Gridline PA.06 they are not shown on the column schedule.
2) Missing beam size on S1.12B at Gridleine H.7 between Gridlines 12.4 and 12.8.

Signed: _____
Chris Klassen

ANSWER:

1. Column at grid 13.1 is W8x58. The remaining columns are indicated in column schedule at P3.1-PX, P4.1-PX, P5.1-PX, and P7.6-PX on sheet S-4.02.
2. Beam is W14x22.
-Gary Duncan, KPFF 03-02-10

Signed: _____
~~Jim Pan~~ 3/3/10

Status: NEW **Ball In Court:** Jim Pan **Due Date:** 3/9/2010

Klassen corporation
2021 Westwind Drive Bakersfield CA 93301
Phone: 661.324.3000 Fax: 661.324.3900

Pre Bid Request For Information

To: Jim Pan
tBP/Architecture
5455 Wilshire Blvd., Ste. 1200
Los Angeles, CA 90036

Phone: 323.556.3788 **Fax:** 323.556.3799

Requested By: Chris Klassen
Klassen Corporation
2021 Westwind Drive
Bakersfield, CA 93301-3015

Project: AVCCD Health Science Building
Job Number: 05-157
Request Number: 00034
Date: 3/2/2010
Title: Door & Hardware Clarifications

REQUEST:

Door & HW Questions as follows::
1) On the bid forms, alternates are listed under section 01230 yet in the specs the alternate section is 01030?
2) The bid form for Bid Package 3171 on page 3 under alternates references Deduct Alternate 6 for the replacement of card readers with key & Cylinder locks, I believe this should reference Deduct Alternate 8.
3) Alternate 6 states "Change Planetarium doors and frames to standard height" The doors in the planetarium are already a 7' - 0" height per the door schedule. Please clarify what is meant by "standard height."
4) Opening 181A is a single wood door 4/0 x 7/0 assigned to HW group 104. Opening 181B is a pair of wood doors (4/0 and 2/0 x 7/0) also assigned to HW group 104. Opening 181B needs hardware on the inactive leaf. Please clarify.
5) Opening 235E is a non-monitored, keyed lock door assigned to HW group 26. It has an alternate HW group of 36 If addendum 8 is taken. HW group 36 is for a sound control door {which this opening is not} and HW group 26 is a non card reader opening, why would the hardware change?
6) Opening 267 is shown on the door schedule to be a single (3/0 x 7/0) STC 50, exterior HM door with an aluminum storefront frame with details 1, 18, and 10/A8.11. The details show the door to be aluminum. You cannot have an STC rated aluminum door or frame. Please clarify.
7) According to the door schedule Opening 211A is a pair of wood doors assigned to HW group 14. The floor plans shows this opening to be a single door from nurse station 211G to electrical room 2118. Please clarify.
8) Since bid package 3195 is responsible for the door hardware for its own products (except cylinders and cores). Which bid package is responsible for the card readers at storefront locations?
9) Door manufacturers of STC rated wood doors only provide seal and automatic door bottoms with the wood doors. They do not provide hinges or thresholds. HW groups 2, 6, 8, 9, 13, 15, 16, 17, 33,34, 36, 39, 41, 43, 45, 48, 50, 60, 68, 69, 82, 84, 85, 88, 89, 90, 91, 93, 99, 102, 103, 104, 108, 110, 111, 113 all are for STC rated wood doors and do not have any hinges or thresholds (if required) and all state -'balance of hardware by acoustic door manufacturer". If the door manufacturer is not providing these materials, who is responsible for them? Please clarify.

Signed: _____
Chris Klassen

ANSWER:

See responses on page 2

Signed: Mark Held
Mark Held 3/4/10

Status: NEW **Ball In Court:** Jim Pan **Due Date:** 3/9/2010

TBP Response 3/4/10

1) The alternate section is 01030. The bid forms are incorrect and should read 01030.
2) Replacement of card readers with key & cylinder locks is alternate #8. The bid form for package 3171 is incorrect.
3) Doors 181-A, B, C, & D should be 7'-10" high as part of the base bid. For Alternate # 6, they should be 7'-0" high. I have changed the door schedule to reflect this, as part of addendum #2.
4) 181B will use hardware set #117 (new addition to addendum #2)
5) For door 235E, both the base bid and alternate should use HW set #26.
6) Door #267 is insulated hollow metal, per the door schedule. The details are meant to show the frame condition, the construction of the door is governed by the door schedule.
7) The door schedule is incorrect. Door #211A should be a 3'-0" wide door, type "H".
8) Klassen Corp. to clarify scope of bid packages.
9) If the door manufacturer does not provide hinges and thresholds, then it is the responsibility of the contractor to provide them.

Klassen corporation
2021 Westwind Drive Bakersfield CA 93301
Phone: 661.324.3000 Fax: 661.324.3900

Pre Bid Request For Information

To: Jim Pan
tBP/Architecture
5455 Wilshire Blvd., Ste. 1200
Los Angeles, CA 90036

Phone: 323.556.3788 **Fax:** 323.556.3799

Requested By: Chris Klassen
Klassen Corporation
2021 Westwind Drive
Bakersfield, CA 93301-3015

Project: AVCCD Health Science Building
Job Number: 05-157
Request Number: 00035
Date: 3/2/2010
Title: Room 161 Flooring

REQUEST:

1) Rooms 161 A & C call for floors to be CHT but the color calls out CPT-1.

2) What does the RF-1 in the color selection for rooms 161, 161B typical refer to. Cannot find spec for RF-1.

Please clarify.

Signed: _____
Chris Klassen

ANSWER:

1) Rooms 161 A&C should both have carpet CPT-1 and rubber base RB-1.

2) RF-1 refers to rubber flooring. It can be found in section 09650 on sheet 9.02.

Signed: Mark Held
Mark Held 3/3/10

Status: NEW **Ball In Court:** Jim Pan **Due Date:** 3/9/2010

Klassen corporation
2021 Westwind Drive Bakersfield CA 93301
Phone: 661.324.3000 Fax: 661.324.3900

Pre Bid Request For Information

To: Jim Pan
tBP/Architecture
5455 Wilshire Blvd., Ste. 1200
Los Angeles, CA 90036

Phone: 323.556.3788 **Fax:** 323.556.3799

Requested By: Chris Klassen
Klassen Corporation
2021 Westwind Drive
Bakersfield, CA 93301-3015

Project: AVCCD Health Science Building
Job Number: 05-157
Request Number: 00036
Date: 3/3/2010
Title: HVAC Spec Issues

REQUEST:

1) Is all Stainless (type 304) ductwork that is associated with the Lab Exhaust Fans to be welded throughout the entire building? This is not cost effective. Normally when combined with General Exhaust the duct only needs to be welded to the main trunk line. Trunk lines also are sometimes of standard galvanized sheet metal construction and not required to be stainless steel due to the dilution factor, although the risers may be welded Stainless Steel for any revised or future work.
2) Per Specifications 15810, page 7, Par E, sub par 1, Fume Hood Exhaust System states that "Ductwork shall be a minimum of 22 gage stainless steel (type 304) with welded seams and joints." It is very difficult, if even possible to weld such a light gage metal and needs to be a minimum of 18 gage, 16 gage is recommend.
3) Per Specification section 15080 page 13 Table 15080-3 states that "Supply Air Duct insulation downstream from terminal units to diffuser to be lined with 1" thick acoustical liner." Will lining just the main truck line and not the run outs to diffusers be acceptable?
4) On sheet M2.1 Café/Kitchen area Room 141 shows VAV Box 3-104. No duct layout is shown connecting to this VAV box. Is this to be done in the future?
5) Bid package 3361 refers Sheet Metal this is HVAC Sheet Metal only not General Sheet Metal correct?
The above items 1-3 will have a great cost impact to the project, please advise.

Signed: _____
Chris Klassen

ANSWER:

1) Per specs: Fume hood exhaust system shall be minimum 22 gauge stainless steel. Per dwgs: Ducts required to be stainless steel are noted with * next to size.
2) Specifications are correct.
3) Specifications are correct.
4) Yes, the duct extension is future,
5) Klassen Corp. to clarify scope of bid packages
John Holland/S&K Engineers 3-05-2010

Signed: Mark Held
Mark Held
3/8/10

Status: NEW **Ball In Court:** Jim Pan **Due Date:** 3/10/2010

Klassen corporation
2021 Westwind Drive Bakersfield CA 93301
Phone: 661.324.3000 Fax: 661.324.3900

Pre Bid Request For Information

To: Jim Pan
tBP/Architecture
5455 Wilshire Blvd., Ste. 1200
Los Angeles, CA 90036

Phone: 323.556.3788 **Fax:** 323.556.3799

Requested By: Chris Klassen
Klassen Corporation
2021 Westwind Drive
Bakersfield, CA 93301-3015

Project: AVCCD Health Science Building
Job Number: 05-157
Request Number: 00038
Date: 3/3/2010
Title: CW Glazing Clarifications

REQUEST:

Please clarify the following:
1) A-6.11 Key note 3 indicates not used but it is at least twice on this page alone, detail 1 & 5
2) A-1.01 / A-4.01 Dr #117A elevation indicates "glass door" yet door schedule indicates SCWD
3) A-4.01 elevation puts intermediate horizontal at 9' +/- , 1 & 2 / A6.05 & A-7.18 has it at door header height
4) A6.10 elevation 2 shows a chopped up vertical mullions. With the load requirements, the attachments at the head, sill and mid span verticals will need to run continuous, pre-engineer rough numbers has load bearing verticals loaded with steel. To do any kind of a take-off we're going to need clear detail as to what the intent.
5) Reference Courtyard CW:
A-1.01 GL's 8-12.4, floor plan shows vertical spacing 17 eq @ 4'-6"
A-4.02 same elevation shows 16 equal?
6) 2/A-4.01, the elevation at Grids A-B is unclear and appears to have contradictions on 5/A-6.12. The North Elevation appears to be much clearer, better defined with modules.

Signed: _____
Chris Klassen

ANSWER:

Signed: Mark Held 3/4/10
Mark Held

Status: NEW **Ball In Court:** Jim Pan **Due Date:** 3/10/2010

1) On detail 1, the keynote #3 should be #1. On detail 5, keynote # 3 should be #5.
2) Door 117A is aluminum framed, glass door, type "A".
3) The elevations are correct - the intermediate horizontal should be at 9'-3" AFF
4) Elevation 2/A-6.10 is confusing because of a drafting error - layers are showing up that shouldn't be. On the corrected drawing (addendum #2), you will see that every second or third vertical is continuous from top to bottom. These verticals form the sides of the "modules', which are never more than about 6' wide. Discontinuous verticals transfer their loads to the horizontals, which never span more than a few feet before hitting a continuous vertical.
5) The floor plan is correct - there are 17 space. The elevation has been corrected as part of addendum #2.
6) Elevation 2/A-4.01 seems unclear because the wall at that part of the building is being viewed at an oblique angle, so you are seeing the depth of the vertical fins at an angle, instead of head-on like the other elevations.

Klassen corporation
2021 Westwind Drive Bakersfield CA 93301
Phone: 661.324.3000 Fax: 661.324.3900

Pre Bid Request For Information

To: Jim Pan
tBP/Architecture
5455 Wilshire Blvd., Ste. 1200
Los Angeles, CA 90036

Phone: 323.556.3788 **Fax:** 323.556.3799

Requested By: Chris Klassen
Klassen Corporation
2021 Westwind Drive
Bakersfield, CA 93301-3015

Project: AVCCD Health Science Building
Job Number: 05-157
Request Number: 00039
Date: 3/3/2010
Title: Room 20A1 Rail Detail

REQUEST:

What type of rails are in Room 201A (A-7.20)? Please provide detail of this rail.

Signed: _____
Chris Klassen

ANSWER:

1-1/2" diameter stainless steel handrail. See details 1 and 2, sheet 13.01

Signed: Mark Held
Mark Held 3/4/10

Status: NEW **Ball In Court:** Jim Pan **Due Date:** 3/10/2010

Klassen corporation
2021 Westwind Drive Bakersfield CA 93301
Phone: 661.324.3000 Fax: 661.324.3900

Pre Bid Request For Information

To: Jim Pan
tBP/Architecture
5455 Wilshire Blvd., Ste. 1200
Los Angeles, CA 90036

Phone: 323.556.3788 **Fax:** 323.556.3799

Requested By: Chris Klassen
Klassen Corporation
2021 Westwind Drive
Bakersfield, CA 93301-3015

Project: AVCCD Health Science Building
Job Number: 05-157
Request Number: 00040
Date: 3/3/2010
Title: 12" SOG Dimensions

REQUEST:

Reference Sheet S1.11C:
The dimensions of the 12" S.O.G. are not clear as this is somewhat in the area of the utility trench work. Please advise.

Signed: _____
Chris Klassen

ANSWER:

The 12" slab extends from grid line 15 to 16, and from grid line "C" on the south to the edge of slab on the north.

Signed: Mark Held
Mark Held 3/8/10

Status: NEW **Ball In Court:** Jim Pan **Due Date:** 3/10/2010

Klassen corporation
2021 Westwind Drive Bakersfield CA 93301
Phone: 661.324.3000 Fax: 661.324.3900

Pre Bid Request For Information

To: Jim Pan
tBP/Architecture
5455 Wilshire Blvd., Ste. 1200
Los Angeles, CA 90036

Phone: 323.556.3788 **Fax:** 323.556.3799

Requested By: Chris Klassen
Klassen Corporation
2021 Westwind Drive
Bakersfield, CA 93301-3015

Project: AVCCD Health Science Building
Job Number: 05-157
Request Number: 00041
Date: 3/3/2010
Title: Insulation Ratings

REQUEST:

1) Please clarify R-value requirement at exterior walls. Architectural details indicate R-13 and Title 24 compliance forms (M0.4 – M0.5) indicate R-19.
2) Reference 12/3.01. Please advise what R-value is required for the insulation at the standing seam roof.

Signed: _____
Chris Klassen

ANSWER:

Signed: Jim Pan 3/3/10

Status: NEW **Ball In Court:** Jim Pan **Due Date:** 3/10/2010

1)The Title 24 compliance shows wall insulation of R-19 installed as "cavity" insulation. The Architectural details show R-13 insulation in some places; however, this is not "cavity" insulation, but "continuous" insulation. An R-13 "continuous" insulation has a much higher overall R value of the wall than R-19 "cavity" insulation. Contractor should follow the architectural details during construction.
Manojit Sinha, S&K
2)R19 at standing seam roof.

Klassen corporation
2021 Westwind Drive Bakersfield CA 93301
Phone: 661.324.3000 Fax: 661.324.3900

Pre Bid Request For Information

To: Jim Pan
tBP/Architecture
5455 Wilshire Blvd., Ste. 1200
Los Angeles, CA 90036

Phone: 323.556.3788 **Fax:** 323.556.3799

Requested By: Chris Klassen
Klassen Corporation
2021 Westwind Drive
Bakersfield, CA 93301-3015

Project: AVCCD Health Science Building
Job Number: 05-157
Request Number: 00042
Date: 3/4/2010
Title: GFRC Testing Requirement

REQUEST:

Question from GFRC Bidder:
I had the opportunity to review the specification section related to the referenced product and can assure we can comply to any and all ramifications outlined with the exception of the PCI Plant review.

I have been faced with this stipulation on prior projects, most recent U C Davis, and appealed to the DSA, the Owner, State of California and Architect involved. After our presentation of a specific Quality Control Program and Continuation System the stipulation was dropped and we were awarded the project.

The basis of our argument was that a Public Entity Project subject to "Or Equal" can not be limited to a private certification requirement. The outline certification is based on published National Codes, specifications, independent engineering and testing paid for by the contractor. Thus if substantiated equal the contractor/producer is allowed to perform the work.

Please advise.

Signed: _____
Chris Klassen

ANSWER:

Signed: Jim Pan 3/4/10

Status: NEW **Ball In Court:** Jim Pan **Due Date:** 3/11/2010

PCI is the industrial standard. GFRC panel is differed approval item. PCI's tests and inspection procedure will provide AVC the needed product assurance. I consider the PCI Plant Production QC process is the best practice, and have seen it on all GFRC specs.

Klassen corporation
2021 Westwind Drive Bakersfield CA 93301
Phone: 661.324.3000 Fax: 661.324.3900

Pre Bid Request For Information

To: Jim Pan
tBP/Architecture
5455 Wilshire Blvd., Ste. 1200
Los Angeles, CA 90036

Phone: 323.556.3788 **Fax:** 323.556.3799

Requested By: Chris Klassen
Klassen Corporation
2021 Westwind Drive
Bakersfield, CA 93301-3015

Project: AVCCD Health Science Building
Job Number: 05-157
Request Number: 00043
Date: 3/4/2010
Title: Door HW Assignments

REQUEST:

1) Opening 181C and 181D are shown on the door schedule as single doors assigned to HW group 31. The floor plans confirm that both doors are single openings, but HW group 31 is for pairs of doors. Please clarify.
2) Opening 261A is a wood door which is assigned to HW group 108 (lockset). If alternate 8 is used, this opening changes to HW group 2 (Exit Device). Please confirm that the locking hardware will change on this opening.
3) Opening 133A is a wood door which is assigned to HW group 43 (lockset). If alternate 8 is used, this opening changes to HW group 2 (Exit Device). Please confirm that the locking hardware will change on this opening.
4) Opening I73A is a wood door which is assigned to HW group 103 (Exit). If alternate 8 is used, this opening changes to HW group 8 (Lockset). Please confirm that the locking hardware will change on this opening.
5) Opening 126 is a 3/0 X 7/0 wood door non·STC rated assigned to HW group 38. If alternate 8 is used, this opening changes to HW group 13 (Hardware for STC Door). Please clarify.
6) Opening 235E is a 3/0 X 7/0 wood door non-STC rated assigned to HW group 26. If alternate 8 is used, this opening changes to HW group 36 (Hardware for STC Door). Please clarify.
7) Openings 280 and 280A are 3/0 X 7/0 HM dutch doors Type G door assigned to HW group 57. If alternate 8 is used, this opening changes to HW group 61 (Hardware for Flush Door not Dutch). Please clarify.
8) Opening 101A is a pair of wood doors type L assigned to HW group 50 (hardware for pair doors). If alternate 8 is used, this opening changes to HW group 91 (Hardware for single door). Please clarify.

Signed: _____
Chris Klassen

ANSWER:

Signed: Mark Held
Mark Held 3/8/10

Status: NEW **Ball In Court:** Jim Pan **Due Date:** 3/11/2010

1) For 181C & 181D, use group #10 for both base bid and alternate.
2) Door 261A should be HW set 103 in the base bid.
3) Door 133A should be HW set 008 in the alternate bid.
4) Door 173A should be Hw set 002 in the alternate bid.
5) Door 126 should be HW set 010 in the alternate bid.
6) Door 235E should be HW set 026 in the alternate bid.
7) Doors 280 and 280A should both be HW set 112 in the alternate bid.
8) Door 101A should be HW set 003 for both base bid and the alternate bid.

Klassen corporation
2021 Westwind Drive Bakersfield CA 93301
Phone: 661.324.3000 Fax: 661.324.3900

Pre Bid Request For Information

To: Jim Pan
tBP/Architecture
5455 Wilshire Blvd., Ste. 1200
Los Angeles, CA 90036

Phone: 323.556.3788 **Fax:** 323.556.3799

Requested By: Chris Klassen
Klassen Corporation
2021 Westwind Drive
Bakersfield, CA 93301-3015

Project: AVCCD Health Science Building
Job Number: 05-157
Request Number: 00044
Date: 3/4/2010
Title: Concrete Detail Clarification

REQUEST:

1) Is there a detail for the outside light pole concrete footings?
2) The details for the greenhouse concrete slab on 6/S-5.06A and A-7.42 do not indicate thickness of the slab. Also there is no mention of reinforcement. Please advise size of slab and what if any reinforcing is required.
3) AS-1.01 Legend for Hardwscape: Is the intent for all 4" and 6" site concrete to have a sandblast finish?

Signed: _____
Chris Klassen

ANSWER:

1) The light poles are existing (to remain). No detail required.
2) The greenhouse slab should be 4" thick, with #4 rebar @16" O.C. each way.
3) Yes.

Signed: Mark Held
Mark Held 3/5/10

Status: NEW **Ball In Court:** Jim Pan **Due Date:** 3/11/2010

Klassen corporation
2021 Westwind Drive Bakersfield CA 93301
Phone: 661.324.3000 Fax: 661.324.3900

Pre Bid Request For Information

To: Jim Pan
tBP/Architecture
5455 Wilshire Blvd., Ste. 1200
Los Angeles, CA 90036

Phone: 323.556.3788 **Fax:** 323.556.3799

Requested By: Chris Klassen
Klassen Corporation
2021 Westwind Drive
Bakersfield, CA 93301-3015

Project: AVCCD Health Science Building
Job Number: 05-157
Request Number: 00045
Date: 3/4/2010
Title: Encased Vertical Column Detail

REQUEST:

Please provide a clear detail of how the vertical columns are Encased that sit on the deeper brace frame footings. I am assuming they are encased with some type of concrete pedestal with a minimum coverage around the vertical steel. Maybe 24" square? Please clarify.

Signed: _____
Chris Klassen

ANSWER:

See 4/S-5.07 and/or 1 and 2 on S-5.11.
-Gary Duncan, KPFF 03-05-10

Signed: Mark Held
Mark Held 3/5/10

Status: NEW **Ball In Court:** Jim Pan **Due Date:** 3/11/2010

Klassen corporation
2021 Westwind Drive Bakersfield CA 93301
Phone: 661.324.3000 Fax: 661.324.3900

Pre Bid Request For Information

To: Jim Pan
tBP/Architecture
5455 Wilshire Blvd., Ste. 1200
Los Angeles, CA 90036

Phone: 323.556.3788 **Fax:** 323.556.3799

Requested By: Chris Klassen
Klassen Corporation
2021 Westwind Drive
Bakersfield, CA 93301-3015

Project: AVCCD Health Science Building
Job Number: 05-157
Request Number: 00046
Date: 3/4/2010
Title: Seating Locations

REQUEST:

Please clarify which rooms the seating in section 12610 Fixed Audience Seating is to be installed and which rooms the seating in section 12730 Upholstered Seating is to be installed.

Signed: _____
Chris Klassen

ANSWER:

Fixed Audience Seating is in the planetarium.
Upholstered Seating are the banquettes (benches) in the corridors and cafe/dining area.

Signed: Mark Held
Mark Held 3/4/10

Status: NEW **Ball In Court:** Jim Pan **Due Date:** 3/11/2010

Klassen corporation
2021 Westwind Drive Bakersfield CA 93301
Phone: 661.324.3000 Fax: 661.324.3900

Pre Bid Request For Information

To: Jim Pan
tBP/Architecture
5455 Wilshire Blvd., Ste. 1200
Los Angeles, CA 90036

Phone: 323.556.3788 **Fax:** 323.556.3799

Requested By: Sam Kamand
Klassen Corporation
2021 Westwind Drive
Bakersfield, CA 93301-3015

Project: AVCCD Health Science Building
Job Number: 05-157
Request Number: 00047
Date: 3/5/2010
Title: Generator Specs.

REQUEST:

1) In review of the 16235 Generator specs, the equipment is based on a 2000kw genset and is about 10 years old. The genset area will not fit a walk-in style enclosure or standard sound enclosure. Can the dimensions on sheet E1.1 be changed? Please advise.

2) Reference 16235.2.7.A: What type of shop testing is required?

Signed: _____
Sam Kamand

ANSWER:

1. Unit is 500kw per Addendum #2. Walk-in style enclosure is not required, nor a sound attenuated enclosure. Dimension is based on Caterpillar C18 enclosure.
2. Shop testing shall be designed to demonstrate 500kw load capacity of unit.

L Jung, 3/8/2010

Signed: _____
Jim Pan 3/8/10

Status: NEW **Ball In Court:** Jim Pan **Due Date:** 3/12/2010

Klassen corporation
2021 Westwind Drive Bakersfield CA 93301
Phone: 661.324.3000 Fax: 661.324.3900

Pre Bid Request For Information

To: Jim Pan
tBP/Architecture
5455 Wilshire Blvd., Ste. 1200
Los Angeles, CA 90036

Phone: 323.556.3788 **Fax:** 323.556.3799

Requested By: Sam Kamand
Klassen Corporation
2021 Westwind Drive
Bakersfield, CA 93301-3015

Project: AVCCD Health Science Building
Job Number: 05-157
Request Number: 00048
Date: 3/5/2010
Title: Cable Tray Details

REQUEST:

1) Please provide a spec for cable tray.
2) Please provide a detail for cable tray installation.

Signed: _____
Sam Kamand

ANSWER:

1) Spec section 16134 (Cable Trays) has been provided as part of Addendum #2.

2) Cable tray detail is on D/T-6.01

Signed: Mark Held
Mark Held 3/8/10

Status: NEW **Ball In Court:** Jim Pan **Due Date:** 3/12/2010

Klassen corporation
2021 Westwind Drive Bakersfield CA 93301
Phone: 661.324.3000 Fax: 661.324.3900

Pre Bid Request For Information

To: Jim Pan
tBP/Architecture
5455 Wilshire Blvd., Ste. 1200
Los Angeles, CA 90036

Phone: 323.556.3788 **Fax:** 323.556.3799

Requested By: Sam Kamand
Klassen Corporation
2021 Westwind Drive
Bakersfield, CA 93301-3015

Project: AVCCD Health Science Building
Job Number: 05-157
Request Number: 00049
Date: 3/5/2010
Title: Upholstered Seating Products

REQUEST:

Reference Spec Section 12730.2.1.A: The specification lists American Seating, Geiger or equal but doesn't clarify the basis of design or product.
Please clarify the product requirements for the lecture hall.

Signed: _____
Sam Kamand

ANSWER:

The Basis of design is American Seating Cachet Swing-Away. See drawing A-7.20 and the features on attached cut sheet for more info.

Signed: _____
Jim Pan 3/8/10

Status: NEW **Ball In Court:** Jim Pan **Due Date:** 3/12/2010

Cachet® Swing-Away

Ergonomic Lecture Hall Solution.

Pneumatic height adjustment.

Arms flip up for easy access.

Seats automatically self-center and return to forward position.

Cantilevered table base simplifies floor cleaning.

Flexible, slotted chair surfaces absorb and evenly conform to the body for superior comfort.

Balanced action rocker mechanism automatically adjusts to the way you sit and supports healthy posture.

AMERICANSEATING

Cachet® Swing-Away

Fixed seating with integrated worksurface combines exceptional comfort, style and durability.

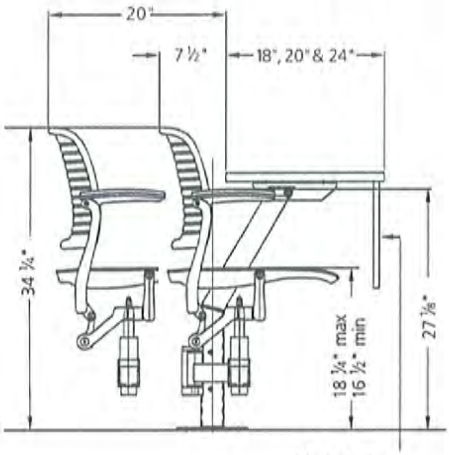

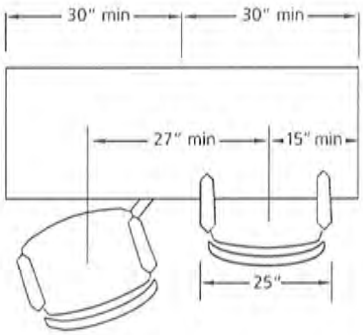

Cachet Swing-Away delivers an exceptionally comfortable fixed seating solution. Chairs automatically self-center, rise to common height, and return to forward position, keeping aisles clear when unoccupied. Sturdy steel legs with cast iron pivots support cantilevered table surface and chairs. The table can accommodate optional power and data modules to support laptop computer use.

Features

- Seat tilts and back articulates to provide unparalleled ergonomic support
- Seat automatically self-centers and returns to forward facing position
- Cantilevered table base allows easy access to floor for cleaning
- Arms flip up for ease of access
- Flexible slotted chair surfaces absorb and evenly distribute body weight
- Pneumatic height adjustment for optimum worksurface orientation
- Table sections can be joined to create an uninterrupted worksurface

Options

- Removable seat and back cushions allow convenient fabric replacement
- Built in power and data ports
- Segmented or continuous modesty panels
- Free-standing Cachet chairs and stools are available through Steelcase distribution

Environmental

- ***Cachet*** is GREENGUARD® indoor air quality certified
- Exceptionally durable and easy to clean for long life
- Glass-filled nylon frame and polypropylene construction is easy to disassemble for recycling
- ***Cachet*** is 99% recyclable

Seats swivel 360°

Optional seat and back cushions allow convenient fabric replacement.

AMERICANSEATING

401 American Seating Center, Grand Rapids, Michigan 49504
(616) 732-6600 (800) 748-0268 Fax (616) 732-6401
www.americanseating.com

® 2005 American Seating Company
Cachet® is a registered trademark of
Steelcase Development Corporation
Form No. ED-CSA-05 Litho USA

Klassen corporation
2021 Westwind Drive Bakersfield CA 93301
Phone: 661.324.3000 Fax: 661.324.3900

Pre Bid Request For Information

To: Jim Pan
tBP/Architecture
5455 Wilshire Blvd., Ste. 1200
Los Angeles, CA 90036

Phone: 323.556.3788 **Fax:** 323.556.3799

Requested By: Sam Kamand
Klassen Corporation
2021 Westwind Drive
Bakersfield, CA 93301-3015

Project: AVCCD Health Science Building
Job Number: 05-157
Request Number: 00050
Date: 3/5/2010
Title: STC Ratings on Storefront

REQUEST:

Please clarify:
1) There appear to be no Acoustical Door & Frame (STC) spec provided.
2) There are some STC openings that are taking a wood door and an aluminum storefront frame; it is our understanding that you cannot get an STC rating on a storefront frame: Openings 182, 186, 186a, 188, 190, 194,278,282.
3) There are some STC openings that are taking a hollow metal door and aluminum storefront frame; it is our understanding that you cannot get an STC rating on a storefront frame: Opening 2567
4) There are some STC openings that are taking an aluminum storefront door and an aluminum storefront frame; it is our understanding that you cannot get an STC rating on a storefront system: Opening 121,177, 194a, 213, 213a

Signed: _____
Sam Kamand

ANSWER:

1) Spec section 08385 (Acoustical Door Assemblies) has been added as part of Addendum #2.
2,3,4) The STC rating should be followed for the door, seals, door bottom, etc. If it is hung in a system (storefront, etc.) that does not support an STC rating, that is acceptable. The goal is to get the best possible sound rating, using the frame system specified.

Signed: Mark Held
Mark Held 3/8/10

Status: NEW **Ball In Court:** Jim Pan **Due Date:** 3/12/2010