GENERAL NOTES

GENERAL

1 ALL WORK SHALL CONFORM TO THE LATEST ADOPTED EDITION OF TITLE 24, CALIFORNIA CODE OF REGULATIONS (CCR), INCLUDING, BUT NOT LIMITED TO, 2007 CALIFORNIA BUILDING STANDARDS ADMINISTRATIVE CODE, SECTION 4-333, 2007 CALIFORNIA BUILDING CODE, AND ALL OTHER APPLICABLE CODES, ORDINANCES, AND REGULATIONS. NOTHING HEREIN SHALL BE INTERPRETED TO THE CONTRARY.

2 CONTRACTOR SHALL OBTAIN AND PAY FOR PERMITS AND INSPECTIONS REQUIRED BY PUBLIC AUTHORITIES GOVERNING THE WORK.

3 CONTRACTOR SHALL REVIEW DOCUMENTS, VERIFY DIMENSIONS AND FIELD CONDITIONS, AND CONFIRM THAT WORK IS BUILDABLE AS SHOWN. REPORT ANY CONFLICTS OR OMISSIONS TO THE ARCHITECT FOR CLARIFICATION PRIOR TO PERFORMING ANY WORK IN QUESTION.

4 CHANGES TO THE APPROVED DRAWINGS AND SPECIFICATIONS SHALL BE MADE BY ADDENDA OR A CHANGE ORDER, AND SHALL BE APPROVED BY DSA (REF. SEC.4-338, PART 1, TITLE 24).

5 CONTRACTOR SHALL SUBMIT REQUESTS FOR SUBSTITUTIONS, REVISIONS, OR CHANGES TO ARCHITECT PRIOR TO PURCHASE, FABRICATION, AND INSTALLATION.

6 THE OWNER AND OTHERS MAY PROVIDE WORK WHEN NOTED "OWNER FURNISHED", "BY OTHERS", OR "NIC" UNDER SEPARATE CONTRACT. COORDINATE WITH OTHERS. INCLUDE SCHEDULE REQUIREMENTS FOR OWNER AND OTHERS IN CONSTRUCTION PROGRESS SCHEDULE AND COORDINATE TO ASSURE ORDERLY SEQUENCE OF INSTALLATION.

7 A CLASS 1 PROJECT INSPECTOR EMPLOYED BY THE OWNER (DISTRICT) AND APPROVED BY THE DIVISION OF THE STATE ARCHITECT (DSA) SHALL PROVIDE CONTINUOUS INSPECTION OF THE WORK. THE DUTIES OF THE INSPECTOR ARE DEFINED IN SECTION 4-342, PART 1, TITLE 24, CCR.

8 IT SHALL BE THE RESPONSIBILITY OF THE CONTRACTOR FOR MEANS, METHODS, TECHNIQUES AND PROCEDURES EMPLOYED IN THE PERFORMANCE OF WORK IN, ON, OR ABOUT THE JOB SITE. THE CONTRACTOR SHALL BE RESPONSIBLE FOR AND SHALL COORDINATE AND VERIFY ALL WORK PERFORMED BY SUB-CONTRACTORS.

9 CIVIL, LANDSCAPE, STRUCTURAL, MECHANICAL, PLUMBING, ELECTRICAL, AUDIO VISUAL, TELECOMMUNICATIONS, ETC. DRAWINGS ARE COMPLEMENTARY TO THE ARCHITECTURAL DRAWINGS. THE CONTRACTOR SHALL REVIEW ALL PLANS AND DRAWINGS. IN THE EVENT OF CONFLICTING STATEMENTS, INSUFFICIENT INFORMATION OR ERRORS, THE CONTRACTOR SHALL IMMEDIATELY NOTIFY THE ARCHITECT & CONSTRUCTION PROJECT MANAGER AND OBTAIN CLARIFICATION BEFORE ANY WORK IS BEGUN. WORK INSTALLED WHERE CONFLICTING CONDITIONS EXIST WITHOUT PROPER PRIOR NOTIFICATION SHALL BE CORRECTED AT CONTRACTOR'S EXPENSE.

10 THE INTENT OF THESE DRAWINGS, PROJECT MANUAL, BULLETINS, ADDENDUMS, CHANGE ORDERS AND SPECIFICATIONS IS TO INCLUDE ALL LABOR, MATERIALS AND SERVICES NECESSARY FOR COMPLETION OF ALL WORK SHOWN, PRESCRIBED, OR REASONABLY IMPLIED BUT NOT LIMITED TO THAT EXPLICITLY INDICATED IN THE CONTRACT DOCUMENTS.

11 THE ARCHITECT SHALL INTERPRET THE INTENT OF THE DOCUMENTS IN THE CASE OF POSSIBLE CONFLICT OR DISCREPANCY BETWEEN DISCIPLINES.

12 UNLESS NOTED OTHERWISE, DIMENSIONS ARE TO FACE OF STUD.
DO NOT SCALE DRAWINGS. VERIFY DIMENSIONS IN THE FIELD BEFORE PROCEEDING WITH ANY WORK.

13 THE CONTRACTOR SHALL BE RESPONSIBLE FOR ACCURATE PLACEMENT OF THE BUILDING/ WORK ON THE SITE.

14 DETAILS NOTED AS TYP. OR TYPICAL APPLY IN ALL CASES WHETHER OR NOT SPECIFICALLY REFERENCED.

15 WHENEVER AN ITEM, ARTICLE, DEVICE, OR PIECE OF EQUIPMENT IS SHOWN, INDICATED, OR REFERRED TO ON THE DRAWINGS OR THESE NOTES IN THE SINGULAR NUMBER, SUCH REFERENCES APPLY TO AS MANY SUCH ARTICLES AS ARE REQUIRED TO COMPLETE THE INSTALLATION.

16 MOUNTING HEIGHTS: WHERE MOUNTING HEIGHTS ARE NOT INDICATED, MOUNT INDIVIDUAL UNITS OF WORK AT MOUNTING HEIGHTS AS LISTED IN APPLICABLE CODES. REFER QUESTIONABLE MOUNTING HEIGHT CHOICES TO ARCHITECT FOR FINAL DECISION.

17 ALL ITEMS INDICATED ARE NEW & PROVIDED AS PART OF THIS PROJECT EXCEPT AS SPECIFICALLY IDENTIFIED.

18 STRUCTURAL MODIFICATION SHALL NOT BE DONE BEFORE WRITTEN APPROVAL BY THE ARCHITECT, STRUCTURAL ENGINEER OF RECORD, AND THE D.S.A.. UNLESS SPECIFICALLY SHOWN OR NOTED ON THE DRAWINGS, NO STRUCTURAL MEMBER SHALL BE CUT, NOTCHED, BORED, WELDED, OR OTHERWISE MODIFIED WITHOUT THE PERMISSION OF THE STRUCTURAL ENGINEER OF RECORD.

19 COORDINATE STRUCTURAL DETAILS AND DIMENSIONS WITH RELATED REQUIREMENTS ON OTHER DRAWINGS.

20 THE STRUCTURE IS DESIGNED AS A STABLE UNIT AFTER ALL COMPONENTS ARE IN PLACE. THE CONTRACTOR SHALL DESIGN AND PROVIDE ALL SHORING AND BRACING NECESSARY TO ENSURE THE STABILITY OF ANY AND ALL PARTS OF THE BUILDING DURING CONSTRUCTION.

21 PROVIDE PROPER ANCHORAGE OF ESSENTIAL EQUIPMENT IN ACCORDANCE WITH APPLICABLE CODES.

22 PROVIDE BACKING/BLOCKING IN WALLS FOR ALL ATTACHMENTS AND ACCESSORIES SUCH AS TOILET ACCESSORIES, GRAB BARS, CABINETS, MIRRORS, ETC.

23 COMPLY WITH MANUFACTURER'S APPLICABLE INSTRUCTIONS AND RECOMMENDATIONS FOR INSTALLATION, TO EXTENT THESE ARE MORE EXPLICIT OR MORE STRINGENT THAN REQUIREMENTS INDICATED IN CONTRACT DOCUMENTS.

24 NEITHER THE ARCHITECT'S REVIEW NOR APPROVAL OF SHOP DRAWINGS SHALL RELIEVE THE CONTRACTOR FROM RESPONSIBILITY FOR DEVIATIONS FROM DRAWINGS OR SPECIFICATIONS.

25 PRE-MANUFACTURED GREENHOUSE CONTRACTOR SHALL SUBMIT DESIGN CALCULATIONS IN ACCORDANCE TO THE 2007 CBC, SIGNED AND STAMPED BY A CALIFORNIA REGISTERED CIVIL ENGINEER FOR APPROVAL BY THE STRUCTURAL ENGINEER.

26 CONTRACTOR SHALL BE RESPONSIBLE FOR OBTAINING AND PAYING FOR ALL REQUIRED PERMITS, INCLUDING TRAFFIC, TRAFFIC SIGNAL, AND STREET LIGHTING INCLUDING PAYING ALL ASSOCIATED COSTS.

27 NO CONNECTION (WELD, SHOTPIN, SCREW, ETC.) TO STRUCTURAL BRACES AND/OR GUSSET PLATES IS PERMISSIBLE UNLESS NOTED OTHERWISE ON THE STRUCTURAL DRAWINGS

SITE & ACCESS

1 VERIFY ALL EXISTING & FINISH GRADES, DIMENSIONS & CONDITIONS AT THE SITE BEFORE COMMENCING WORK AND REPORT ANY DISCREPANCIES TO THE ARCHITECT & CONSTRUCTION PROJECT MANAGER.

2 ALL GRADING WORK, DRAINAGE IMPROVEMENTS, ROAD AND ACCESS REQUIREMENTS, AND ENVIRONMENTAL HEALTH CONSIDERATIONS SHALL CONFORM TO APPLICABLE PROVISIONS OF THE CBC, TITLE 24, AND LOCAL CODES OR ORDINANCES. IN THE EVENT OF CONFLICTING PROVISIONS, ALWAYS CONFORM TO THE STRICTER REQUIREMENTS.

3 DETERMINE NECESSARY SUB GRADE ELEVATIONS &CONSTRUCT SMOOTH TRANSITIONS BETWEEN FINISHED GRADES.

4 DURING PERIODS OF PARTIAL OR RESTRICTED USE OF A BUILDING, SITE, OR FACILITY, THE ENTRANCES USED FOR PRIMARY ACCESS SHALL BE ACCESSIBLE TO AND USABLE BY PERSONS WITH DISABILITIES.

5 SITE IMPROVEMENTS IN THE ACCESSIBLE PATH OF TRAVEL SHALL PROVIDE A BARRIER-FREE ACCESS WITHOUT ANY ABRUPT VERTICAL CHANGES EXCEEDING 1/4", OR 1/2" WHEN BEVELED 1:2. WALKWAYS SHALL HAVE A MAXIMUM SLOPE OF 1:20. (MAX. 1/4" IN 12" CROSS SLOPE)

6 LOCATIONS OF ALL UTILITIES SHOWN ARE APPROXIMATE. CONTRACTOR SHALL EXERCISE EXTREME CAUTION IN EXCAVATING AND TRENCHING TO AVOID INTERCEPTING EXISTING PIPING OR CONDUITS. THE ARCHITECT IS NOT RESPONSIBLE FOR THE LOCATION OF UNDERGROUND UTILITIES OR STRUCTURES WHETHER OR NOT SHOWN OR DETAILED AND INSTALLED BY OTHER CONTRACTS. THE CONTRACTOR SHALL IMMEDIATELY NOTIFY THE ARCHITECT, OWNER, & CONSTRUCTION PROJECT MANAGER SHOULD SUCH UNIDENTIFIED CONDITIONS BE DISCOVERED. THE CONTRACTOR IS RESPONSIBLE TO VERIFY LOCATION OF ALL SITE UTILITIES AND TO COORDINATE AND AVOID CONFLICT IN THE LOCATIONS OF NEW UNDERGROUND AND SITE UTILITIES. THE CONTRACTOR SHALL INCLUDE ALL NECESSARY UTILITY FEES, METERS/ AND CONNECTIONS IN HIS BID.

7 A MINIMUM OF 48-HOUR PRIOR NOTICE SHALL BE GIVEN TO THE OWNER & CONSTRUCTION PROJECT MANAGER BY THE CONTRACTOR PRIOR TO ANY REQUIRED INTERRUPTION OF OR REMOVAL OF ANY UTILITY SERVICE SERVING THE EXISTING FACILITY. COORDINATE WITH THE OWNER, CONSTRUCTION PROJECT MANAGER, AND THE APPLICABLE UTILITY COMPANY, AS MAY BE NECESSARY, SUCH WORK AS IT RELATES TO THE NEW OR EXISTING WORK.

8 "GATES ARE TO REMAIN UNLOCKED IN THE OPEN POSITION DURING BUSINESS/ SCHOOL HOURS OR DURING ANY PUBLIC FUNCTIONS." A SIGN STATING THE PREVIOUS WORDS IN 1" HIGH CAPITAL LETTERS SHALL BE POSTED AT EACH GATE ON THE SITE.

9 IF REQUIRED, IT SHALL BE THE RESPONSIBILITY OF THE CONTRACTOR TO PREPARE, FILE, AND IMPLEMENT PM 10 PLANS TO CONTROL DUST EMISSIONS AS REQUIRED BY AQMD.

10 ALL EXISTING AND NEW TRENCHES SHALL BE SLURRIED, BACKFILLED & COMPACTED PER DETAILS AND REQUIREMENTS ON CIVIL AND ELECTRICAL DRAWINGS & SPECIFICATIONS. ALL EXISTING AND NEW TRENCHES AT AC PAVED AREAS SHALL RECEIVE AC PAVING AND BASE TO MATCH ADJACENT SURFACES.

THE CONTRACTOR IS RESPONSIBLE FOR MAINTAINING ADEQUATE DRAINAGE DURING CONSTRUCTION. CONTRACTOR SHALL PROVIDE A STORM WATER MANAGEMENT PLAN ACCEPTABLE TO THE APPLICABLE LOCAL AUTHORITY HAVING JURISDICTION.

ALL TRAFFIC PAVEMENT MARKINGS SHALL BE PER CAL-TRANS STANDARDS INCLUDING BUT NOT LIMITED TO: CAL-TRANS, TRAFFIC MANUAL, CHAPTER 6 - MARKINGS.

11 THE SOILS/GEOTECHNICAL REPORT BY EARTH SYSTEMS SOUTHERN CALIFORNIA & DATED 2/28/2008, IS AVAILABLE FOR REFERENCE AND COPIES MAY BE OBTAINED FROM THE OWNER & CONSTRUCTION PROJECT MANAGER.

12 SCREENS, BARRICADES, OR FENCES MADE OF MATERIAL WHICH PRECLUDE HUMAN CLIMBING SHALL BE PROVIDED AT EVERY PORTION OF EVERY ROOF, BALCONY, OR SIMILAR SURFACE WHICH IS WITHIN 8' OF ANY UTILITY POLE OR SIMILAR CLIMBABLE STRUCTURE.

QUALITY

1 COMPLY WITH THE PROVISIONS FOR QUALITY AS SPECIFIED IN THE PROJECT MANUAL.

2 ALL WALLS, DOORS AND THEIR RELATED FRAMES, AND WINDOWS AND THEIR RELATED FRAMES SHALL BE PLUMB, STRAIGHT, AND CORRECTLY ALIGNED, TYPICAL.

3 ALL WALLS, CEILINGS AND MISCELLANEOUS ITEMS SUCH AS COLUMN ENCLOSURES, HANDRAILS, SOFFITS, AND PREVIOUSLY PAINTED ITEMS, SHALL RECEIVE PAINT, WHETHER INDICATED OR NOT. EXCEPTION: UNLESS NOTED OTHERWISE, DO NOT PAINT UNPAINTED CONCRETE, UNPAINTED MASONRY, CASEWORK, OR FACTORY FINISHED ITEMS SUCH AS LIGHT FIXTURES, CARPET, COVERPLATES, GRILLES, FIXTURES, NEW CEILING TILES, ETC.

4 WOOD CONSTRUCTION WHERE IN CONTACT WITH SOIL SHALL BE PRESSURE-TREATED.

5 ALL TRIM AND EXPOSED CORNER DETAILS SHALL HAVE MITERED JOINT CONNECTIONS, UNLESS NOTED OTHERWISE.

6 ALL DISSIMILAR METALS SHALL BE EFFECTIVELY ISOLATED FROM EACH OTHER TO PREVENT CORROSION (GALVANIC ACTION).

GENERAL NOTES

7 WORK WHICH DOES NOT COMPLY WITH QUALITY AND WORKMANSHIP STANDARDS AS SPECIFIED AND AS RECOGNIZED IN THE CONSTRUCTION INDUSTRY FOR APPLICATIONS INDICATED SHALL BE REPLACED. REMOVE AND REPLACE OTHER WORK DETERIORATED OR DAMAGED BY FAULTY WORKMANSHIP OR ITS REPLACEMENT.

8 PROVIDE CONNECTION & ATTACHMENT DEVICES & METHODS FOR SECURING WORK PROPERLY AS IT IS INSTALLED: TRUE TO LEVEL AND IN-LINE, WITHIN RECOGNIZED INDUSTRY TOLERANCES, AND TO CODE IF NOT OTHERWISE INDICATED. ALLOW FOR BUILDING MOVEMENT AND EXPANSIONS. UNIFORM JOINT WIDTHS IN EXPOSED WORK, ORGANIZED FOR BEST POSSIBLE VISUAL EFFECT SHALL BE PROVIDED. QUESTIONABLE VISUAL-EFFECTS CHOICES SHALL BE REFERED TO THE ARCHITECT FOR FINAL DECISION.

9 ALL AREAS IN WHICH WORK IS DONE SHALL BE LEFT CLEAN AND IN GOOD REPAIR. ANY DAMAGE DONE TO THE EXISTING BUILDING OR SITE BY THE CONTRACTOR OR ANY OF HIS SUBCONTRACTORS OR EMPLOYEES SHALL BE REPAIRED TO THE SATISFACTION OF THE OWNER & CONSTRUCTION PROJECT MANAGER AND AT NO COST TO THE OWNER. FINAL CLEANING MUST BE DONE TO THE OWNER & CONSTRUCTION PROJECT MANAGER'S SATISFACTION AND SHALL INCLUDE, BUT NOT BE LIMITED TO, CLEANING OF EXISTING LIGHT FIXTURES AND LAMPS AND REMOVAL OF TEMPORARY PROTECTION DEVICES. SEE SPECIFICATIONS FOR ADDITIONAL FINAL CLEANING REQUIREMENTS.

WALLS & CEILINGS

1 GYPSUM BOARD, LATHING, PLASTERING AND SUSPENDED CEILING SYSTEMS SHALL CONFORM TO CBC CHAPTER 25

2 SEE WALL TYPES, LEGENDS, DETAILS, SECTIONS, ROOM FINISH SCHEDULE OR CALL-OUTS ON PLANS FOR WALL FRAMING MEMBERS, FIRE RATINGS, GYPSUM BOARD THICKNESS AND OTHER WALL CONSTRUCTION MATERIALS.

3 WHETHER OR NOT DETAILED ON THE DRAWINGS, THE CONTRACTOR SHALL PROVIDE AND INSTALL HEAVIER GAUGE STUDS, STIFFENERS, BACKING, BRACING, AND SUPPORTING BRACKETS REQUIRED FOR THE INSTALLATION OF ALL CASEWORK AND OF ALL WALL-MOUNTED OR SUSPENDED EQUIPMENT. PROVIDE STEEL BACKING PLATES IN WALLS FOR ATTACHMENT OF ALL WALL-MOUNTED ITEMS, INCLUDING BUT NOT LIMITED TO CABINETS, HANDRAILS AND TOILET ROOM ACCESSORIES.

4 PROVIDE DEEPER STUDS WHERE PLUMBING, BRACING, ELECTRICAL PANELS, AND TOILET ROOM ACCESSORIES OCCUR IN WALLS OR AS OTHERWISE NOTED. VERIFY W/ DRAWINGS FOR LOCATION OF THESE WALLS.

5 ALL GYPSUM BOARD USED IN JANITOR'S ROOMS AND ALL TOILET ROOMS SHALL BE WATER RESISTANT EXCEPT AT CEILINGS PER CBC SECTION 2509.3

6 FINISH CEILINGS SHALL BE FLUSH AND LEVEL, UNLESS NOTED OTHERWISE.

7 LOCATE REGISTERS AND LIGHTING FIXTURES WITHIN GRID LINES. CENTER SPRINKLER HEADS, SPRINKLERS, RECESSED FIXTURES, SURFACES MOUNTED FIXTURES, AND SIMILAR CEILING ELEMENTS IN SUSPENDED CEILING ACOUSTICAL UNITS, UNLESS NOTED OTHERWISE.

8 FINISH HVAC DIFFUSERS, DRAPERY POCKETS, AND SPEAKER GRILLES TO MATCH ADJACENT FINISHES UNLESS NOTED OTHERWISE. SEE DRAWINGS, SPECIFICATIONS, AND SCHEDULES FOR ADDITIONAL FINISH INFORMATION.

CORRIDORS

1 MINIMUM CORRIDOR WIDTH SHALL BE 44" CLEAR. ELECTRICAL CABINETS, WAINSCOT, ETC. SHALL NOT PROJECT INTO THIS CLEAR DIMENSION.

2 CORRIDOR WALLS SHALL EXTEND FROM FINISHED FLOOR TO STRUCTURE ABOVE, UNLESS SPECIFICALLY SHOWN TO TERMINATE AT RATED CEILINGS. SEE DRAWINGS FOR ADDITIONAL INFORMATION.

DOORS & WINDOWS

1 GLAZED OPENINGS WITHIN 40" OF THE DOOR LOCK WHEN THE DOOR IS IN THE CLOSED POSITION, SHALL BE FULLY TEMPERED GLASS OR SAFETY GLASS.

2 DOOR STOPS OF IN-SWINGING DOORS SHALL BE OF ONE-PIECE CONSTRUCTION WITH THE JAMB OR JOINED BY RABBET TO THE JAMB UNLESS INDICATED OTHERWISE. SEE DOOR SCHEDULES, HARDWARE TYPES, AND HARDWARE SPECIFICATIONS FOR SPECIFIC REQUIREMENTS.

3 ALL PIN-TYPE HINGES WHICH ARE ACCESSIBLE FROM OUTSIDE THE SECURED AREA WHEN THE DOOR IS CLOSED SHALL HAVE NON- REMOVABLE HINGE PINS. IN ADDITION, THEY SHALL HAVE MINIMUM 1/4" DIAMETER STEEL JAMB STUD WITH 1/4" MINIMUM PROTECTION UNLESS THE HINGES ARE SHAPED TO PREVENT REMOVAL OF THE DOOR IF THE HINGES PINS ARE REMOVED.

4 THE STRIKE PLATE FOR LATCHES AND THE HOLDING DEVICE FOR PROJECTING DEADBOLTS IN WOOD CONSTRUCTION SHALL BE SECURED TO THE JAMB AND THE WALL FRAMING WITH SCREWS NOT LESS THAN 2 1/2" IN LENGTH.

5 DEADBOLTS SHALL HAVE HARDENED INSERTS; DEADLOCKING LATCH KEY-OPERATED LOCKS ON EXTERIOR; LOCKS OPENABLE WITHOUT KEY, SPECIAL KNOWLEDGE OR EFFORT ON INTERIOR.

6 STRAIGHT DEADBOLTS SHALL HAVE A MINIMUM THROW OF 1" AND AN EMBEDMENT OF NOT LESS THAN 5/8".

7 A HOOK-SHAPED OR AN EXPANDING-LUG DEADBOLT SHALL HAVE A MINIMUM THROW OF 3/4".

8 CYLINDER GUARDS SHALL BE INSTALLED ON ALL CYLINDER LOCKS WHENEVER THE CYLINDER PROJECTS BEYOND THE FACE OF THE DOOR OR IS OTHERWISE ACCESSIBLE TO GRIPPING TOOLS.

9 SECURE INACTIVE LEAF OF DOUBLE DOOR AND UPPER LEAF OF DUTCH DOOR.

10 SLIDING GLASS DOORS & WINDOWS SHALL BE EQUIPPED WITH LOCKING DEVICES & SHALL BE SO CONSTRUCTED & INSTALLED THAT THEY REMAIN INTACT AND ENGAGED WHEN SUBJECTED TO SPECIFIED TESTS.

11 SLIDING DOORS & WINDOWS SHALL BE PROVIDED WITH A DEVICE IN THE UPPER CHANNEL OF THE MOVING PANEL TO PROHIBIT RAISING & REMOVING OF THE MOVING PANEL IN THE CLOSED OR PARTIALLY OPEN POSITION.

12 OTHER OPENABLE WINDOWS SHALL BE PROVIDED WITH SUBSTANTIAL LATCHING DEVICES.

13 EXIT DOORS SHALL BE OPENABLE FROM THE INSIDE WITHOUT THE USE OF A KEY OR ANY SPECIAL KNOW-LEDGE OR EFFORT. MANUALLY OPERATED EDGE-MOUNTED OR SURFACE-MOUNTED FLUSH BOLTS AND SURFACE BOLTS ARE PROHIBITED. THE UNLATCHING OF ANY LEAF OF AN EXIT DOOR SHALL NOT REQUIRE MORE THAN ONE OPERATION.

14 HAND ACTIVATED DOOR OPENING HARDWARE SHALL BE LOCATED BETWEEN 30-IN. AND 44-IN. ABOVE THE FLOOR. LATCHING AND LOCKING DOORS THAT ARE HAND ACTIVATED AND WHICH ARE IN A PATH OF TRAVEL, SHALL BE OPERABLE WITH A SINGLE EFFORT BY LEVER TYPE HARDWARE, BY PANIC BARS, PUSH-PULL ACTIVATED BARS OR OTHER HARDWARE DESIGNED TO PROVIDE PASSAGE WITHOUT REQUIRING THE ABILITY TO GRASP THE OPENING HARDWARE.

15 MAXIMUM EFFORT TO OPERATE DOORS SHALL NOT EXCEED 8.5 POUNDS FOR EXTERIOR DOORS AND 5 POUNDS FOR INTERIOR DOORS, SUCH PULL OR PUSH EFFORT BEING APPLIED AT RIGHT ANGLES TO HINGED DOORS AND AT THE CENTER PLANE OF SLIDING OR FOLDING DOORS. COMPENSATING DEVICES OR AUTOMATIC DOOR OPERATORS MAY BE UTILIZED TO MEET THE ABOVE STANDARDS. WHEN FIRE DOORS ARE REQUIRED, THE MAXIMUM EFFORT TO OPERATE THE DOOR MAY BE INCREASED NOT TO EXCEED 15 POUNDS.

16 THE FLOOR OR LANDING SHALL NOT BE MORE THAN 1/2 INCH LOWER THAN THE THRESHOLD OF THE DOORWAY WITH 1/4" MAXIMUM VERTICAL RISE AND 1/4" MAXIMUM BEVELED PORTION.

17 THE WIDTH OF THE REQUIRED LEVEL AREA ON THE SIDE INTO WHICH THE DOOR SWINGS SHALL EXTEND 24 INCHES PAST THE STRIKE EDGE FOR EXTERIOR DOOR & 18 INCHES PAST THE STRIKE EDGE FOR INTERIOR DOORS.

18 BOTTOM RAIL OF DOORS TO BE 10" (MIN).

GLASS & GLAZING

1 ALL GLAZING INSTALLED IN AND WITHIN 40" OF DOORS AND WHERE REQUIRED BY THE CBC SHALL BE FULLY TEMPERED OR SAFETY GLASS. ALL GLAZING OCCURRING IN FIRE RATED PARTITIONS SHALL BE UL LISTED FIRE RATED GLAZING. ALL GLAZING SHALL COMPLY WITH STANDARDS OF THE U.S. CONSUMER PRODUCTS SAFETY COMMISSION. SEE WINDOW AND DOOR SCHEDULES.

2 INSTALLATION OF GLASS SHALL CONFORM TO FEDERAL SPECIFICATION 16-CFR-1202 AND ALL LOCAL CODES AND ORDINANCES. GLASS SUBJECT TO HUMAN IMPACT SHALL COMPLY WITH U.S. CONSUMER PRODUCT SAFETY STANDARDS. A CERTIFICATE SHALL ACCOMPANY PRODUCT STATING DATE AND PLACE OF MANUFACTURE. ALL GLAZING SHALL BE TEMPERED AS REQUIRED BY CHAPTER 24 OF THE CBC.

FLOORS & WALKS

1 THE SURFACE OF THE FLOORS SHALL BE SLIP-RESISTANT. WALKS UNLESS INDICATED OTHERWISE SHALL BE AS SLIP-RESISTANT AS A MEDIUM SALTED FINISH. SEE DRAWINGS & SPECS FOR WALK FINISHES.

2 FLOOR COVERING PREPARATION: CONTRACTOR SHALL EXAMINE FLOOR SLAB AND DETERMINE THE ACCEPTABILITY TO RECEIVE ALL OF THE FINISH FLOORING MATERIALS AS DESCRIBED. CONTRACTOR SHALL PERFORM ADDITIONAL CLEANING, SCRAPING AND FILLING AS MAY BE NECESSARY FOR THE PROPER APPLICATION OF THE VARIOUS MATERIALS, PER MANUFACTURER'S RECOMMENDATIONS, SHOULD UNACCEPTABLE CONDITIONS EXIST.

3 ENSURE PROPER ADHESION OF THE RUBBER ONE PIECE NOSING-TREAD-RISERS TO STAIR TREADS, RISERS, AND FLOOR SUBSTRATE. VERTICAL FACE SHALL BE ADHERED PROPERLY TO PREVENT TRIPPING HAZARD. CONSULT MANUFACTURER AS REQUIRED FOR PROPER INSTALLATION PROCEDURES IN PREPARING STAIR SURFACES PRIOR TO INSTALLATION OF NOSING.

4 AT CONCRETE WALKS TYPICALLY PROVIDE EDGED CONTROL JOINTS AT 10' O.C. MAX AND EDGED EXPANSION JOINTS AT 20' O.C MAX UNLESS NOTED OTHERWISE. TYPICALLY PROVIDE EXPANSION JOINTS BETWEEN WALKS AND VERTICAL SURFACES, WALLS, AND FACE OF BUILDINGS. SEE PLANS FOR ADDITIONAL INFO.

5 ALL BUILDING FLOOR SLABS OF REINFORCED CONCRETE SHALL BE SET OVER SPECIFIED VAPOR RETARDER, OVER 2" SAND, OVER OVER MINIMUM 4" OF ¾" INCH FREE DRAINING GRAVEL, OVER COMPACTED SUBGRADE.

MECHANICAL, PLUMBING, ELECTRICAL

1 ALL ELECTRICAL, MECHANICAL AND PLUMBING WORK SHALL CONFORM TO THE REQUIREMENTS OF ALL LEGALLY CONSTITUTED AUTHORITIES HAVING JURISDICTION. ALL REFERENCES TO MOUNTING HEIGHTS SHALL CONFORM TO THE LATEST REQUIREMENTS OF ALL APPLICABLE CODES INCLUDING BUT NOT LIMITED TO TO THE CALIFORNIA ELECTRICAL CODE, CALIFORNIA BUILDING CODE, CALIFORNIA MECHANICAL CODE, CALIFORNIA PLUMBING CODE, CALIFORNIA FIRE CODE, CALIFORNIA TITLE 24 REGULATIONS & ORDINANCES, ADA, AND AUTHORITIES HAVING JURISDICTION UNLESS NOTED OTHERWISE.

2 ELECTRICAL RECEPTACLES (15, 20 AND 30 AMPS) SHALL BE MOUNTED PER CODE & AT LEAST +15 INCHES ABOVE THE FINISHED FLOOR TO THE BOTTOM OF THE OUTLETS UNLESS NOTED OTHERWISE. SEE ELECTRICAL DRAWINGS & SPECS.

3 SWITCHES AND CONTROLS FOR LIGHTS, APPLIANCES, HEATING, COOLING, AND VENTILATING EQUIPMENT SHALL BE MOUNTED PER CODE & AT + 48" A.F.F. OR +46" A.F.F. WHEN INSTALLED OVER A MAXIMUM 24" WIDE OBSTRUCTION UNLESS NOTED OTHERWISE. SEE ELECTRICAL DRAWINGS & SPECIFICATIONS.

4 MANUAL FIRE ALARM INITIATING DEVICES (PULL STATIONS) SHALL BE MOUNTED PER CODE & +48" MAX. ABOVE THE FINISHED FLOOR, GROUND OR SIDEWALK. SEE ELECTRICAL/FIRE ALARM DRAWINGS & SPECIFICATIONS.

GENERAL NOTES

5 DO NOT INSTALL OUTLET BOXES BACK-TO-BACK. SEPARATE BOXES BY AT LEAST 6". IN FIRE RATED WALLS SEPARATE BOXES BY AT LEAST 24 INCHES AND WALL STUD.

6 PROVIDE ACOUSTIC PAD OR MEMBRANE AROUND OUTLET BOXES AND SWITCHES LOCATED IN ACOUSTIC WALLS, PARTY WALL OF OFFICES, MEETING ROOMS, AND ALL QUIET SPACES,

7 LOWEST ANTICIPATED SERVICE TEMPERATURE IS 50° F. TEMPERATURE DIFFERENTIAL IN THE CONDITIONED SPACE SHALL NOT EXCEED 30° F OVER THE LIFE OF THE BUILDING, INCLUDING WEEKENDS AND HOLIDAYS.

FIRE & EXITING

1 THE BUILDING SHALL BE FULLY SPRINKLERED. AUTOMATIC SPRINKLER SYSTEMS SHALL COMPLY WITH THE REQUIREMENTS OF C.B.C. SECTION 903. PENETRATIONS OF RATED ASSEMBLIES SHALL BE FIRESTOPPED. FIRESTOPPING SHALL BE AN APPROVED MATERIAL AS PRESCRIBED IN STATE FIRE MARSHAL STANDARD 43-1. THE FIRE SPRINKLER SYSTEM ABOVE GROUND PIPING SYSTEM SHALL NOT BE INSTALLED UNTIL SIGNED ENGINEERING CALCULATIONS, DETAILED PLANS, SPECIFICATIONS AND EQUIPMENT SUBMITTALS HAVE BEEN SUBMITTED, REVIEWED AND APPROVED BY THE ENGINEER, ARCHITECT, AND I.O.R. (ALLOW 60 DAYS FOR APPROVAL).

2 PROVIDE KNOX BOX(ES) AS REQUIRED BY LOCAL FIRE DEPARTMENT. COORDINATE KNOX BOX(ES) AND KNOX BOX(ES) LOCATIONS WITH LOCAL FIRE DEPARTMENT AND OWNER.

31 LOCATION OF FIRE EXTINGUISHERS SHALL BE AS REQUIRED BY THE LOCAL FIRE DEPARTMENT. SEE PLANS FOR MORE INFORMATION.

4 PROVIDE FIRESTOPPING PER CHAPTER 7 OF CBC, AND DRAFT STOPS IF REQUIRED PER CHAPTER 7 OF CBC. FIRESTOPPING (FIREBLOCKING) SHALL BE PROVIDED TO CUT OFF ALL CONCEALED DRAFT OPENINGS (BOTH HORIZONTAL AND VERTICAL AT 10'-0" TYPICAL).

5 FIRESTOPPING: MAINTAIN INTEGRITY OF FIRE RATED WALLS/SLABS BY PROVIDING FIRE SAFING MATERIAL AT GAPS AND VOIDS CREATED BY PENETRATIONS, STRUCTURAL MEMBERS, AND INTERSECTIONS WITH ADJACENT SURFACES. PACK ALL GAPS GREATER THAN 3/4" WITH "BLANKET" TYPE SAFING; PROVIDE FIRE STOP SEALANT AT ALL JOINTS AND VOIDS LESS THAN 3/4" CLEAR. ALL MATERIAL SHALL BE U.L., S.F.M. OR D.S.A. APPROVED, AND CAPABLE OF PREVENTING PASSAGE OF FLAMES AND HOT GASSES WHEN SUBJECTED TO REQUIREMENTS OF CBC CHAPTER 7. SEE DRAWINGS AND SPECS FOR MORE INFORMATION.

6 ILLUMINATED EXIT SIGNS SHALL BE PROVIDED AT ALL REQUIRED EXIT DOORS AND IN OTHER LOCATIONS WHERE REQUIRED BY, AND IN ACCORDANCE WITH, APPLICABLE LAWS. THE PRINCIPAL STROKE OF SUCH SIGNS SHALL BE NOT LESS THAN 3/4" WIDE AND 6" TALL. SEE DRAWINGS AND SPECS FOR MORE INFORMATION.

7 PROVIDE A PORTABLE FIRE EXTINGUISHER WITH A RATING OF NOT LESS THAN 2-A 10BC WITHIN 75 FOOT TRAVEL DISTANCE TO ALL PORTIONS OF THE BUILDING ON EACH FLOOR, AND ADDITIONAL EXTINGUISHERS AS REQUIRED BY FIRE DEPARTMENT FIELD INSPECTOR OR BUILDING DEPARTMENT INSPECTOR. SEE DRAWINGS AND SPECS FOR MORE INFORMATION.

8 PROVIDE FIRE DAMPERS WHERE AIR DUCTS PENETRATE FIRE-RATED WALLS OR CEILINGS PER CBC SECTION 716. SEE MECHANICAL DRAWINGS AND SPECIFICATIONS FOR MORE INFORMATION.

ROOFING

1 ALL ROOFING MATERIALS SHALL COMPLY WITH ALL APPLICABLE STANDARDS LISTED IN CBC CHAPTER 15.

EXISTING CONDITIONS

1 CONTRACTOR SHALL PROVIDE AND INSTALL ALL EQUIPMENT AND RELATED ITEMS AS SHOWN IN THESE DOCUMENTS AND AS SPECIFIED. IT SHALL BE THE CONTRACTOR'S RESPONSIBILITY TO VERIFY ALL EXISTING CONDITIONS IN FIELD PRIOR TO BID AND DETERMINE THE WORK NECESSARY TO COMPLETE THE PROJECT.

2 EXISTING CONDITIONS MAY NOT BE SHOWN EXACTLY. CONTRACTOR SHALL VERIFY ALL DIMENSIONS AND CONDITIONS PRIOR TO STARTING WORK. ANY DISCREPANCIES AND/OR OMISSIONS CONTAINED IN THE CONTRACT DOCUMENTS SHALL BE BROUGHT TO THE ATTENTION OF THE ARCHITECT & CONSTRUCTION PROJECT MANAGER AT THAT TIME, OR IMMEDIATELY UPON DISCOVERY.

3 ANY ITEMS INDICATED WITH (E), EXIST., OR EXISTING SHALL BE DEEMED TO BE EXISTING. ALL OTHER ITEMS SHALL BE CONSIDERED NEW WORK AND SHALL BE PART OF THIS CONTRACT UNLESS NOTED OTHERWISE.

4 RELOCATE, RAISE, EXTEND ALL EXISTING MANHOLES, PULLBOXES, CLEAN OUTS, VAULTS, ETC. UP TO LEVEL OF NEW PAVEMENT LEVEL. RELOCATE AS REQUIRED FOR NEW WORK.

DEMOLITION

1 COMPLY WITH APPLICABLE LOCAL, STATE AND FEDERAL CODES AND REGULATIONS PERTAINING TO SAFETY OF PERSONS, PROPERTY AND ENVIRONMENTAL PROTECTION. (CFC ARTICLE 87)

2 PROVIDE AND MAINTAIN BARRICADES, LIGHTING, AND GUARDRAILS AS REQUIRED BY APPLICABLE CODES AND REGULATIONS TO PROTECT OCCUPANTS OF BUILDING AND WORKERS.

3 ERECT AND MAINTAIN DUSTPROOF PARTITIONS AS REQUIRED TO PREVENT SPREAD OF DUST, FUMES, AND SMOKE, ETC. TO OTHER PARTS OF THE BUILDING. ON COMPLETION, REMOVE PARTITIONS AND REPAIR DAMAGED SURFACES TO MATCH ADJACENT SURFACES.

4 IF DEMOLITION IS PERFORMED IN EXCESS OF THAT INDICATED OR REQUIRED, RESTORE EFFECTED AREAS AT NO COST TO THE OWNER. BRING QUESTIONABLE ITEMS TO THE ATTENTION OF THE ARCHITECT & CONSTRUCTION PROJECT MANAGER.

5 REMOVE FROM SITE DAILY AND LEGALLY DISPOSE OF REFUSE, DEBRIS, RUBBISH, AND OTHER MATERIALS RESULTING FROM DEMOLITION OPERATIONS.

6 REMOVE ABANDONED HVAC EQUIPMENT, INCLUDING DUCTWORK UNLESS NOTED OTHERWISE. TERMINATE ABANDONED LINES AT NEAREST CONCEALED LOCATION OR REMOVE IN THEIR ENTIRETY. SEE DRAWINGS.

7 REMOVE ABANDONED PLUMBING EQUIPMENT, INCLUDING PLUMBING FIXTURES AND PIPING UNLESS NOTED OTHERWISE. TERMINATE ABANDONED LINES AT NEAREST CONCEALED LOCATION OR REMOVE IN THEIR ENTIRETY. SEE ALSO DRAWINGS.

8 REMOVE ABANDONED ELECTRICAL, COMMUNICATION, DATA,. AUDIO VISUAL EQUIPMENT, DEVICES, CONDUIT, AND CABLING UNLESS NOTED OTHERWISE. TERMINATE ABANDONED LINES AT NEAREST CONCEALED LOCATION OR REMOVE IN THEIR ENTIRETY. SEE ALSO DRAWINGS.

9 ANY ITEMS NOT SHOWN ON DEMOLITION DRAWINGS SUCH AS FURNITURE, LOCKERS, SHELVING, FILE CABINETS, DESKS, CHAIRS, GENERAL OFFICE EQUIPMENT, ETC. IS THE PROPERTY OF THE OWNER AND SHALL BE STORED AND PROTECTED IN A CENTRAL LOCATION PER THE OWNERS DIRECTION UNLESS NOTED OTHERWISE.

ACCESSIBILITY NOTES

GENERAL ACCESSIBILITY NOTES

1 DURING PERIODS OF PARTIAL OR RESTRICTED USE OF A BUILDING OR FACILITY, THE ENTRANCES USED FOR PRIMARY ACCESS SHALL BE ACCESSIBLE TO AND USABLE BY PERSONS WITH DISABILITIES.

2 THE SPACE REQUIRED FOR A WHEELCHAIR TO MAKE A 180 DEGREE TURN IS A CLEAR SPACE OF 60" DIAMETER OR A T-SHAPED SPACE, SHOWN IN CBC CHAPTER 11, FIGURE 11B-12

3 IF THE CLEAR FLOOR SPACE ONLY ALLOWS A FORWARD APPROACH TO AN OBJECT, THE MAXIMUM HIGH FORWARD REACH ALLOWED SHALL BE 48". SEE CBC FIGURE 11B-5C(a). THE MINIMUM LOW FORWARD REACH IS 15". IF THE HIGH FORWARD REACH IS OVER AN OBSTRUCTION, REACH AND CLEARANCES SHALL BE AS SHOWN IN CBC FIGURE 11B-5C(b).

4 IF THE CLEAR FLOOR SPACE ALLOWS PARALLEL APPROACH BY A PERSON IN A WHEELCHAIR, THE MAXIMUM HIGH SIDE REACH ALLOWED SHALL BE 54" AND THE LOW SIDE REACH SHALL BE NO LESS THAN 9" ABOVE THE FLOOR AS SHOWN IN CBC FIGURES 11B-5D(a) & (b). IF THE SIDE REACH IS OVER AN OBSTRUCTION, THE REACH AND CLEARANCES SHALL BE AS SHOWN IN CBC FIGURE 11B-5D(c).

5 EMPLOYEE WORK AREAS SHALL BE ACCESSIBLE BY MEANS OF A 36" MINIMUM AISLE AND A 32" MINIMUM CLEAR OPENING DOOR WIDTH.

6 WHERE FIXED OR BUILT-IN SEATING, TABLES, OR COUNTERS ARE PROVIDED FOR THE PUBLIC, AND IN GENERAL EMPLOYEE AREAS, 5%, BUT NOT LESS THAN 1 MUST BE ACCESSIBLE, AS REQUIRED IN CBC SECTION 1122B.

7 MOUNTING HEIGHTS: WHERE MOUNTING HEIGHTS ARE NOT INDICATED, MOUNT INDIVIDUAL UNITS OF WORK AT MOUNTING HEIGHTS AS LISTED IN CBC TITLE 24 AND OTHER APPLICABLE CODES. REFER QUESTIONABLE MOUNTING HEIGHT CHOICES TO ARCHITECT FOR FINAL DECISION.

8 THE TOPS OF TABLES AND COUNTERS SHALL BE 28" TO 34" FROM THE FLOOR OR GROUND.

9 WHERE A SINGLE COUNTER CONTAINS MORE THAN ONE TRANSACTION STATION, SUCH AS (BUT NOT LIMITED TO) A BANK COUNTER WITH MULTIPLE TELLER WINDOWS OR A RETAIL SALES COUNTER WITH MULTIPLE CASH REGISTER STATIONS, AT LEAST 5%, BUT NEVER LESS THAN 1, OF EACH TYPE OF STATION SHALL BE LOCATED AT A SECTION OF COUNTER THAT IS AT LEAST 36" LONG AND NO MORE THAN 28" TO 34" HIGH.

10 THE INTENT OF THE DRAWINGS & SPECIFICATIONS IS TO CONSTRUCT THE FACILITY FOR ACCESSIBILITY IN ACCORDANCE WITH TITLE 24, CALIFORNIA CODE OF REGULATIONS. SHOULD ANY CONDITIONS DEVELOP NOT COVERED BY THE CONTRACT DOCUMENTS SUCH THAT THE FINISHED WORK WILL NOT COMPLY WITH SAID TITLE 24, CALIFORNIA CODE OF REGULATIONS, A CHANGE ORDER DETAILING AND SPECIFYING THE REQUIRED WORK SHALL BE SUBMITTED TO AND APPROVED BY DSA-ACS BEFORE PROCEEDING WITH THE WORK.

PATH OF TRAVEL

1 GROUND AND FLOOR SURFACES ALONG ACCESSIBLE ROUTES AND IN ACCESSIBLE ROOMS AND SPACES, INCLUDING FLOORS, WALKS, RAMPS, STAIRS, AND CURB RAMPS, SHALL BE STABLE, FIRM, AND SLIP RESISTANT.

2 IN BUILDINGS OR FACILITIES, FLOORS OF A GIVEN STORY SHALL BE A COMMON LEVEL THROUGHOUT, OR SHALL BE CONNECTED BY PEDESTRIAN RAMPS, PASSENGER ELEVATORS, OR SPECIAL ACCESS LIFTS.

3 IF CARPET OR CARPET TILE IS USED ON A GROUND OR FLOOR SURFACE, IT SHALL COMPLY WITH CBC SECTION 1124B.2 AND BE SECURELY ATTACHED; HAVE A FIRM CUSHION, PAD OR BACKING OR NO CUSHION OR PAD; AND HAVE A LEVEL LOOP TEXTURED LOOP, LEVEL CUT PILE, OR LEVEL CUT/UNCUT PILE TEXTURE. THE MAXIMUM PILE HEIGHT SHALL BE 1/2". EXPOSED EDGES OF CARPET SHALL BE FASTENED TO FLOOR SURFACES AND HAVE TRIM ALONG THE ENTIRE LENGTH OF THE EXPOSED EDGE.

4 OBJECTS PROJECTING FROM WALLS WITH THEIR LEADING EDGES BETWEEN 27" AND 80" ABOVE THE FINISHED FLOOR SHALL PROTRUDE NO MORE THAN 4" INTO THE ACCESSIBLE PATH OF TRAVEL (WALKS, HALLS, CORRIDORS, PASSAGEWAYS OR AISLES).

5 FREE-STANDING OBJECTS MOUNTED ON POSTS OR PYLONS MAY OVERHANG 12" MAXIMUM FROM INTO THE ACCESSIBLE PATH OF TRAVEL.

6 PROTRUDING OBJECTS SHALL NOT REDUCE THE REQUIRED CLEAR WIDTH OF AN ACCESSIBLE ROUTE OR MANEUVERING SPACE.

7 WALKS, HALLS, CORRIDORS, PASSAGEWAYS, AISLES OR OTHER CIRCULATION SPACES SHALL HAVE 80" MINIMUM CLEAR HEAD ROOM.

8 ANY OBSTRUCTION THAT OVERHANGS A PEDESTRIAN WAY SHALL BE A MINIMUM OF 80" ABOVE THE WALKING SURFACE.

9 IF A WALK CROSSES OR ADJOINS A VEHICULAR WAY, AND THE WALKING SURFACES ARE NOT SEPARATED BY CURBS, RAILINGS OR OTHER ELEMENTS BETWEEN THE PEDESTRIAN AREAS AND VEHICULAR AREAS, THE BOUNDARY BETWEEN THE AREAS SHALL BE DEFINED BY A CONTINUOUS DETECTABLE WARNING WHICH IS 36" WIDE, COMPLYING WITH CBC SECTION 1133B.8.5.

ACCESS WALKS

1 SITE DEVELOPMENT AND GRADING SHALL BE DESIGNED TO PROVIDE ACCESS TO ALL ENTRANCES AND EXTERIOR GROUND FLOOR EXITS, AND ACCESS TO NORMAL PATHS OF TRAVEL.

2 WHEN MORE THAN ONE BUILDING OR FACILITY IS LOCATED ON A SITE, ACCESSIBLE ROUTES OF TRAVEL SHALL BE PROVIDED BETWEEN BUILDINGS AND ACCESSIBLE SITE FACILITIES.

3 THE ACCESSIBLE ROUTE OF TRAVEL SHALL BE THE MOST PRACTICAL DIRECT ROUTE BETWEEN ACCESSIBLE BUILDING ENTRANCES, ACCESSIBLE SITE FACILITIES, AND THE ACCESSIBLE ENTRANCE TO THE SITE.

4 AT LEAST ONE ACCESSIBLE ROUTE WITHIN THE BOUNDARY OF THE SITE SHALL BE PROVIDED FROM PUBLIC TRANSPORTATION STOPS, ACCESSIBLE PARKING AND ACCESSIBLE PASSENGER LOADING ZONES, AND PUBLIC STREETS OR SIDEWALKS, TO THE ACCESSIBLE BUILDING ENTRANCES THEY SERVE. THE ACCESSIBLE ROUTE SHALL, TO THE MAXIMUM EXTENT FEASIBLE, COINCIDE WITH THE ROUTE FOR THE GENERAL PUBLIC.

5 WALKS AND SIDEWALKS IN AN ACCESSIBLE ROUTE SHALL HAVE A CONTINUOUS COMMON SURFACE, NOT INTERRUPTED BY STEPS OR BY ABRUPT CHANGES IN LEVEL EXCEEDING 1/2", AND SHALL BE A MINIMUM OF 48" IN WIDTH.

6 ABRUPT CHANGES IN LEVEL, EXCEPT BETWEEN A WALK OR SIDEWALK AND DRIVEWAY, OR WHEN A GUARDRAIL OR HANDRAIL IS PROVIDED, EXCEEDING 4 INCHES IN A VERTICAL DIMENSION SHALL BE IDENTIFIED BY CURBS PROJECTING AT LEAST 6 INCHES IN HEIGHT ABOVE WALK OR SIDEWALK SURFACE TO WARN THE BLIND OF A POTENTIAL DROP-OFF.

7 WHEN ABRUPT CHANGES IN LEVEL ALONG AN ACCESSIBLE ROUTE NOT EXCEEDING 1/2" OCCUR, THEY SHALL BE BEVELED WITH A SLOPE NO GREATER THAN 1:2, EXCEPT THAT LEVEL CHANGES NOT EXCEEDING 1/4" SHALL BE VERTICAL.

8 ABRUPT CHANGES IN LEVEL ALONG ANY ACCESSIBLE ROUTE EXCEEDING 1/2" SHALL COMPLY WITH THE REQUIREMENTS FOR CURB RAMPS.

9 WHEN THE SLOPE IN THE DIRECTION OF TRAVEL OF ANY WALK EXCEEDS 1 VERTICAL TO 20 HORIZONTAL IT SHALL COMPLY WITH THE PROVISION IN CBC SECTION 1133B.5 AS A PEDESTRIAN RAMP.

10 WALK AND SIDEWALK SURFACE CROSS SLOPES SHALL NOT EXCEED 1/4" PER FOOT.

11 WALKS SHALL BE PROVIDED WITH A LEVEL AREA NOT LESS THAN 60" AT A DOOR OR GATE THAT SWINGS TOWARD WALK, & NOT LESS THAN 48" WIDE BY 44" DEEP AT A DOOR GATE THAT SWINGS AWAY FROM WALK.

12 WALKS SHALL EXTEND A MINIMUM OF 24" TO THE SIDE OF THE STRIKE EDGE OF A DOOR OR A GATE THAT SWINGS TOWARD THE WALK.

13 ALL WALKS WITH CONTINUOUS GRADIENTS SHALL HAVE LEVEL AREAS AT LEAST 5' IN LENGTH AT INTERVALS OF AT LEAST EVERY 400'.

14 WALK SURFACES WITH A SLOPE OF LESS THAN 6% GRADIENT SHALL BE AT LEAST AS SLIP-RESISTANT AS THAT DESCRIBED AS A MEDIUM SALTED FINISH.

15 WALK SURFACES WITH A SLOPE OF 6% OR GREATER GRADIENT SHALL BE SLIP RESISTANT.

CURB RAMPS

1 CURB RAMPS SHALL BE A MINIMUM OF 4' IN WIDTH AND SHALL LIE, GENERALLY, IN A SINGLE SLOPED PLANE, WITH A MINIMUM OF SURFACE WARPING AND CROSS SLOPE.

2 THE SLOPE OF CURB RAMPS SHALL NOT EXCEED 1 VERTICAL TO 12 HORIZONTAL.

3 MAXIMUM SLOPES OF ADJOINING GUTTERS, ROAD SURFACE IMMEDIATELY ADJACENT TO THE CURB RAMP, OR ACCESSIBLE ROUTE, SHALL NOT EXCEED 1:20 WITHIN 4' OF THE TOP AND BOTTOM OF THE CURB RAMP. THE SLOPE OF FANNED OR FLARED SIDES OF CURB RAMPS SHALL NOT EXCEED 1 VERTICAL TO 10 HORIZONTAL.

4 A LEVEL LANDING 4' DEEP SHALL BE PROVIDED AT THE UPPER END OF EACH CURB RAMP OVER ITS FULL WIDTH TO PERMIT SAFE EGRESS FROM THE RAMP SURFACE, IF LESS THAN 4' DEEP THE SLOPE OF THE FANNED OR FLARED SIDES OF THE CURB RAMP SHALL NOT EXCEED 1 VERTICAL TO 12 HORIZONTAL.

5 TRANSITIONS FROM RAMPS TO WALKS, GUTTERS, OR STREET SHALL BE FLUSH AND FREE OF ABRUPT CHANGES.

6 IF DIAGONAL (CORNER TYPE) CURB RAMPS HAVE RETURNED CURBS OR OTHER WELL-DEFINED EDGES, SUCH EDGES SHALL BE PARALLEL TO THE DIRECTION OF PEDESTRIAN FLOW. THE BOTTOM OF THE DIAGONAL CURB RAMP SHALL HAVE 48" MINIMUM CLEAR INCHES. IF THE BOTTOM OF DIAGONAL CURB RAMPS ARE PROVIDED AT MARKED CROSSINGS, THE 48" CLEAR SPACE SHALL BE WITHIN THE MARKINGS. IF DIAGONAL CURB RAMPS HAVE FLARED SIDES, THEY SHALL ALSO HAVE AT LEAST A 24" LONG SEGMENT A STRAIGHT CURB LOCATED ON EACH SIDE OF THE CURB RAMP AND WITHIN THE MARKED CROSSING.

7 THE SURFACE OF EACH CURB RAMP AND ITS FLARED SIDES SHALL BE STABLE, FIRM, AND SLIP-RESISTANT AND SHALL BE OF CONTRASTING FINISH FROM THAT OF THE ADJACENT SIDEWALK.

8 ALL CURB RAMPS SHALL HAVE A GROOVED BORDER 12" WIDE AT THE LEVEL SURFACE OF THE SIDEWALK ALONG THE TOP AND EACH SIDE APPROXIMATELY 3/4" ON CENTER. ALL CURB RAMPS CONSTRUCTED BETWEEN THE FACE OF CURB & STREET SHALL HAVE A GROOVED BORDER AT THE LEVEL SURFACE OF THE SIDEWALK.

9 A CURB RAMP SHALL HAVE A DETECTABLE WARNING THAT EXTENDS THE FULL WIDTH AND DEPTH OF THE CURB RAMP INSIDE THE GROOVED BORDER. DETECTABLE WARNINGS SHALL CONSIST OF RAISED TRUNCATED DOMES WITH A DIAMETER OF NOMINAL 0.9" AT THE BASE TAPERING TO 0.45" AT THE TOP, A HEIGHT OF NOMINAL 0.2", AND A CENTER-TO-CENTER IN-LINE SPACING OF NOMINAL 1.67", IN COMPLIANCE WITH CBC FIGURE 11B-23A "NOMINAL", AS USED HERE, SHALL BE IN ACCORDANCE WITH SECTION 12-11A AND B-102, STATE REFERENCED STANDARD CODE. THE DETECTABLE WARNING SHALL CONTRAST VISUALLY WITH ADJOINING SURFACES, EITHER LIGHT- ON-DARK OR DARK-ON-LIGHT. THE MATERIAL USED TO PROVIDE CONTRAST SHALL BE AN INTEGRAL PART OF THE WALKING SURFACE. THE DOMES MAY BE CONSTRUCTED IN A VARIETY OF METHODS, INCLUDING CAST-IN-PLACE OR STAMPED, OR MAY BE PART OF A PREFABRICATED SURFACE TREATMENT.

10 CURB RAMPS SHALL BE LOCATED OR PROTECTED TO PREVENT THEIR OBSTRUCTION BY PARKED CARS.

ACCESSIBILITY NOTES

ACCESS RAMP

1 THE MAXIMUM SLOPE OF A RAMP THAT SERVES ANY EXITWAY, PROVIDES ACCESS FOR PERSONS WITH DISABILITIES, OR IS IN THE PATH OF TRAVEL SHALL BE 1 UNIT RISE IN 12 UNITS OF HORIZONTAL RUN.

2 THE CROSS SLOPE OF RAMP SURFACES SHALL BE NO GREATER THAN 1:50 (2%).

3 THE WIDTH OF RAMPS SHALL BE A MINIMUM CLEAR WIDTH OF 48" BUT NOT LESS THAN AS REQUIRED FOR STAIRWAYS AND EXITS.

4 PEDESTRIAN RAMPS SERVING PRIMARY ENTRANCES TO BUILDINGS HAVING AN OCCUPANT LOAD OF 300 OR MORE SHALL HAVE A MINIMUM CLEAR WIDTH OF 60".

5 RAMPS SERVING GROUP R OCCUPANCIES MAY BE 36" CLEAR WIDTH WHEN OCCUPANT LOAD IS 50 OR LESS.

6 LANDINGS SHALL BE PROVIDED AT THE TOP AND BOTTOM OF EACH RAMP.

7 INTERMEDIATE LANDINGS SHALL BE PROVIDED AT INTERVALS NOT EXCEEDING 30" OF VERTICAL RISE AND AT EACH CHANGE OF DIRECTION.

8 TOP LANDINGS SHALL NOT BE LESS THAN 60" WIDE AND SHALL HAVE A LENGTH OF NOT LESS THAN 60" IN THE DIRECTION OF RAMP RUN. LANDINGS AT THE BOTTOM OF RAMPS SHALL HAVE A LENGTH OF NOT LESS THAN 72"

STAIRS

1 STAIRWAYS SHALL HAVE HANDRAILS ON EACH SIDE MOUNTED 34" TO 38" ABOVE THE NOSING OF THE TREADS.

2 HANDRAILS SHALL EXTEND A MINIMUM OF 12" BEYOND THE TOP NOSING AND 12" PLUS THE TREAD WIDTH BEYOND THE BOTTOM NOSING.

3 END RAILS RETURN TO THE WALL OR TERMINATE IN NEWEL POSTS.

4 IN EXISTING FACILITIES, WHERE THE EXTENSION OF THE HANDRAIL IN THE DIRECTION OF THE STAIR RUN WOULD CREATE A HAZARD, THE TERMINATION OF THE EXTENSION SHALL BE MADE EITHER ROUNDED OR RETURNED SMOOTHLY TO THE FLOOR, WALL, OR POST. WHERE THE STAIRS ARE CONTINUOUS FROM LANDING TO LANDING, THE INNER RAIL SHALL BE CONTINUOUS AND NEED NOT EXTEND OUT INTO THE LANDING.

5 THE HANDGRIP PORTION OF HANDRAILS SHALL NOT BE LESS THAN 1-1/4" NOR MORE THAN 1-1/2" IN CROSS SECTIONAL DIMENSION. THE HANDGRIP PORTION OF THE HANDRAILS SHALL HAVE A SMOOTH SURFACE WITH NO SHARP CORNERS. ALL WALLS OR OTHER SURFACES ADJACENT TO THE HANDRAILS SHALL BE FREE OF SHARP OR ABRASIVE ELEMENTS. EDGES SHALL HAVE A MINIMUM RADIUS OF 1/8". HANDRAILS SHALL HAVE A SPACE OF 1-1/2" BETWEEN THE WALL AND HANDRAIL.

6 PROVIDE A STRIP OF CLEARLY CONTRASTING COLOR AT LEAST 2" AND NO MORE THAN 4" WIDE AND PLACED PARALLEL TO AND NOT MORE THAN 1" FROM THE NOSE OF THE STEP OR LANDING TO ALERT THE VISUALLY IMPAIRED. THE STRIP SHALL BE OF A MATERIAL THAT IS AT LEAST AS SLIP RESISTANT AS THE TREADS OF THE STAIR. WHERE STAIRWAYS OCCUR AT INTERIOR OF A BUILDING, PROVIDE STRIPS AT THE UPPER APPROACH AND LOWEST TREAD. WHERE STAIRWAYS OCCUR AT EXTERIOR OF A BUILDING, PROVIDE STRIPS AT THE UPPER APPROACH AND ALL TREADS. A PAINTED STRIP SHALL BE ACCEPTABLE AT EXTERIOR STAIRWAYS.

7 ALL TREAD SURFACES SHALL BE SLIP-RESISTANT. TREADS SHALL HAVE SMOOTH EXPOSED EDGES. STAIR NOSINGS SHALL NOT PROJECT MORE THAN 1 1/2" PAST THE FACE OF THE LOWER RISER. THERE SHALL BE NO OPEN RISERS.

ELEVATOR

1 PASSENGER ELEVATORS ARE LOCATED NEAR MAJOR PATH OF TRAVEL AND ARE ACCESSIBLE AND USABLE AT ALL TIMES.

2 MINIMUM CLEAR WIDTH FOR ELEVATOR DOORS SHALL BE 36"

3 ELEVATORS: THE CAR INSIDE SHALL ALLOW FOR THE TURNING OF A WHEELCHAIR. THE MINIMUM CLEAR DISTANCE BETWEEN WALLS OR BETWEEN WALL AND DOOR, EXCLUDING RETURN PANELS, SHALL NOT BE LESS THAN 80" BY 54" FOR CENTER-OPENING DOORS, AND 68" BY 54" FOR SIDE-SLIDE OPENING DOORS. MINIMUM DISTANCE FROM WALL TO RETURN PANEL SHALL BE NOT LESS THAN 51".
MINIMUM CLEAR WIDTH FOR ELEVATOR DOORS SHALL BE 36"

4 HANDRAILS ARE PROVIDED ON AT LEAST ONE WALL OF THE CAR. HANDRAILS ARE SMOOTH, THE INSIDE SURFACE IS 1- 1/2" MINIMUM CLEAR FROM THE WALLS AT 32" ABOVE THE FLOOR OF THE CAR.

5 ILLUMINATION AT THE CAR CONTROLS, THRESHOLD AND LANDING IS AT LEAST 5 FOOT-CANDLES.

6 ELEVATORS SHALL BE EQUIPPED WITH A SELF-LEVELER. THE SELF- LEVELING IS ENTIRELY AUTOMATIC AND INDEPENDENT OF THE OPERATING DEVICE AND CORRECTS CAR FLOOR UNDER- AND OVER TRAVEL TO WITHIN 1/2 INCH PLUS OR MINUS OF FLOOR LANDINGS, MAXIMUM. THE CAR IS MAINTAINED APPROXIMATELY LEVEL WITH THE LANDING, REGARDLESS OF LOAD. THE CLEARANCE BETWEEN THE CAR PLATFORM SILL AND THE EDGE OF THE HOISTWAY LANDING IS LESS THAN 1-1/4".

BID ALTERNATES

DESCRIPTION

#1 REMOVE VERTICAL SHADING FINS FROM NORTH & EAST ELEVATIONS. CHANGE PAINT ON EXTERIOR X-BRACING FROM P-1 BULLSHOT (RED) TO P-3 GALWAY (BLUE)

#2 REMOVE VERTICAL SHADING FINS FROM WEST & SOUTH ELEVATIONS. CHANGE PAINT ON EXTERIOR X-BRACING FROM P-1 BULLSHOT (RED) TO P-3 GALWAY (BLUE)

#3 REMOVE HORIZONTAL METAL SHADING ELEMENTS AT COURTYARD ELEVATION

#4 CHANGE PLASTIC LAMINATE FINISH ON CASEWORK TO WOOD FINISH

#5 REMOVE LED WALL-WASHER LIGHTS AT PLANETARIUM LOBBY WALL

#6 ADD SLOPED FLOOR AT PLANETARIUM. ADD FLOOR RAMPS AT PLANETARIUM VESTIBULES. ADD PLANETARIUM SEATING. CHANGE PLANETARIUM DOORS & FRAMES TO STANDARD HEIGHT.

#7 CHANGE RUBBER FLOORING AT HALLWAYS & STAIRS TO THIN-SET TERRAZZO FLOORING WITH PRECAST BASE AND PRECAST TERRAZZO TREADS & RISERS

#8 REPLACE CARD READERS AT DOORS WITH KEY & CYLINDER LOCKS

#9 ADD 2 KITCHENS (INCLUDING CASEWORK, EQUIPMENT, & PLUMBING FIXTURES) TO NUTRITION/FOOD LAB (4 TOTAL)

#10 CHANGE BLACK #06 EPOXYN LABORATORY COUNTERTOPS TO BLUE #09 EPOXYN

#11 FLOOR FINISHES: CHANGE COMMERCIAL HOMOGENOUS TILE (CHT) TO RUBBER TILE (RF) IN LABORATORIES AND AND LAB ACCESSORY ROOMS.

#12 WALL FINISHES IN CORRIDORS: CHANGE ACCENT PAINT COLOR TO FABRIC WALL COVERING FWC-1.
WALL FINISHES IN PLANETARIUM HALL: CHANGE FIELD PAINT COLOR TO FABRIC WALL COVERING FWC-3

DEFERRED APPROVAL ITEMS

2

DESCRIPTION

1. AUTOMATIC FIRE SPRINKLER SYSTEM
2. GFRC (GLASS FIBER REINFORCED CONCRETE) EXTERIOR WALL PANEL SYSTEM
3. ELEVATOR GUIDE RAILS & SUPPORT BRACKETS
4. CURTAIN WALLS THAT SPAN GREATER THAN 10 FEET, INCLUDING VERTICAL & HORIZONTAL SHADING FINS.
5. PLANETARIUM CEILING DOME

NOTE:

ALL DEFERRED SUBMITTALS (DS) MUST BE RECEIVED AT DSA NO LATER THAN 60 DAYS AFTER LETTING OF CONTRACT. THERE MAY BE A STOP WORK ORDER ISSUED IF INSTALLATION OF AUTOMATIC FIRE SPRINKLER SYSTEM STARTS BEFORE OBTAINING DSA APPROVAL.

INSTALLATION OF DEFERRED APPROVAL ITEMS SHALL NOT BE STARTED UNTIL DETAILED PLANS & SPECIFICATIONS ARE APPROVED BY THE DIVISION OF THE STATE ARCHITECT (DSA). ALLOW 60 DAYS FOR REVIEW AND APPROVAL.

tBP
architecture
planning
interiors
management

LICENSED ARCHITECT
JIM C. PAN, AIA
NO. C25974
REN. 4-30-11
STATE OF CALIFORNIA

tBP/Architecture
5455 Wilshire Boulevard, Suite 1200
Los Angeles, CA 90036-4242
ph: 323. 556. 3788 fx: 323. 556. 3799
architect

consultant

IDENTIFICATION STAMP
DIV. OF THE STATE ARCHITECT
OFFICE OF REGULATION SERVICES
File No. 19-C11
Appl No. 03-112201
AC ____ FLS ____ SS ____
DATE ____

DSA Los Angeles Basin Regional Office
700 North Alameda Street, Suite 5-500
Los Angeles, California 90012
ph: 213/897-3995 fx: 213/897-3159/0726
agency

ANTELOPE VALLEY COLLEGE
HEALTH & SCIENCE BUILDING
ANTELOPE VALLEY COMMUNITY COLLEGE DISTRICT
3041 WEST AVENUE K
LANCASTER, CA 93536-5426
owner

tBP project number : 20641.00
file name: 00-T4-GenNotes.dwg
drawn by: - checked by: -
date: JULY 30, 2009 - 100% CD

Rev:	date:	description:
2	2/26/10	ADDENDUM #2

THIS DRAWING AND THE DESIGNS, DEPICTIONS, IDEAS AND OTHER INFORMATION CONTAINED HEREIN CONSTITUTE UNPUBLISHED WORK OF tBP/ARCHITECTURE AND SHALL REMAIN THE PROPERTY OF tBP/ARCHITECTURE IN PERPETUITY. NO PART THEREOF SHALL BE REPRODUCED, DISCLOSED, DISTRIBUTED, SOLD, PUBLISHED OR OTHERWISE USED IN ANY WAY WITHOUT THE ADVANCED EXPRESS WRITTEN CONSENT OF tBP/ARCHITECTURE.

drawing title:
GENERAL NOTES

drawing no.:
T-4
drawing of

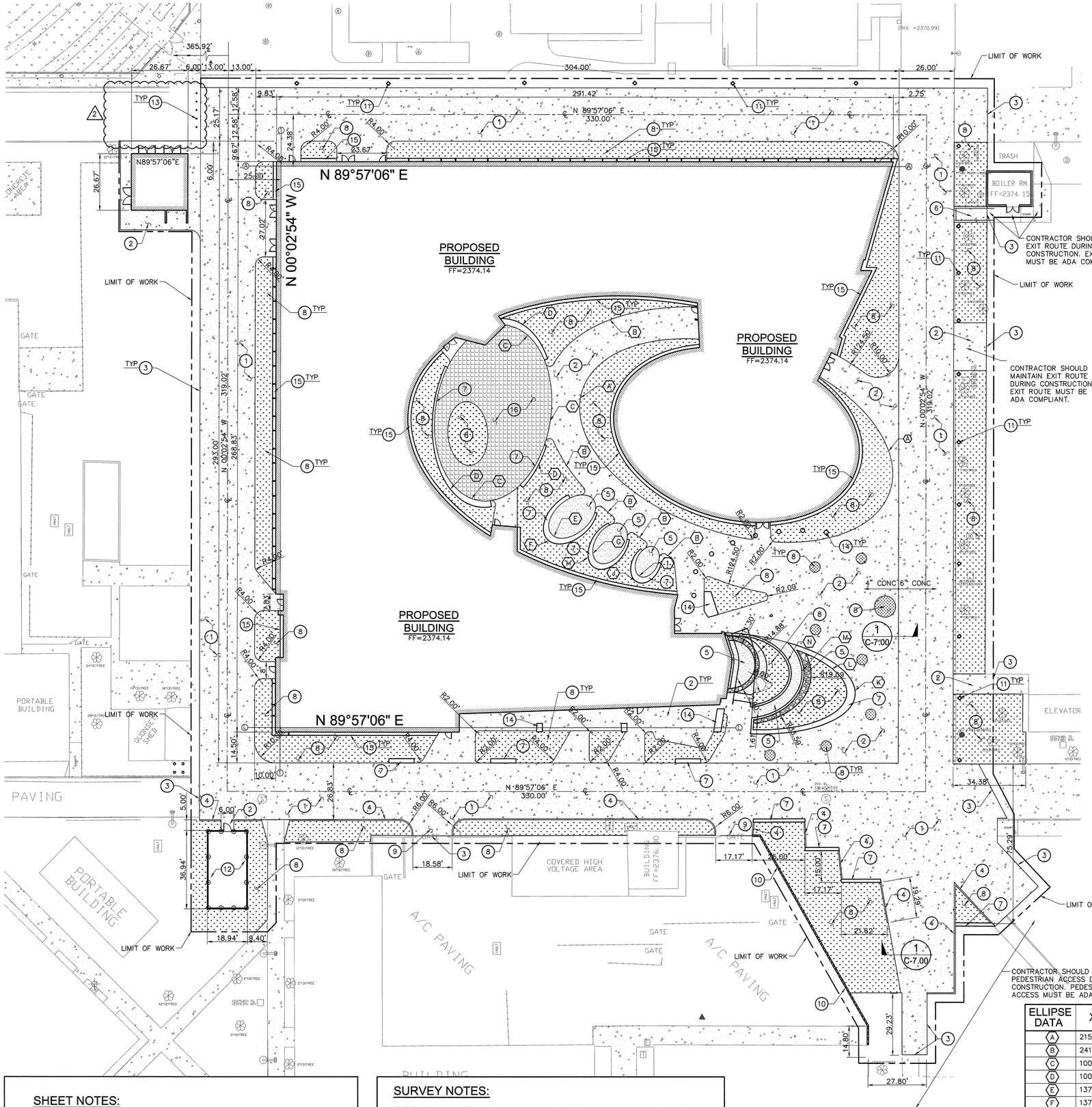

CONSTRUCTION NOTES:

1. 6" CONCRETE PAVEMENT PER DETAIL 1 ON SHEET C-7.00.
2. 4" CONRETE PAVEMENT PER DETAIL 1 ON SHEET C-7.00.
3. JOIN EXISTING PAVEMENT. PROVIDE EXPANSION JOINT, REFER TO ARCHITECTURAL DRAWINGS.
4. CONCRETE CURB PER DETAIL 2 ON SHEET C-7.00.
5. PAVING PER LANDSCAPE DRAWINGS.
6. RAMP PER DETAIL 6 ON SHEET C-7.10. 12" HANDRAIL EXTENSION AT TOP AND BOTTOM OF RAMP, BOTH SIDES, TYP.
7. SEAT WALL PER ARCHITECTURAL DRAWINGS.
8. PLANTER PER LANDSCAPE DRAWINGS.
9. DRIVEWAY PER APWA STANDARD PLAN 110-1
10. WALL PER DETAIL 1 ON SHEET S-5.10.
11. EXISTING LIGHT POST TO REMAIN.
12. GREENHOUSE PER ARCHITECTURAL DRAWINGS.
13. REMOVABLE BOLLARDS PER ARCHITECTURAL DRAWINGS.
14. STRUCTURE PER ARCHITECTURAL / STRUCTURAL DRAWINGS.
15. MOW STRIP PER LANDSCAPE DRAWINGS.
16. CONCRETE PAVERS PER ARCHITECTURAL DRAWINGS.

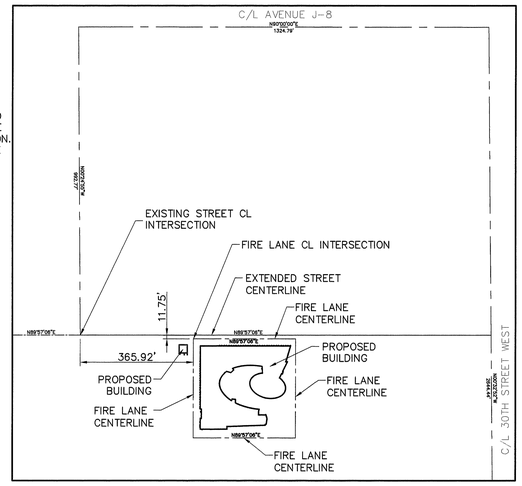

FIRE LANE KEY PLAN

100 50 0 100 200

SCALE: 1" = 200'

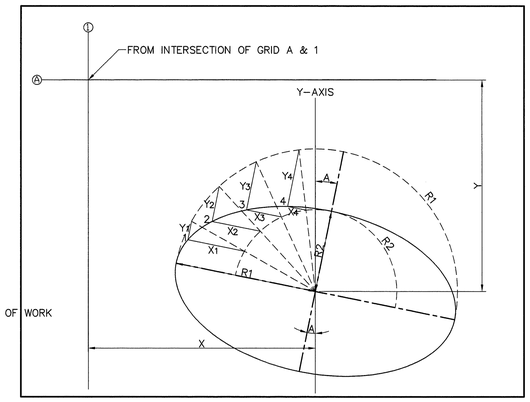

AUXILIARY CIRCLES METHOD

ELLIPSE DATA	X	Y	A	R1	R2	1		2		3		4	
						X1	Y1	X2	Y2	X3	Y3	X4	Y4
A	215.27'	129.16'	18°00'00"	76.49'	43.87'	31.02'	10.08'	26.39'	19.17'	19.17'	26.39'	10.08'	31.02'
B	241.05'	139.60'	20°00'00"	121.67'	64.50'	54.37'	17.67'	46.25'	33.60'	33.60'	46.25'	17.67'	54.37'
C	100.40'	116.23'	81°00'00"	41.81'	27.28'	13.82'	4.49'	11.76'	8.54'	8.54'	11.76'	4.49'	13.82'
D	100.40'	116.23'	81°00'00"	44.81'	28.27'	15.73'	5.11'	13.38'	9.72'	9.72'	13.38'	5.11'	15.73'
E	137.78'	165.05'	39°51'38"	12.81'	7.92'	4.65'	1.51'	3.96'	2.87'	2.87'	3.96'	1.51'	4.65'
F	137.01'	165.69'	42°04'15"	14.87'	9.70'	4.92'	1.60'	4.19'	3.04'	3.04'	4.19'	1.60'	4.92'
G	155.69'	177.71'	55°52'34"	10.59'	6.81'	3.60'	1.17'	3.06'	2.22'	2.22'	3.06'	1.17'	3.60'
H	155.11'	178.57'	55°52'34"	12.55'	8.24'	4.10'	1.33'	3.49'	2.54'	2.54'	3.49'	1.33'	4.10'
I	173.28'	186.34'	63°22'57"	7.70'	5.08'	2.49'	0.81'	2.12'	1.54'	1.54'	2.12'	0.81'	2.49'
J	172.75'	187.40'	63°22'57"	9.51'	6.63'	2.74'	0.89'	2.33'	1.69'	1.69'	2.33'	0.89'	2.74'
K	216.21'	243.60'	5°47'13"	55.61'	23.35'	30.68'	9.97'	26.10'	18.96'	18.96'	26.10'	9.97'	30.68'
L	216.21'	243.60'	5°47'13"	51.61'	21.35'	28.78'	9.35'	24.49'	17.79'	17.79'	24.49'	9.35'	28.78'
M	216.82'	237.63'	5°47'00"	29.69'	22.38'	6.96'	2.26'	5.92'	4.30'	4.30'	5.92'	2.26'	6.96'
N	216.82'	237.63'	5°47'13"'	24.66'	17.35'	6.96'	2.26'	5.92'	4.30'	4.30'	5.92'	2.26'	6.96'

SHEET NOTES:

1. FOR GENERAL NOTES, LEGEND AND ABBREVIATIONS, SEE SHEET C-1.00 AND C-1.10.
2. SEE ARCHITECTURAL / LANDSCAPE DRAWINGS FOR OTHER SITE DIMENSIONS NOT SHOWN ON THIS DRAWING.
3. FOR CONCRETE STRUCTURE OR FEATURE DETAILS, SEE ARCHITECTURAL DRAWINGS. CONCRETE STRUCTURE OR FEATURE INCLUDES ARCHITECTURAL CONCRETE PAVEMENT, RAMP WITH GUARDRAILS, ACCESSIBLE RAMP, PLANTER AREA, TRASH ENCLOSURE, AND TRANSFORMER ENCLOSURE AND CONCRETE PAD, GAS PLUMBING AND ROOF DRAINS. FOR LANDSCAPING AND IRRIGATION FEATURES, SEE LANDSCAPING DRAWINGS.

SURVEY NOTES:

THE EXISTING CONDITIONS FOR THE CIVIL ENGINEERING DESIGN PLANS ARE PREPARED BY QUALITY SURVEYING CONSULTING SERVICES, 42326 N 10TH ST WEST, STE. #C, LANCASTER, CALIF. 93534, TEL# (661) 723-2892,

BENCHMARKS:

EL-2361.675 L 4785 LANC QUAD "98"
RDBM TAG IN E CB 600MM N/O BCR @ NE COR 30TH ST W & AVE J-8 21M N & 13M E/O C/L INTERSECTION.

BENCHMARKS:

THE BEARINGS HEREON ARE BASED ON THE NORTH LINE OF THE SOUTHEAST QUARTER OF SECTION 19, TOWNSHIP 7 NORTH, RANGE 12 WEST, SAN BERNARDINO MERIDIAN. SAID LINE HAVING AN ASSUMED BEARING OF N89°59'42"W.

SITE CONTROL PLAN

10 5 0 10 20

SCALE: 1" = 20'

architecture planning interiors management

tBP /Architecture
5455 Wilshire Boulevard, Suite 1200
Los Angeles, CA 90036-4242
ph: 323. 556. 3788 fx: 323. 556. 3799

architect

MCA ENGINEERS, INC.
CIVIL • STRUCTURAL
3901 Medford Street Los Angeles, CA 90063
Tel: 323.729.6068 Fax: 323.729.6043
VIRGILIO C. ADAMAN, RCE36079
3/1/2010 DATE
Exp. 6/30/01 CIVIL
STATE OF CALIFORNIA

consultan

IDENTIFICATION STAMP
DIV. OF THE STATE ARCHITECT
OFFICE OF REGULATION SERVICES
File No. 19-C11
Appl No. 03-112201
AC ____ FLS ____ SS ____
DATE ____

DSA Los Angeles Basin Regional Office
700 North Alameda Street, Suite 5-500
Los Angeles, California 90012
ph: 213/897-3995 fx: 213/897-3159/0726

agency

ANTELOPE VALLEY COLLEGE HEALTH & SCIENCE BUILDING

Antelope Valley Community College District
3041 West Avenue K
Lancaster, CA. 93536-5426

owner

tBP project number : 20641.00

file name:

drawn by: AL checked by:VCA

date: JULY 30, 2009 - 100% CD

Rev:	date:	description:
1	11/16/09	ADDENDUM #1
2	02/26/10	ADDENDUM #2

THIS DRAWING AND THE DESIGNS, DEPICTIONS, IDEAS AND OTHER INFORMATION CONTAINED HEREON CONSTITUTE UNPUBLISHED WORK OF tBP/ARCHITECTURE AND SHALL REMAIN THE PROPERTY OF tBP/ARCHITECTURE IN PERPETUITY. NO PART THEREOF SHALL BE REPRODUCED, DISCLOSED, DISTRIBUTED, SOLD, PUBLISHED OR OTHERWISE USED IN ANY WAY WITHOUT THE ADVANCED EXPRESS WRITTEN CONSENT OF tBP/ARCHITECTURE.

drawing title:

SITE CONTROL PLAN

drawing no.:

C-2.00

drawing 3 of 15

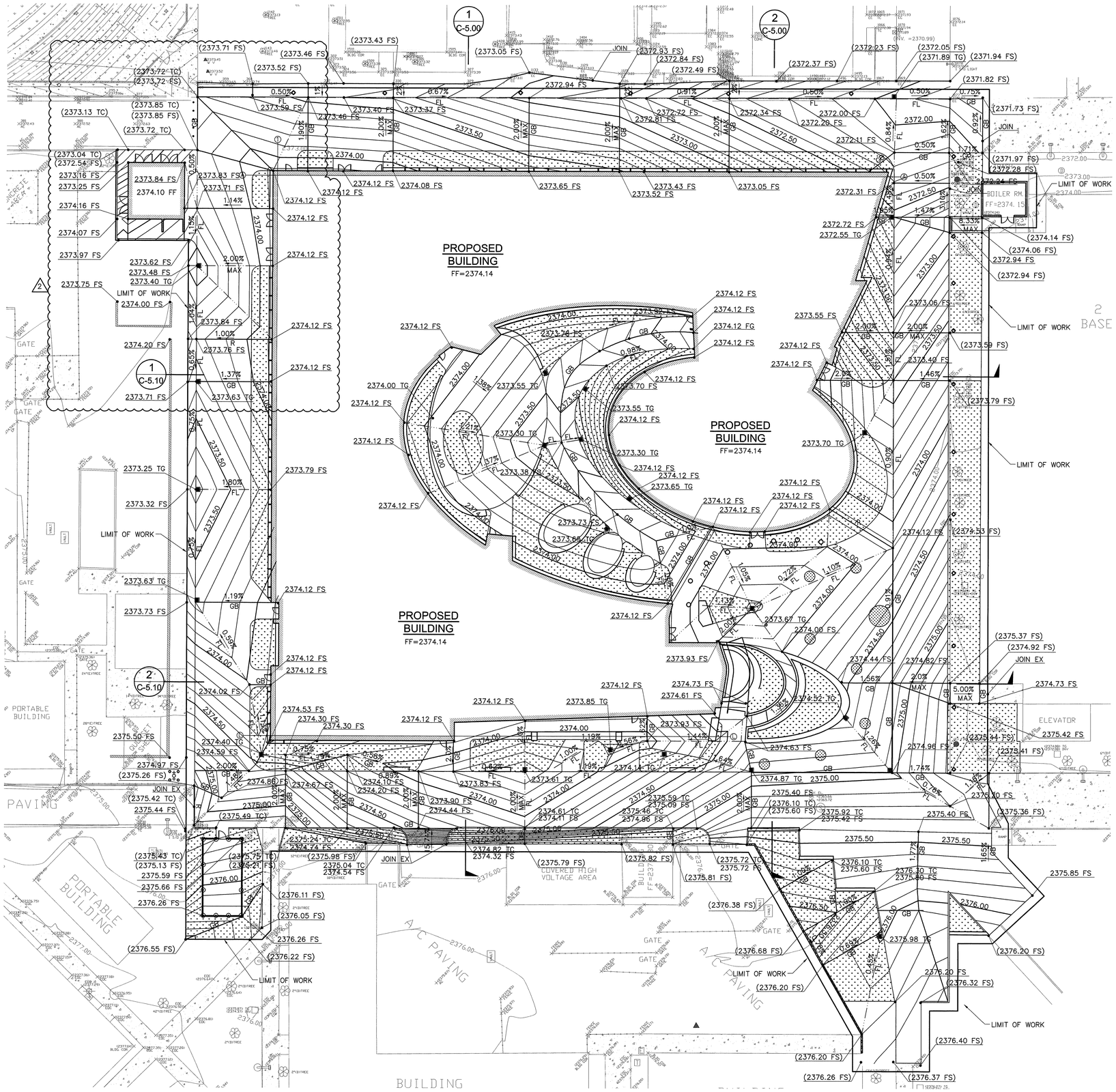

FINAL GRADING NOTES:

1. ALL GRADING SHALL BE PERFORMED IN ACCORDANCE WITH THE REQUIREMENTS OF THE JURISDICTIONAL AGENCIES AND THE RECOMMENDATIONS IN THE GEOTECHNICAL REPORT.
2. THE CONTRACTOR SHALL OBTAIN A VALID GRADING PERMIT FROM THE JURISDICTIONAL AGENCIES PRIOR TO STARTING WORK. PROVIDE A HAUL ROUTE AS REQUIRED BY THE JURISDICTIONAL AGENCIES.
3. NO GRADING WORK SHALL BE PERFORMED AT ANY TIME WITHOUT AN EROSION CONTROL SYSTEM APPROVED BY CITY ENGINEER. ANY GRADING WORK SHALL BE PERFORMED WITH AN EROSION CONTROL SYSTEM APPROVED BY THE CITY ENGINEER AND THE JURISDICTIONAL AGENCIES.
4. CONTRACTOR SHALL PROVIDE A STORM WATER POLLUTION PREVENTION PLAN (SWPPP) AND EROSION AND SEDIMENTATION CONTROL FOR REVIEW AND APPROVAL OF THE JURISDICTIONAL AGENCIES AND ENGINEER. USE RECOMMENDATIONS BY THE BEST MANAGEMENT PRACTICES (BMP'S) TO IMPLEMENT CONTROL. USE MINIMUM OF TWO STACKED SANDBAGS AROUND THE PERIPHERY OF THE WORK LIMITS TO AUGMENT THE SYSTEM REQUIRED BY THE AGENCIES HAVING JURISDICTION OVER THE PROJECT.
5. CONSTRUCT DESIGN GRADES SHOWN ON PLAN. CONSTRUCT STRAIGHT GRADES BETWEEN INDICATED ELEVATIONS UNLESS INTERRUPTED BY A GRADE CHANGE LINE.
6. CONTRACTOR SHALL RECOMPACT THE TOP 12" OF THE SUB GRADE TO 95% MAXIMUM RELATIVE DENSITY.
7. THE CONTRACTOR SHALL NOT BEGIN THE PAVING OPERATION UNTIL THE SUB GRADE HAS BEEN APPROVED BY THE CITY INSPECTOR AND SOIL'S ENGINEER.
8. THE CONTRACTOR IS ADVISED THAT THE APPROVAL OF THIS PLAN DOES NOT WAIVE THE REQUIREMENTS FOR EXCAVATIONS CONTAINED IN THE STATE CONSTRUCTION SAFETY ORDERS ENFORCED BY THE STATE DIVISION OF INDUSTRIAL SAFETY.
9. NO FILL TO BE PLACED, UNTIL THE GEOTECHNICAL ENGINEER OR CITY INSPECTOR HAS INSPECTED AND APPROVED THE BOTTOM OF EXCAVATION.
10. ALL FILL OR BACK FILL SHALL BE COMPACTED BY MECHANICAL MEANS TO A MINIMUM 90% RELATIVE COMPACTION AS DETERMINED BY THE ASTM D-1557. ALL FILL INSTALLATION SHALL REQUIRE CERTIFICATION BY THE JURISDICTIONAL AGENCY PRIOR TO FOUNDATION INSTALLATION.
11. ALL GRADING SLOPES SHALL BE PLANTED AND SPRINKLERED.
12. MAN-MADE FILL SHALL BE COMPACTED TO A MINIMUM RELATIVE COMPACTION OF 90% COHESIONLESS SOILS WITH LESS THAN 15% FINER THAN .005 MM REQUIRE 95% COMPACTION.
13. ALL UTILITY COVERS, INLETS, VAULTS, CATCH BASINS, ETC. SHALL BE ADJUSTED TO THE NEW DESIGN GRADES.

ESTIMATED EARTHWORK QUANTITY

ESTIMATED CUT = 1575 CY
ESTIMATED FILL = 1525 CY

NOTES:

1. THE ESTIMATED QUANTITIES PROVIDED ABOVE ARE FOR REFERENCE ONLY TO BE USED FOR JURISDICTIONAL PLAN CHECKING AND PERMITTING PURPOSES ONLY.
2. ESTIMATED EARTHWORK ABOVE IS BASED ON DESIGN FINISH GRADES TO EXISTING GRADES IN TOPOGRAPHICAL SURVEY. THE ESTIMATED EARTHWORK DOES NOT CONSIDER THE THICKNESS OF EACH PAVEMENT MATERIAL, FOUNDATION AND SLAB ON GRADE VOLUMES, THE REMOVAL OF ANY UNSUITABLE MATERIAL, AND THE REMOVAL OF EXISTING BASEMENTS, PITS, VAULTS, TOP SOIL OR VEGETATION.
3. THE ESTIMATED EARTHWORK QUANTITIES DO NOT INCLUDE SHRINKAGE FACTORS DUE TO COMPACTION OR ANY OVER EXCAVATION QUANTITIES.
4. CONTRACTOR SHALL PERFORM DETAILED QUANTITY TAKE-OFF BASED ON THE EXISTING AND NEW ELEVATIONS PROVIDED ON THESE DOCUMENTS AND INFORMATION PROVIDED IN THE SPECIFICATIONS AND GEOTECHNICAL REPORTS NECESSARY FOR HIS BID AND WORK. VCA IS NOT RESPONSIBLE AND LIABLE FOR THE CONTRACTOR'S EARTHWORK CALCULATIONS.
5. ESTIMATED EARTHWORK QUANTITIES ABOVE ASSUME THAT ALL ON-SITE MATERIALS ARE SUITABLE FOR BACKFILLING. HOWEVER, ACTUAL EXISTING ON-SITE MATERIALS AND IMPORTED MATERIALS MUST FIRST BE APPROVED BY THE GEOTECHNICAL ENGINEER PRIOR TO INSTALLATION, REMOVAL, OR REPLACEMENT.

SITE GRADING PLAN

10 5 0 10 20

SCALE: 1" = 20'

tBP
architecture planning interiors management
tBP/architecture
5455 Wilshire Boulevard, Suite 1200
Los Angeles, CA 90036-4242
ph: 323. 556. 3788 fx: 323. 556. 3799
architect

LICENSED ARCHITECT
STATE OF CALIFORNIA

VCA ENGINEERS INC.
CIVIL • STRUCTURAL
3601 Medford Street Los Angeles, CA 90063
Tel: 323.729.6088 Fax: 323.729.6043
VIRGILIO C. ACAMAN, RCE36079
3/1/2010
DATE
REGISTERED PROFESSIONAL ENGINEER
VIRGILIO C. ACAMAN
No. C36079
Exp. 6/30/10
CIVIL
STATE OF CALIFORNIA
consultant

IDENTIFICATION STAMP
DIV. OF THE STATE ARCHITECT
OFFICE OF REGULATION SERVICES
File No. 19-C11
Appl No. 03-112201
AC ____ FLS ____ SS ____
DATE ____

DSA Los Angeles Basin Regional Office
700 North Alameda Street, Suite 5-500
Los Angeles, California 90012
ph: 213/897-3995 fx: 213/897-3159/0726
agency

ANTELOPE VALLEY COLLEGE HEALTH & SCIENCE BUILDING

Antelope Valley Community College District
3041 West Avenue K
Lancaster, CA. 93536-5426

owner

tBP project number : 20641.00
file name:
drawn by: AL checked by: VCA
date: JULY 30, 2009 - 100% CD

Rev:	date:	description:
1	11/16/09	ADDENDUM #1
2	02/26/10	ADDENDUM #2

THIS DRAWING AND THE DESIGNS, DEPICTIONS, IDEAS AND OTHER INFORMATION CONTAINED HEREIN CONSTITUTE UNPUBLISHED WORK OF tBP/ARCHITECTURE AND SHALL REMAIN THE PROPERTY OF tBP/ARCHITECTURE IN PERPETUITY. NO PART THEREOF SHALL BE REPRODUCED, DISCLOSED, DISTRIBUTED, SOLD, PUBLISHED OR OTHERWISE USED IN ANY WAY WITHOUT THE ADVANCED EXPRESS WRITTEN CONSENT OF tBP/ARCHITECTURE.

drawing title:

SITE GRADING PLAN

drawing no.:

C-3.00

drawing 4 of 15

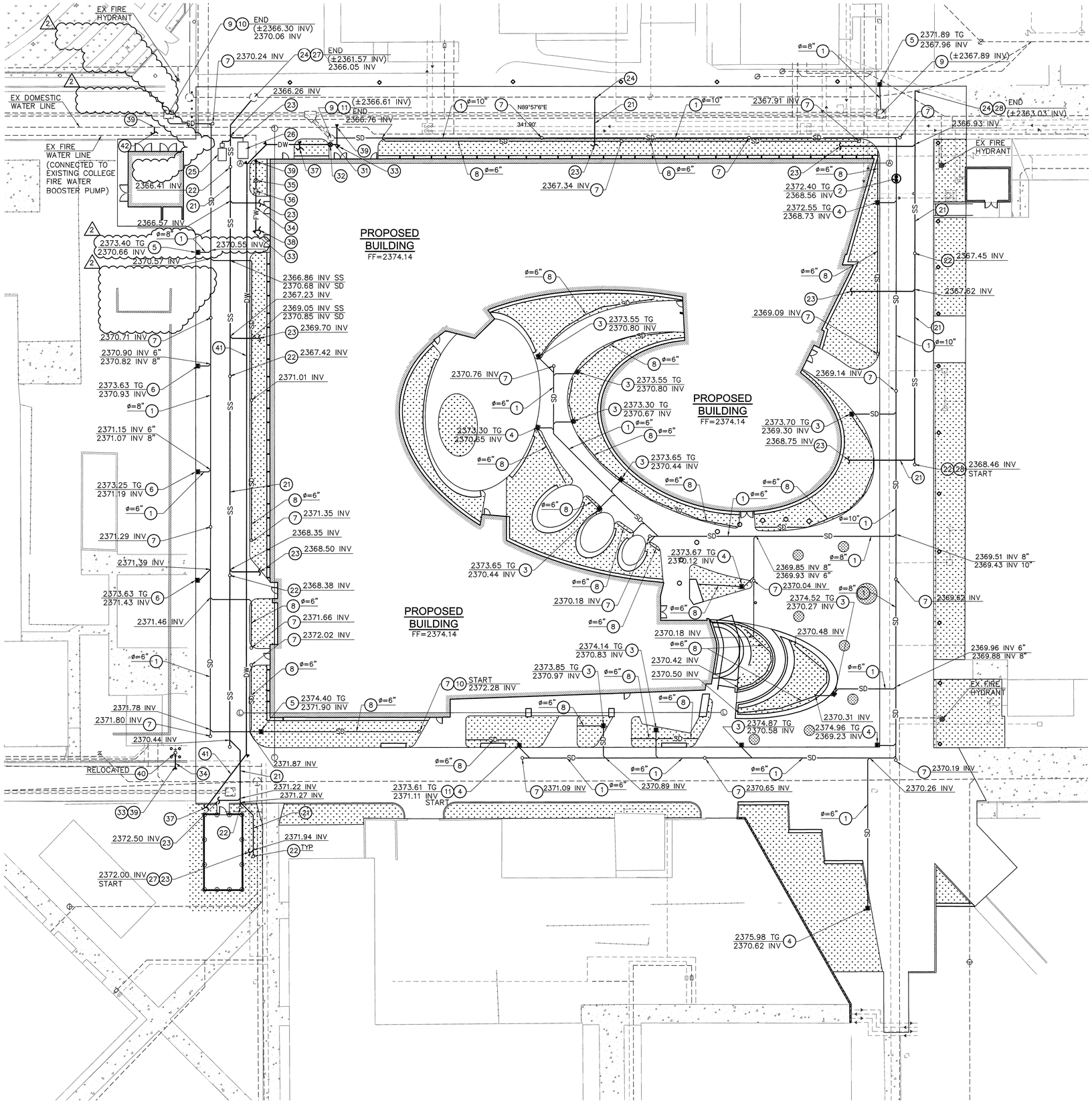

CONSTRUCTION NOTES:

STORM DRAIN

1. INSTALL SDR 35 PVC PIPE. SEE PLAN FOR SIZE.
2. INSTALL STORM WATER CLARIFIER PER CDS UNIT PMSU 20–15.
3. CONSTRUCT 12"X12" CATCH BASIN PER DETAIL 5 ON SHEET C–7.00 OR APPROVED EQUAL.
4. CONSTRUCT 18"X18" CATCH BASIN PER DETAIL 5 ON SHEET C–7.00 OR APPROVED EQUAL.
5. CONSTRUCT 24"X24" CATCH BASIN WITH FOSSIL FILTER PER DETAIL 5 ON SHEET C–7.00 OR APPROVED EQUAL.
6. CONSTRUCT 18"X18" CATCH BASIN WITH FOSSIL FILTER PER DETAIL 5 ON SHEET C–7.00 OR APPROVED EQUAL.
7. INSTALL STORM DRAIN CLEANOUT PER APWA STANDARD PLAN 204–1.
8. INSTALL FRENCH DRAIN PER DETAIL 6 ON SHEET C–7.00. SEE PLAN FOR SIZE.
9. CONNECT TO EXISTING STORM DRAIN LINE PROVIDED BY THE COLLEGE. VERIFY IN FIELD EXACT LOCATION AND ELEVATION.
10. STORM DRAIN PROFILE 1 PER SHEET C–6.00.
11. STORM DRAIN PROFILE 2 PER SHEET C–6.00.

SEWER

21. INSTALL 6" ABS PVC PIPE.
22. INSTALL SEWER CLEANOUT PER APWA STANDARD PLAN 204–1.
23. CONNECT TO BUILDING SEWER LINE. COORDINATE WITH PLUMBING DRAWINGS. PROVIDE REDUCING FITTINGS AS NEEDED.
24. CONNECT TO EXISTING SEWER MANHOLE PROVIDED BY THE COLLEGE. VERIFY IN FIELD LOCATION AND INVERT ELEVATION.
25. GREASE INTERCEPTOR PER PLUMBING DRAWINGS.
26. NEUTRALIZING TANK PER PLUMBING DRAWINGS.
27. SEWER PROFILE 1 PER SHEET C–6.10.
28. SEWER PROFILE 2 PER SHEET C–6.10.

WATER

31. NSTALL 4" AWWA C900 PVC, CLASS 200, DR14. DOMESTIC WATER LINE.
32. GATE VALVE PER APWA STANDARD PLAN 503–3.
33. INSTALL THRUST BLOCK PER DETAIL 7 ON SHEET C–7.00.
34. INSTALL 6" AWWA C900 PVC, CLASS 200, DR14. FIRE WATER LINE.
35. INSTALL POST INDICATOR VALVE PER DETAIL 1 ON SHEET C–7.10.
36. INSTALL FIRE DEPARTMENT CONNECTION PER DETAIL 2 ON SHEET C–7.10.
37. CONNECT TO BUILDING DOMESTIC WATER LINE. COORDINATE WITH PLUMBING DRAWINGS. PROVIDE REDUCING FITTINGS AS NEEDED.
38. CONNECT TO BUILDING FIRE WATER LINE/FIRE RISER. COORDINATE WITH PLUMBING DRAWINGS. PROVIDE REDUCING FITTINGS AS NEEDED.
39. CONNECT TO EXISTING WATER LINE PROVIDED BY THE COLLEGE. VERIFY IN FIELD LOCATION.
40. FIRE HYDRANT PER DETAIL 4 ON SHEET C–7.10.
41. INSTALL 1" COPPER PIPE, TYPE L.
42. INSTALL 2–1/2" COPPER PIPE, TYPE L. REFER TO LANDSCAPE DRAWINGS FOR CONTINUATION.

UTILITY PLAN

10 5 0 10 20

SCALE: 1" = 20'

tBP
architecture planning interiors management
tBP/Architecture
5455 Wilshire Boulevard, Suite 1200
Los Angeles, CA 90036–4242
ph: 323. 556. 3788 fx: 323. 556. 3799
LICENSED ARCHITECT STATE OF CALIFORNIA
architect

VCA ENGINEERS, INC.
CIVIL • STRUCTURAL
2361 Medford Street Los Angeles, CA 90063
Tel. 323.729.6068 Fax: 323.729.6043
VINOD C. ALAMANI, RCE36079
7/1/10 DATE
REGISTERED PROFESSIONAL ENGINEER VINOD C. ALAMANI No. C36079 Exp. 6/30/10 CIVIL STATE OF CALIFORNIA
consultant

IDENTIFICATION STAMP
DIV. OF THE STATE ARCHITECT
OFFICE OF REGULATION SERVICES
File No. 19–C11
Appl No. 03–112291
AC ____ FLS ____ SS ____
DATE ____

DSA Los Angeles Basin Regional Office
700 North Alameda Street, Suite 5–500
Los Angeles, California 90012
ph: 213/897–3995 fx: 213/897–3159/0726
agency

ANTELOPE VALLEY COLLEGE HEALTH & SCIENCE BUILDING

Antelope Valley Community College District
3041 West Avenue K
Lancaster, CA. 93536–5426

owner

tBP project number : 20641.00

file name:

drawn by: AL checked by:VCA

date: JULY 30, 2009 – 100% CD

Rev:	date:	description:
1	11/16/09	ADDENDUM #1
2	02/26/10	ADDENDUM #2

THIS DRAWING AND THE DESIGNS, DEPICTIONS, IDEAS AND OTHER INFORMATION CONTAINED HEREIN CONSTITUTE UNPUBLISHED WORK OF tBP/ARCHITECTURE AND SHALL REMAIN THE PROPERTY OF tBP/ARCHITECTURE IN PERPETUITY. NO PART THEREOF SHALL BE REPRODUCED, DISCLOSED, DISTRIBUTED, SOLD, PUBLISHED OR OTHERWISE USED IN ANY WAY WITHOUT THE ADVANCED EXPRESS WRITTEN CONSENT OF tBP/ARCHITECTURE.

drawing title:

UTILITY PLAN

drawing no.:

C-4.00

drawing 5 of 15

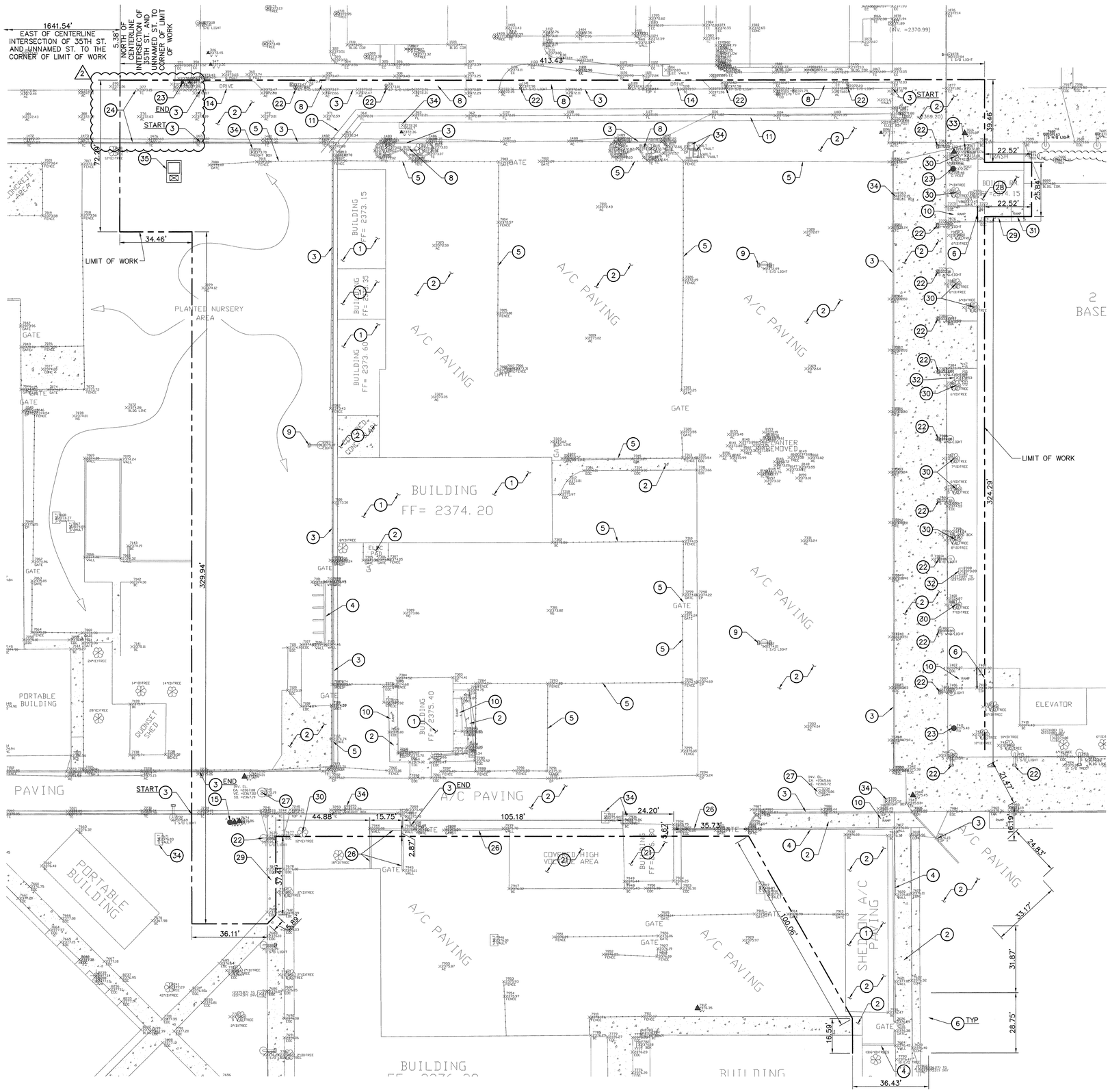

GENERAL NOTES:

1. ALL EXISTING STREET IMPROVEMENTS, UNLESS OTHERWISE INDICATED HEREIN TO BE REMOVED, SHALL BE PROTECTED IN PLACE. THESE ITEMS INCLUDE LIGHT POLES, POWER POLES, SIGNAL POLES AND APPURTENANCES.
2. CONTRACTOR SHALL NOTIFY ALL UTILITY OWNERS BOTH IN PRIVATE PROPERTY AND IN PUBLIC RIGHT OF WAY FOR EXISTING LATERALS TO BE REMOVED OR CAPPED.
3. ALL EXISTING VALVE AND METER BOXES ALONG THE SIDEWALK SHALL BE ADJUSTED TO NEW SIDEWALK GRADES. CUT EXISTING PIPE FEEDING THE PROPERTIES AND CAP AT THE METER. EXISTING METER TO REMAIN AND TO BE PROTECTED, UNLESS OTHERWISE DIRECTED BY THE UTILITY OWNER/DRAWINGS.
4. ALL UTILITIES TO BE VERIFIED IN FIELD BY THE CONTRACTOR TO ENSURE NOT SERVING EXISTING FACILITIES TO REMAIN. COORDINATE RELOCATION IF REQUIRED.
5. REMOVE EXISTING SEWER LINES, CLEANOUTS, MANHOLES, UNLESS OTHERWISE INDICATED. CUT PIPE AND CAP PIPE ENDS. SEE UTILITY PLAN.
6. REMOVE EXISTING WATER LINES, UNLESS OTHERWISE INDICATED. TURN OFF WATER AT SOURCE, CUT AND CAP PIPE AT LIMIT OF REMOVAL LINE AND REMOVE WATER LINE WITHIN REMOVAL LIMITS, REFER TO UTILITY PLAN FOR NEW ROUTE AND POINT OF CONNECTION.
7. REMOVE EXISTING STORM DRAIN LINES, CLEANOUTS, MANHOLES UNLESS OTHERWISE INDICATED. REFER TO UTILITY PLAN FOR NEW ROUTE AND POINT OF CONNECTION.
8. REMOVE EXISTING IRRIGATION LINES, AND SPRINKLERS, UNLESS OTHERWISE INDICATED. TURN OFF WATER AT SOURCE, CUT AND CAP PIPE AT LIMIT OF REMOVAL LINE AND REMOVE IRRIGATION LINE WITH REMOVAL LIMITS, SEE LANDSCAPE DRAWINGS.
9. FOR DEMOLITION AND REMOVAL OF EXISTING ELECTRICAL, POWER, TELEPHONE, AND COMMUNICATIONS SYSTEMS ON SITE, SEE BID PACKAGE.
10. COORDINATE TREE REMOVAL WITH LANDSCAPE PLANS. IN CASE OF CONFLICT, LANDSCAPE PLANS WILL GOVERN.
11. THE CONTRACTOR SHALL PHASE HIS CONSTRUCTION IN ORDER TO ENSURE ADA COMPLIANT ACCESS AT ALL TIMES TO ALL BUILDING STRUCTURES.
12. CONTRACTOR SHALL REMOVE EXISTING UNDERGROUND OIL TANK AND CAR HYDRAULIC JACK AFTER EMPTYING FLUIDS FROM THE RESPECTIVE EQUIPMENT. CONTRACTOR SHALL TAKE EQUIPMENT AND FLUIDS TO AN APPROVED DISPOSAL FACILITY AND OBTAIN A MANIFEST FOR PROPER DISPOSAL OF EQUIPMENT AND FLUIDS.
13. CONTRACTOR SHALL REMOVE HIGH ZINC CONTENT FILTERS FROM THE EXISTING PAINT BOOTH NEXT TO THE SUBSTATION SCHEDULED TO BE PALLETIZED. CONTRACTOR SHALL BAG AND ENCAPSULATE FILTERS AND VACUUM DUST BEFORE DISPOSING SUCH IN AN APPROPRIATE MANNER. CONTRACTOR SHALL OBTAIN MANIFEST FOR PROPER DISPOSAL OF FILTERS AND ASSOCIATE DUST.

2

REMOVAL NOTES:

1. EXISTING BUILDING AND IT'S ENTIRETY.
2. EXISTING PAVEMENT AND IT'S BASE.
3. EXISTING CURB / CURB AND GUTTER.
4. EXISTING WALL.
5. EXISTING FENCE / GATE.
6. SAWCUT EXISTING PAVEMENT.
7. EXISTING TREE.
8. CLEAR AND GRUB EXISTING PLANTER.
9. EXISTING LIGHT POST.
10. EXISTING RAMP.
11. EXISTING CONCRETE GUTTER.
12. EXISTING BACKFLOW PREVENTER.
13. EXISTING NURSERY.
14. EXISTING DRIVEWAY.
15. EXISTING FIRE HYDRANT.

PROTECT IN PLACE:

21. EXISTING BUILDING.
22. EXISTING LIGHT POST.
23. EXISTING FIRE HYDRANT.
24. EXISTING CURB / CURB AND GUTTER.
25. EXISTING FENCE / GATE.
26. EXISTING WALL.
27. EXISTING MANHOLE. ADJUST MANHOLE TO FINISH GRADE.
28. EXISTING BOILER ROOM.
29. EXISTING PAVEMENT.
30. EXISTING TREE.
31. EXISTING RAMP.
32. EXISTING CATCH BASIN / DRAIN.
33. EXISTING BACKFLOW PREVENTER.
34. EXISTING LIGHT BOX / ELECTRICAL VAULT.
35. EXISTING ELECTRICAL VAULT AND SWITCH.

DEMOLITION PLAN

10 5 0 10 20

SCALE: 1" = 20'

architecture planning interiors management

tBP/Architecture
5455 Wilshire Boulevard, Suite 1200
Los Angeles, CA 90036-4242
ph: 323. 556. 3788 fx: 323. 556. 3799

LICENSED ARCHITECT — STATE OF CALIFORNIA

architect

VCA ENGINEERS, INC.
CIVIL ENGINEERS
3861 Medford Street Los Angeles, CA 90063
Tel. 323.729.6098 Fax. 323.729.9043
VIRGILIO C. ACANAL RCE36079
DATE 3/2/10
REGISTERED PROFESSIONAL ENGINEER — VIRGILIO C. ACANAL — No. C36079 — Exp. 6/30/10 — CIVIL — STATE OF CALIFORNIA

consultant

IDENTIFICATION STAMP
DIV. OF THE STATE ARCHITECT
OFFICE OF REGULATION SERVICES
File No. 19-C11
Appl No. 03-112291
AC.____ FLS.____ SS.____
DATE ____

DSA Los Angeles Basin Regional Office
700 North Alameda Street, Suite 5-500
Los Angeles, California 90012
ph: 213/897-3995 fx: 213/897-3159/0726

agency

ANTELOPE VALLEY COLLEGE HEALTH & SCIENCE BUILDING

Antelope Valley Community College District
3041 West Avenue K
Lancaster, CA. 93536-5426

owner

tBP project number : 20641.00

file name:

drawn by: AL checked by:VCA

date: JULY 30, 2009 - 100% CD

Rev:	date:	description:
1	11/16/09	ADDENDUM #1
2	02/26/10	ADDENDUM #2

THIS DRAWING AND THE DESIGNS, DEPICTIONS, IDEAS AND OTHER INFORMATION CONTAINED HEREIN CONSTITUTE UNPUBLISHED WORK OF tBP/ARCHITECTURE AND SHALL REMAIN THE PROPERTY OF tBP/ARCHITECTURE IN PERPETUITY. NO PART THEREOF SHALL BE REPRODUCED, DISCLOSED, DISTRIBUTED, SOLD, PUBLISHED OR OTHERWISE USED IN ANY WAY WITHOUT THE ADVANCED EXPRESS WRITTEN CONSENT OF tBP/ARCHITECTURE.

drawing title:

DEMOLITION PLAN

drawing no.:

DC-1.00

drawing 15 of 15

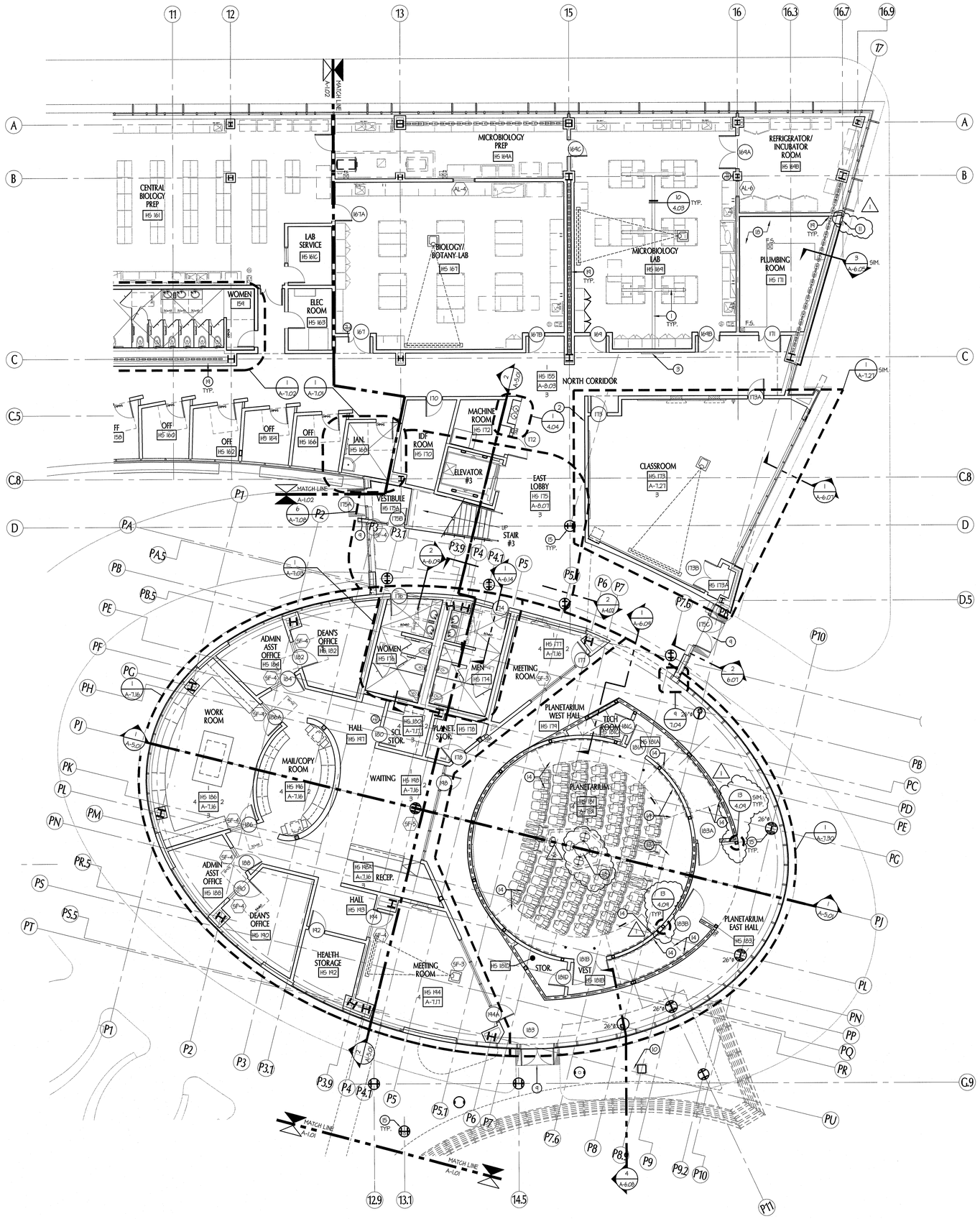

PARTIAL FIRST FLOOR PLAN - EAST WING

SCALE: 1/8" = 1'-0"

0 2' 4' 8' 16'

NORTH

KEYNOTES

1. PIPE TRENCH W/ COVER TO MATCH ADJACENT FLOORING. COORDINATE LOCATION OF TRENCH WITH LABORATORY PLUMBING DRAWINGS. SEE DETAIL 10/4.03
2. TACKABLE WALL COVERING
3. DISPLAY BOARD CASE
4. 1 ½" DIA. STAINLESS STEEL PIPE RAIL @ 4" A.F.F. WITH VERTICAL SUPPORT, SEE DETAIL 7/2.01
5. CEILING MOUNTED TRACK FOR CURTAIN. PROVIDE WAND WITH LOOP @ END SO PERSON CAN OPERATE WITHOUT GRASPING, TYPICAL. END OF WAND, EXCLUDING LOOP, SHALL BE 48" AFF MAX. SEE DETAIL 14/4.03
6. LIGHT COVE BELOW
7. METAL CATWALK LADDER. SEE DETAIL 3/13.01
8. METAL CATWALK, SEE STRUCTURAL DWGS.
9. RECESSED ALUMINUM & VINYL FOOT GRILLE
10. FLOOR DRAIN, SEE PLUMBING DRAWINGS. SLOPE FLOOR TO DRAIN AT 1/8" - 1/4" PER FOOT, TYP.
11. 20" METAL LOUVER, SEE EXTERIOR ELEVATION & SPECS
12. ALTERNATE #4: FUTURE METAL STUD / GYPSUM BOARD WALL, FUTURE CASE WORK, FUTURE EQUIPMENT, SHOWN DOTTED ON PLAN. SEE FOOD SERVICE DRAWINGS.
13. PLANETARIUM PROJECTOR, PLATFORM, GUARD RAIL, AND CONTROL DESK, N.I.C.
14. ALTERNATE #6: FUTURE PLANETARIUM SLOPED FLOOR, RAMPS WITHIN PLANETARIUM AND IN ENTRANCE VESTIBULES, RAILINGS FOR RAMPS, FIXED SEATING.
15. METAL COLUMN COVER, SEE SIM. DETAILS 1, 2, & 3/4.04. 24" DIAMETER UNLESS NOTED OTHERWISE ON PLAN.
16. FIRE RATED DUCT ENCLOSURE. SEE 1/A-5.01 & 16/4.08
17. 1-1/2" DIA. PAINTED STEEL PIPE RAIL AT 42" A.F.F. SEE DETAIL 4/13.01.
18. CONCRETE HOUSEKEEPING PAD FOR EQUIPMENT, TYP. SEE MECH. & STRUCT. FOUNDATION DWGS FOR PAD DIMENSIONS.
19. NO CONNECTION (WELD, SHOTPIN, SCREW, ETC.) TO STRUCTURAL BRACES AND/OR GUSSET PLATES IS PERMISSIBLE UNLESS NOTED OTHERWISE ON THE STRUCTURAL DRAWINGS.
20. EXTERIOR FLOOR DRAIN. SEE DETAIL 12/4.04
21. TELESCOPE SUPPORT COLUMN. SEE STRUCTURAL DWGS., & DETAIL 13/4.04
22. LINE OF STRUCTURAL CONCRETE PEDESTAL, FLUSH WITH PAVING.
23. EDGE OF SLAB BELOW. SEE STRUCTURAL DRAWINGS.

GENERAL NOTES

1. KEYNOTES ARE STANDARD FOR ALL FLOOR PLANS. NOT ALL NOTES USED ON A PARTICULAR SHEET.
2. CANOPIES / PROJECTIONS SHALL BE SPRINKLERED PER NFPA 13 FOR COMBUSTIBLE PROJECTIONS.
3. ALL BUILDINGS ARE FULLY SPRINKLERED.
4. ALL INTERIOR STUD WALLS TO BE PROVIDED WITH SOUND BATT INSULATION FULL HEIGHT OF GYP. BOARD, TYP.
5. CONTRACTOR SHALL BE RESPONSIBLE FOR DUST CONTROL.
6. THE DRAWINGS AND SPECIFICATIONS DO NOT INCLUDE NECESSARY COMPONENTS OF CONSTRUCTION SAFETY.
7. WATER-RESISTANT GYPSUM BOARD IS TO BE USED IN ALL WET ROOMS (TOILET ROOMS, JANITOR'S CLOSETS, LAUNDRY ROOMS, KITCHENS, KITCHENETTES, ETC...), DRINKING FOUNTAIN AREAS AND WALLS AT SINKS.

LEGEND

INDICATES 1 HR. RATED FIRE BARRIER

FE6A — INDICATES RECESSED FIRE EXTINGUISHER CABINET - SEE 2A:10B:C RATED EXTINGUISHER

FE — INDICATES BRACKET MOUNTED FIRE EXTINGUISHER - SEE 2A:10B:C RATED EXTINGUISHER

1 / 4.03 — 23 / 4.01 SIM

LABORATORY CASEWORK / EQUIPMENT SEE LABORATORY DRAWINGS, SHEETS LF-, LP-, & LE-

REFER TO SHEET T-3 FOR STANDARD REFERENCE SYMBOLS AND WALL TYPES.

KEY PLAN

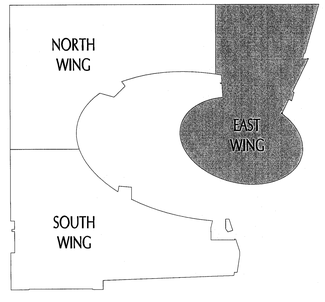

NORTH

tBP
architecture
planning
interiors
management

tBP/Architecture
5455 Wilshire Boulevard, Suite 1200
Los Angeles, CA 90036-4242
ph: 323. 556. 3788 fx: 323. 556. 3799

LICENSED ARCHITECT
STATE OF CALIFORNIA

architect

consultant

IDENTIFICATION STAMP
DIV. OF THE STATE ARCHITECT
OFFICE OF REGULATION SERVICES
File No. 19-C11
Appl No. 03-112201
AC ____ FLS ____ SS ____
DATE ____

DSA Los Angeles Basin Regional Office
700 North Alameda Street, Suite 5-500
Los Angeles, California 90012
ph: 213/897-3995 fx: 213/897-3159/0726

agency

ANTELOPE VALLEY COLLEGE HEALTH & SCIENCE BUILDING

ANTELOPE VALLEY COMMUNITY COLLEGE DISTRICT
3041 WEST AVENUE K
LANCASTER, CA 93536-5426

owner

tBP project number : 206411.00

file name: A-0103-IFP.DWG

drawn by: JS, MH, JT checked by: MK

date: JULY 30, 2009 - 100% CD

Rev:	date:	description:
1	11/16/09	ADDENDUM #1
2	2/26/10	ADDENDUM #2

THIS DRAWING AND THE DESIGNS, DEPICTIONS, IDEAS AND OTHER INFORMATION CONTAINED HEREIN CONSTITUTE UNPUBLISHED WORK OF tBP/ARCHITECTURE AND SHALL REMAIN THE PROPERTY OF tBP/ARCHITECTURE IN PERPETUITY. NO PART THEREOF SHALL BE REPRODUCED, DISCLOSED, DISTRIBUTED, SOLD, PUBLISHED OR OTHERWISE USED IN ANY WAY WITHOUT THE ADVANCED EXPRESS WRITTEN CONSENT OF tBP/ARCHITECTURE.

drawing title:

PARTIAL 1ST FLR. PLAN
EAST WING

drawing no.:

A-1.03

drawing - of -

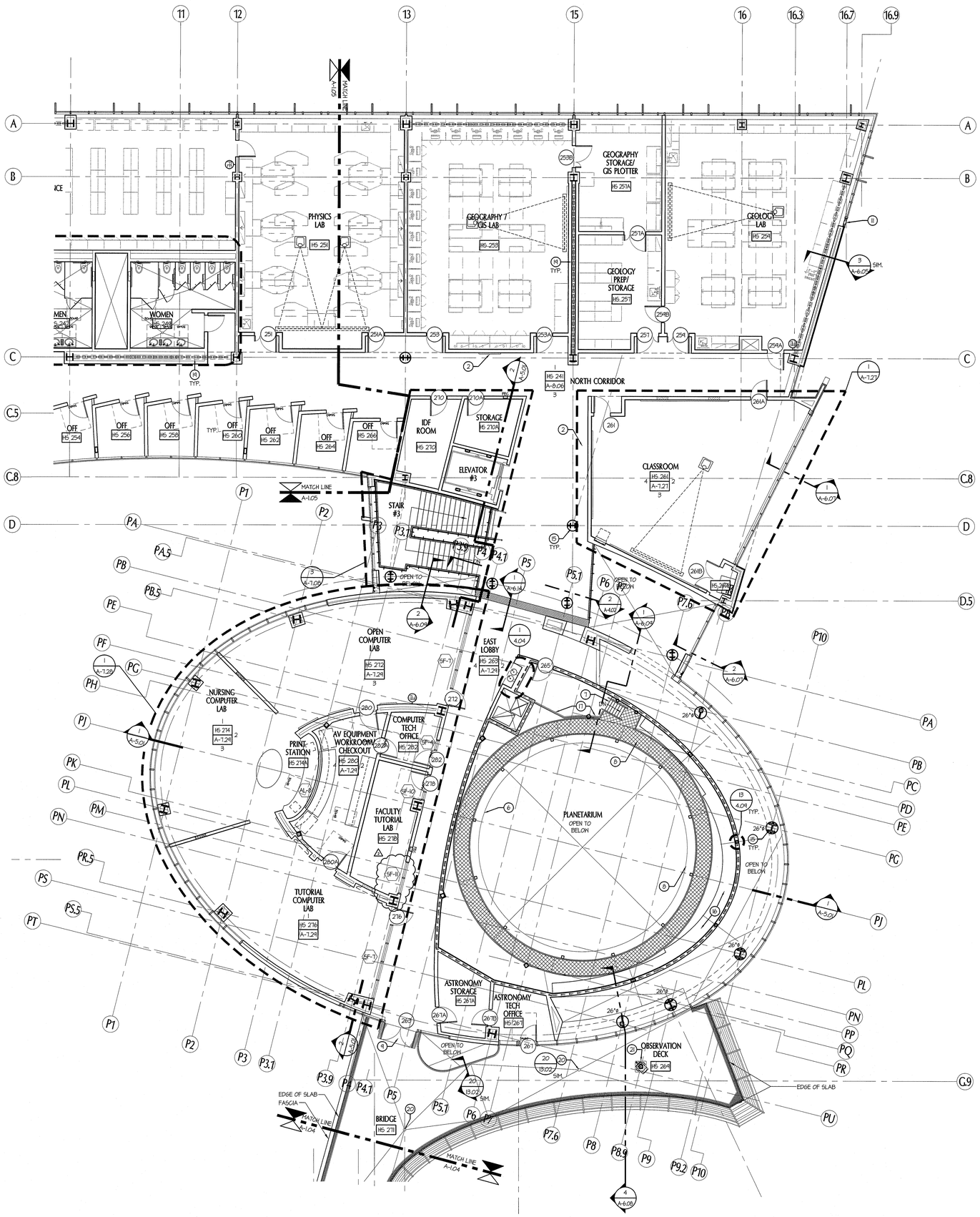

PARTIAL SECOND FLOOR PLAN - EAST WING

SCALE: 1/8" = 1'-0"

KEYNOTES

1. PIPE TRENCH W/ COVER TO MATCH ADJACENT FLOORING. COORDINATE LOCATION OF TRENCH WITH LABORATORY PLUMBING DRAWINGS. SEE DETAIL 10/4.03
2. TACKABLE WALL COVERING
3. DISPLAY BOARD CASE
4. 1.5" DIA. STAINLESS STEEL PIPE RAIL @ 4" A.F.F. WITH VERTICAL SUPPORT, SEE DETAIL 1/2.01
5. CEILING MOUNTED TRACK FOR CURTAIN. PROVIDE WAND WITH LOOP @ END SO PERSON CAN OPERATE WITHOUT GRASPING, TYPICAL. END OF WAND, EXCLUDING LOOP, SHALL BE 48" AFF MAX. SEE DETAIL 14/4.03
6. LIGHT COVE BELOW
7. METAL CATWALK LADDER. SEE DETAIL 3/13.01
8. METAL CATWALK, SEE STRUCTURAL DWGS.
9. RECESSED ALUMINUM & VINYL FOOT GRILLE
10. FLOOR DRAIN, SEE PLUMBING DRAWINGS. SLOPE FLOOR TO DRAIN AT 1/8" - 1/4" PER FOOT, TYP.
11. 20" METAL LOUVER, SEE EXTERIOR ELEVATION & SPECS
12. ALTERNATE #4: FUTURE METAL STUD / GYPSUM BOARD WALL, FUTURE CASE WORK, FUTURE EQUIPMENT, SHOWN DOTTED ON PLAN. SEE FOOD SERVICE DRAWINGS.
13. PLANETARIUM PROJECTOR AND CONTROL DESK, N.I.C.
14. ALTERNATE #6: FUTURE PLANETARIUM SLOPED FLOOR, RAMPS WITHIN PLANETARIUM AND IN ENTRANCE VESTIBULES, RAILINGS FOR RAMPS, FIXED SEATING.
15. METAL COLUMN COVER, SEE SIM. DETAILS 1, 2, & 3/4.09. 24" DIAMETER UNLESS NOTED OTHERWISE ON PLAN.
16. FIRE RATED DUCT ENCLOSURE. SEE 1/A-5.01 & 16/4.08
17. 1-1/2" DIA. PAINTED STEEL PIPE RAIL AT 42" A.F.F. SEE DETAIL 4/13.01.
18. CONCRETE HOUSEKEEPING PAD FOR EQUIPMENT, TYP. SEE MECH. & STRUCT. FOUNDATION DWGS FOR PAD DIMENSIONS.
19. NO CONNECTION (WELD, SHOTPIN, SCREW, ETC.) TO STRUCTURAL BRACES AND/OR GUSSET PLATES IS PERMISSIBLE UNLESS NOTED OTHERWISE ON THE STRUCTURAL DRAWINGS.
20. EXTERIOR FLOOR DRAIN. SEE DETAIL 12/4.04
21. TELESCOPE SUPPORT COLUMN. SEE STRUCTURAL DWGS., & DETAIL 13/4.04
22. LINE OF STRUCTURAL CONCRETE PEDESTAL, FLUSH WITH PAVING.
23. EDGE OF SLAB BELOW. SEE STRUCTURAL DRAWINGS.

GENERAL NOTES

1. KEYNOTES ARE STANDARD FOR ALL FLOOR PLANS. NOT ALL NOTES USED ON A PARTICULAR SHEET.
2. CANOPIES / PROJECTIONS SHALL BE SPRINKLERED PER NFPA 13 FOR COMBUSTIBLE PROJECTIONS.
3. ALL BUILDINGS ARE FULLY SPRINKLERED.
4. ALL INTERIOR STUD WALLS TO BE PROVIDED WITH SOUND BATT INSULATION FULL HEIGHT OF GYP. BOARD, TYP.
5. CONTRACTOR SHALL BE RESPONSIBLE FOR DUST CONTROL.
6. THE DRAWINGS AND SPECIFICATIONS DO NOT INCLUDE NECESSARY COMPONENTS OF CONSTRUCTION SAFETY.
7. WATER-RESISTANT GYPSUM BOARD IS TO BE USED IN ALL WET ROOMS (TOILET ROOMS, JANITOR'S CLOSETS, LAUNDRY ROOMS, KITCHENS, KITCHENETTES, ETC...), DRINKING FOUNTAIN AREAS AND WALLS AT SINKS.

LEGEND

INDICATES 1 HR. RATED FIRE BARRIER

FEC — INDICATES RECESSED FIRE EXTINGUISHER CABINET - SEE 2A-10B-C RATED EXTINGUISHER

FE — INDICATES BRACKET MOUNTED FIRE EXTINGUISHER - SEE 2A-10B-C RATED EXTINGUISHER

1 / 4.03 — 23 / 4.01 SIM

LABORATORY CASEWORK / EQUIPMENT
SEE LABORATORY DRAWINGS, SHEETS LF-, LP-, & LE-

REFER TO SHEET T-3 FOR STANDARD REFERENCE SYMBOLS AND WALL TYPES.

KEY PLAN

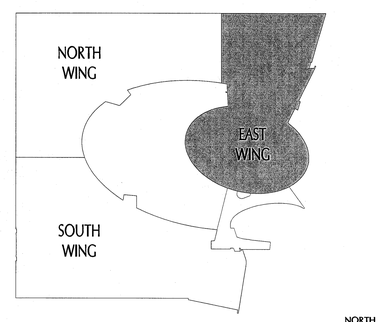

tBP
architecture
planning
interiors
management

LICENSED ARCHITECT
NO. C-17
STATE OF CALIFORNIA

tBP/Architecture
5455 Wilshire Boulevard, Suite 1200
Los Angeles, CA 90036-4242
ph: 323. 556. 3788 fx: 323. 556. 3799

architect

consultant

IDENTIFICATION STAMP
DIV. OF THE STATE ARCHITECT
OFFICE OF REGULATION SERVICES
File No. 19-C11
Appl No. 03-112201
AC ____ FLS ____ SS ____
DATE ____

DSA Los Angeles Basin Regional Office
700 North Alameda Street, Suite 5-500
Los Angeles, California 90012
ph: 213/897-3995 fx: 213/897-3159/0726

agency

ANTELOPE VALLEY COLLEGE HEALTH & SCIENCE BUILDING

ANTELOPE VALLEY COMMUNITY COLLEGE DISTRICT
3041 WEST AVENUE K
LANCASTER, CA 93536-5426

owner

tBP project number : 20641.00
file name: A-0106-2FP.DWG
drawn by: JS, MH, JT checked by: MK
date: JULY 30, 2009 - 100% CD

Rev:	date:	description:
2	2/26/10	ADDENDUM #2

THIS DRAWING AND THE DESIGNS, DEPICTIONS, IDEAS AND OTHER INFORMATION CONTAINED HEREIN CONSTITUTE UNPUBLISHED WORK OF tBP/ARCHITECTURE AND SHALL REMAIN THE PROPERTY OF tBP/ARCHITECTURE IN PERPETUITY. NO PART THEREOF SHALL BE REPRODUCED, DISCLOSED, DISTRIBUTED, SOLD, PUBLISHED OR OTHERWISE USED IN ANY WAY WITHOUT THE ADVANCED EXPRESS WRITTEN CONSENT OF tBP/ARCHITECTURE.

drawing title:
PARTIAL 2ND FLR. PLAN
EAST WING

drawing no.:
A-1.06
drawing - of -

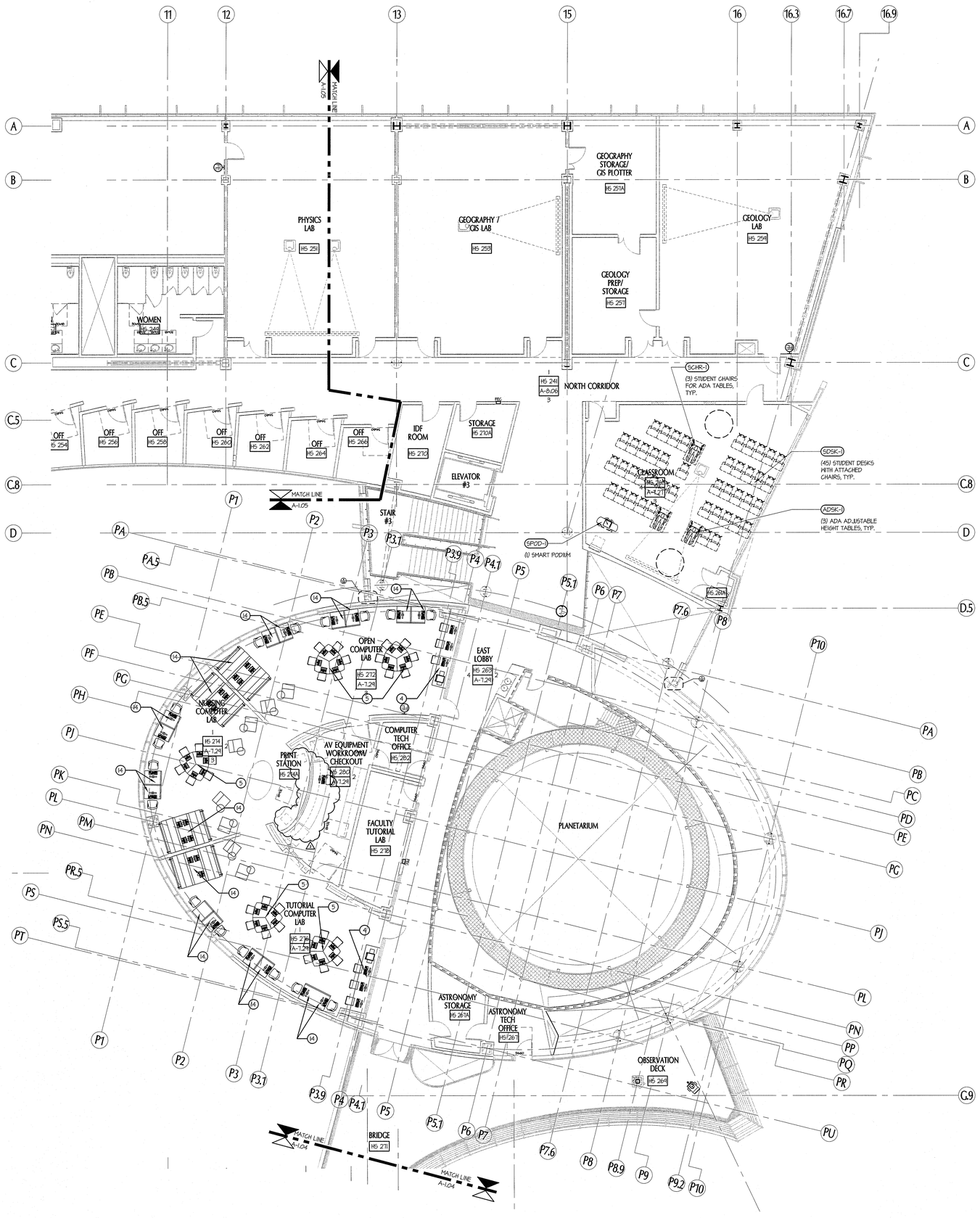

PARTIAL SECOND FLOOR FURNITURE PLAN - EAST WING

SCALE: 1/8" = 1'-0"

KEYNOTES

1. TYP. OFFICE LAYOUT
2. FURNITURE VENDOR TO PROVIDE CORD MANAGEMENT ACCESSORIES, TYP.
3. G.C. TO COORDINATE WITH FURNITURE VENDOR FOR POWER/DATA REQUIREMENTS FOR LECTURN.
4. COMPUTER WORK STATION
5. G.C. TO PROVIDE FOR HARD-WIRE POWER/DATA AT FLOOR TO ACCOMMODATE FOR COMPUTER STATIONS
6. NON-POWERED NESTED TABLES ON CASTERS, TYP. EMT LAB HS101
7. MOBILE METRO CART ON CASTERS FOR MANIKINS, QUANTITY (3).
8. FURNITURE VENDOR TO PROVIDE LEVELOR FOR TABLE BASE FOR TILE FINISH FLOOR SURFACE
9. FURNITURE VENDOR TO PROVIDE HEAVY DUTY CHAIR GLIDES FOR TILE FINISH FLOOR SURFACE
10. EXISTING FILE CABINETS TO BE RE-LOCATED, N.I.C.
11. G.C. TO PROVIDE POWER/DATA FLOOR BOXES FOR PLUG-AND-PLAY CONDITION
12. FIXED LECTURE TABLE
13. FIXED CACHET CHAIRS WITH PIVOT SEAT BY STEELCASE OR EQUAL TO
14. PLUG-AND-PLAY COMPUTER TABLE, TYP.
15. VENDING MACHINE MUST COMPLY WITH CALIFORNIA BUILDING CODE SECTION 1126B.
16. MINIMUM 5% OF SEATING MUST BE ACCESSIBLE.
17. KNEE SPACES FOR FIXED TABLES OR COUNTERS FOR PEOPLE IN WHEELCHAIRS MUST BE AT LEAST 27 INCHES HIGH, 30 INCHES WIDE, AND 19 INCHES DEEP.
18. THE TOPS OF TABLES AND COUNTERS SHALL BE 28 INCHES TO 34 INCHES FROM THE FLOOR OR GROUND.
19. WHERE A SINGLE COUNTER CONTAINS MORE THAN ONE TRANSACTION STATION, SUCH AS (BUT NOT LIMITED TO) A BANK COUNTER WITH MULTIPLE TELLER WINDOWS OR A RETAIL SALES COUNTER WITH MULTIPLE CASH REGISTER STATIONS, AT LEAST 5% BUT NEVER LESS THAN 1 OF EACH TYPE OF STATION SHALL BE LOCATED AT A SECTION OF COUNTER THAT IS AT LEAST 36 INCHES LONG AND NO MORE THAN 28 TO 34 INCHES HIGH.

FURNITURE DESIGNATIONS

ADSK-1	ADA ADJUSTABLE TABLE 1
CHR-1	STACKING SIDE CHAIR 1
CHR-2	SIDE CHAIR 2, WITH CASTERS
MCHR-1	MEETING CHAIR 1
ATBL-1	ADA COMPUTER TABLE 1
CTBL-1	COMPUTER TABLE 1
MTBL-1	MEETING TABLE 1
MTBL-2	MEETING TABLE 2
DCHR-1	DINING CHAIR 1
DTBL-1	DINING TABLE 1
DTBL-2	DINING TABLE 2
DTBL-3	DINING TABLE 3
ECHR-1	ERGONOMIC CHAIR 1
ECHR-2	ERGONOMIC CHAIR 2
FTS-1	FIXED TABLE AND SEAT-1 (LECTURE HALL 201)
FTS-2	ADA FIXED TABLE AND SEAT-2 (LECTURE HALL 201)
GCHR-1	GUEST CHAIR 1
GCHR-2	GUEST CHAIR 2
GCHR-3	GUEST CHAIR 3
ATFL-	LATERAL FILE 1
MCRT-1	MOBILE CART 1
MSTO-1	MULTI-STORAGE 1
MSTO-2	MULTI-STORAGE 2
SCHR-1	STUDENT DESK CHAIR 1
SDSK-1	STUDENT DESK WITH ATTACHED SEAT 1
SPOD-1	SMART PODIUM 1
TTBL-1	TRAINING TABLE 1
TTBL-2	TRAINING TABLE 2
WSTA-1	WORKSTATION-1 (DEAN'S OFFICES)
WSTA-2	WORKSTATION-2 (ADMIN. OFFICES)
WSTA-3	WORKSTATION-3 (FACULTY OFFICES)
FTS-1	FIXED TABLE AND SEAT-1 (LECTURE HALL 201)

GENERAL NOTES

1. KEYNOTES ARE STANDARD FOR ALL FURNITURE PLANS. NOT ALL NOTES USED ON A PARTICULAR SHEET.
2. ALL DIMENSIONS SHOWN ARE TO THE CENTER OF STUD, CENTER OF WINDOW/ DOOR, AND/ OR COLUMN GRID UNLESS NOTED OTHERWISE.

LEGEND

KEY PLAN

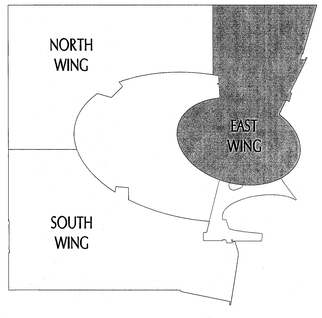

NORTH

tBP
architecture
planning
interiors
management

LICENSED ARCHITECT
STATE OF CALIFORNIA

tBP/architecture
5455 Wilshire Boulevard, Suite 1200
Los Angeles, CA 90036-4242
ph: 323. 556. 3788 fx: 323. 556. 3799

architect

consultant

IDENTIFICATION STAMP
DIV. OF THE STATE ARCHITECT
OFFICE OF REGULATION SERVICES
File No. 19-C11
Appl No. 03-112201
AC ____ FLS ____ SS ____
DATE ____

DSA Los Angeles Basin Regional Office
700 North Alameda Street, Suite 5-500
Los Angeles, California 90012
ph: 213/897-3995 fx: 213/897-3159/0726

agency

ANTELOPE VALLEY COLLEGE HEALTH & SCIENCE BUILDING

ANTELOPE VALLEY COMMUNITY COLLEGE DISTRICT
3041 WEST AVENUE K
LANCASTER, CA 93536-5426

owner

tBP project number : 20641.00

file name: A-0106-2FP-FURN.DWG

drawn by: TP checked by: MK

date: JULY 30, 2009 - 100% CD

Rev:	date:	description:
2	2/26/10	ADDENDUM #2

THIS DRAWING AND THE DESIGNS, DEPICTIONS, IDEAS AND OTHER INFORMATION CONTAINED HEREIN CONSTITUTE UNPUBLISHED WORK OF tBP/ARCHITECTURE AND SHALL REMAIN THE PROPERTY OF tBP/ARCHITECTURE. IN PERPETUITY, NO PART THEREOF SHALL BE REPRODUCED, DISCLOSED, DISTRIBUTED, SOLD, PUBLISHED OR OTHERWISE USED IN ANY WAY WITHOUT THE ADVANCED EXPRESS WRITTEN CONSENT OF tBP/ARCHITECTURE.

drawing title:

PARTIAL 2ND FLR. PLAN
EAST WING FURNITURE

drawing no.:

A-1.06F

drawing - of -

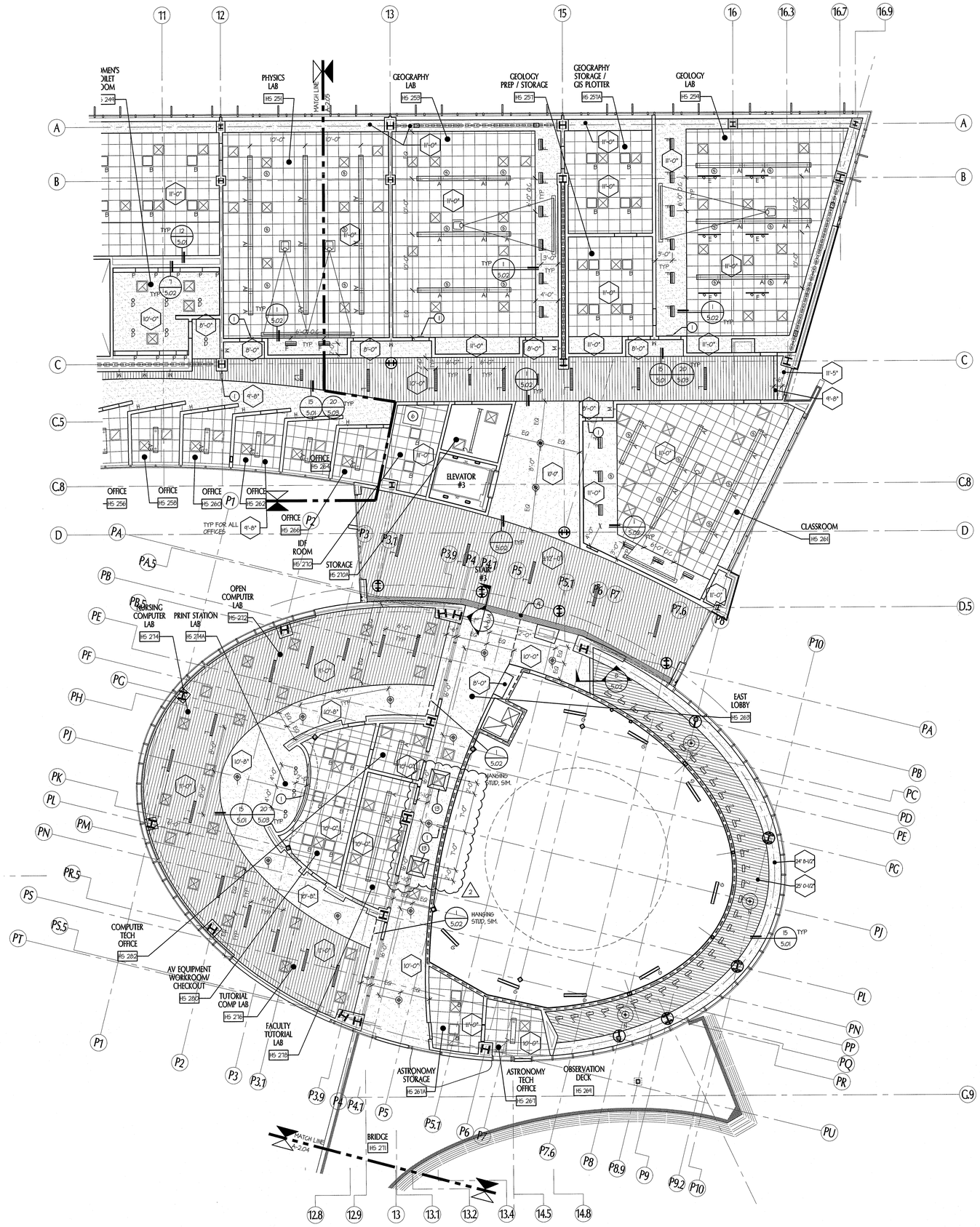

PARTIAL SECOND FLOOR REFLECTED CEILING PLAN - EAST WING

SCALE: 1/8" = 1'-0"

NORTH

GENERAL NOTES

1. KEYNOTES ARE STANDARD FOR ALL REFLECTED CEILING PLANS. NOT ALL NOTES USED ON A PARTICULAR SHEET.
2. ALL DIMENSIONS SHOWN ARE TO THE FACE OF STUD, CENTER OF WINDOW/ DOOR, AND/ OR COLUMN GRID UNLESS NOTED OTHERWISE.
3. COORDINATE NUMBER AND LOCATION OF ACCESS PANELS WITH MECH. DRAWINGS AND SPECIFICATIONS. CONTRACTOR WILL BE RESPONSIBLE FOR NUMBER AND LOCATION.
4. LOCATIONS OF ALL UTILITIES SHOWN ARE APPROXIMATE. CONTRACTOR SHALL EXERCISE EXTREME CAUTION IN EXCAVATING AND TRENCHING TO AVOID INTERCEPTING EXISTING PIPING OR CONDUIT. THE ARCHITECT IS NOT RESPONSIBLE FOR THE LOCATION OF UNDERGROUND UTILITIES OR STRUCTURES WHETHER OR NOT SHOWN OR DETAILED AND INSTALLED BY OTHER CONTRACTS. THE CONTRACTOR SHALL IMMEDIATELY NOTIFY THE OWNER SHOULD SUCH UNIDENTIFIED CONDITIONS BE DISCOVERED.

KEY NOTES

1. CLOCK
2. WALK OVER RECESSED LIGHT FIXTURES IN FLOOR BELOW
3. DISPLAY LIGHTING SEE, ELECTRICAL DWGS.
4. EXPANSION JOINT, SEE DETAILS 2/17/104 & STRUCTURAL DWGS.
5. CONTINUOUS LIGHT COVE, SUPPLY BY DOME MANUFACTURE. LED & BIAX LIGHTING
6. FAN COIL UNIT SEE, MECH DWGS.
7. FUME HOOD
8. CANOPY HOOD FOR AUTOCLAVES, SEE LAB DWGS.
9. EXAM LIGHTS, SEE LAB. DRAWINGS & STRUCTURAL DETAIL 7/S-6.10
10. SHOWER HEAD, SEE LAB. DRAWINGS
11. SNORKEL FUME EXHAUST, SEE LAB. DRAWINGS
12. MECHANICAL DUCT THROUGH CEILING FOR CHEMICAL SUPPLY CABINETS, SEE MECH. DWGS.
13. ALUMINUM FRAMED GLASS SKYLIGHT, SEE ROOF PLAN (2)

CEILING LEGEND

ACP-1	2 x 2 ACOUSTICAL PANEL CEILINGS, SEE DTL	6/5.03
ACP-2	2 x 2 WASHABLE ACOUSTICAL PANEL CEILINGS, SEE DTL	6/5.03
ACP-3	2 x 2 PERFORATED METAL PANEL CEILINGS	16/5.03, 17/5.03
	FRAMED GYPSUM BOARD CEILINGS, SEE CEILING JOIST SCHEDULE & DTL	5/5.02, 6/5.02
	SUSPENDED GYPSUM BOARD CEILINGS, SEE DTL	13/5.03
	UNDERSIDE OF STRUCTURE (UOS)	
ACP-4	PLANK CEILINGS SYSTEM, SEE DTL	19/5.03, 18/5.03, 20/5.03
MP-1	STANDING SEAM METAL PANEL	
	PLASTER CEILING, SEE DTL	11/5.02
	30" X 30" CEILING ACCESS DOOR, LOCKABLE. PROVIDE RECESS IN DOOR FOR AC TILE WHERE OCCURS	

LIGHTING LEGEND

(SEE ELECTRICAL DWGS. FOR MANUFACTURER & MODEL NO.)

A, A1, A2, A3, A4	PENDANT MOUNTED FIXTURE, FOR LATERAL BRACING, SEE DTL	6/4.03 SIM.
B	2 X 2 RECESSED FLUORESCENT FIXTURE	
C	1 X 4 SURFACE / SUSPENDED STRIP FIXTURE	
C	1 X 8 SURFACE / SUSPENDED STRIP FIXTURE FOR LATERAL BRACING, SEE DTL	6/4.03 SIM.
D	RECESSED DOWNLIGHT FIXTURE	
E	TRACK LIGHT FIXTURE	
F	1 X 2 RECESSED WALL WASH DIMMABLE FIXTURE	
G	LINEAR WRAPAROUND FIXTURE	
H	WALL RECESSED SLOT LED FIXTURE	
J	4" X 4 FLANGELESS CONTINUOUS RECESSED WALL WASH FIXTURE	
K	2 X 4 RECESSED FLUORESCENT FIXTURE	
L, L2	6" WIDE CEILING RECESSED SLOT FIXTURE L=6" X 4' L2= 6" X 2'	
M	3FT WALL SURFACE MOUNT MEDICAL FIXTURE	
M1	(E) WALL SURFACE MOUNT MEDICAL FIXTURE	
N	PENDANT MOUNTED FIXTURE, FOR LATERAL BRACING, SEE DTL	1 & 14/4.03
P	WALL SLOT PERIMETER FIXTURE	
R	DECORATIVE PENDANT MOUNTED FIXTURE FOR LATERAL BRACING, SEE DTL	
S	DECORATIVE PENDANT MOUNTED FIXTURE FOR LATERAL BRACING, SEE DTL	1 & 14/4.03 SIM.
T	PENDANT MOUNTED FIXTURE, FOR LATERAL BRACING, SEE DTL	1 & 14/4.03
T1	CEILING MOUNTED CIRCULAR FIXTURE,	
U	WALL MOUNTED UNDER CABINET FIXTURE	
V	2 X 2 RECESSED DIMMABLE VIDEO CONFERENCE (VTC) FIXTURE	
W	WALL RECESSED SLOT FLUORESCENT FIXTURE	
X	EXIT SIGN - SEE ELECTRICAL DWGS	
Y	LED WALKOVER FLOOR RECESSED FIXTURE	
Z	SURFACE MOUNTED LED WALL WASHER	
ZI	BIAX COVE LIGHT FIXTURE	
AA	BOLLARD LIGHT FIXTURE	
BB	FLAT DRIVE OVER FLOOR RECESSED FIXTURE	
CC	SURFACE MOUNTED OUTDOOR WALL FIXTURE	
DD	SURFACE MOUNTED DOWNLIGHT FIXTURE	
EE	WALL RECESSED LIGHT FIXTURE	
FF	RECESSED MOUNTED DOWNLIGHT	

MECHANICAL LEGEND

- MECHANICAL REGISTER - SUPPLY
- MECHANICAL REGISTER - RETURN
- MECHANICAL REGISTER - EXHAUST
- MECHANICAL REGISTER - SIDEWALL SUPPLY
- MECHANICAL REGISTER - SIDEWALL RETURN
- MECHANICAL REGISTER - LINEAR CEILING DIFFUSER

AUDIO / VISUAL LEGEND

	MOUNTING BRACKET FOR VIDEO PROJECTOR, SEE DTL	6/AV4.03 SEE AUDIO VISUAL
	RECESSED PROJECTION SCREEN, SEE DTL	5/AV4.03 SEE AUDIO VISUAL & INT ELEVATION
	CEILING MOUNTED SPEAKER	SEE AUDIO VISUAL
	CEILING / WALL-MOUNTED VIDEO CAMERA	SEE AUDIO VISUAL

KEY PLAN

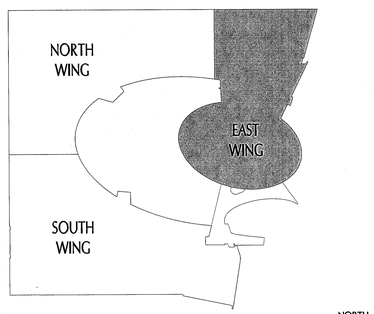

tBP
architecture
planning
interiors
management

LICENSED ARCHITECT
STATE OF CALIFORNIA

tBP/Architecture
5455 Wilshire Boulevard, Suite 1200
Los Angeles, CA 90036-4242
ph: 323. 556. 3788 fx: 323. 556. 3799

architect

consultant

IDENTIFICATION STAMP
DIV. OF THE STATE ARCHITECT
OFFICE OF REGULATION SERVICES
File No. 19-C11
Appl No. 03-112201
AC ____ FLS ____ SS ____
DATE ____

DSA Los Angeles Basin Regional Office
700 North Alameda Street, Suite 5-500
Los Angeles, California 90012
ph: 213/897-3995 fx: 213/897-3159/0726

agency

ANTELOPE VALLEY COLLEGE HEALTH & SCIENCE BUILDING

ANTELOPE VALLEY COMMUNITY COLLEGE DISTRICT
3041 WEST AVENUE K
LANCASTER, CA 93536-5426

owner

tBP project number : 20641.00

file name: A-0206-2RCP.DWG

drawn by: JS, MH checked by: MK

date: JULY 30, 2009 - 100% CD

Rev:	date:	description:
2	2/26/10	ADDENDUM #2

THIS DRAWING AND THE DESIGNS, DEPICTIONS, IDEAS AND OTHER INFORMATION CONTAINED HEREIN CONSTITUTE UNPUBLISHED WORK OF tBP/ARCHITECTURE AND SHALL REMAIN THE PROPERTY OF tBP/ARCHITECTURE IN PERPETUITY. NO PART THEREOF SHALL BE REPRODUCED, DISCLOSED, DISTRIBUTED, SOLD, PUBLISHED OR OTHERWISE USED IN ANY WAY WITHOUT THE ADVANCED EXPRESS WRITTEN CONSENT OF tBP/ARCHITECTURE.

drawing title:
PARTIAL 2ND FLR. RCP
EAST WING

drawing no.:
A-2.06
drawing - of -

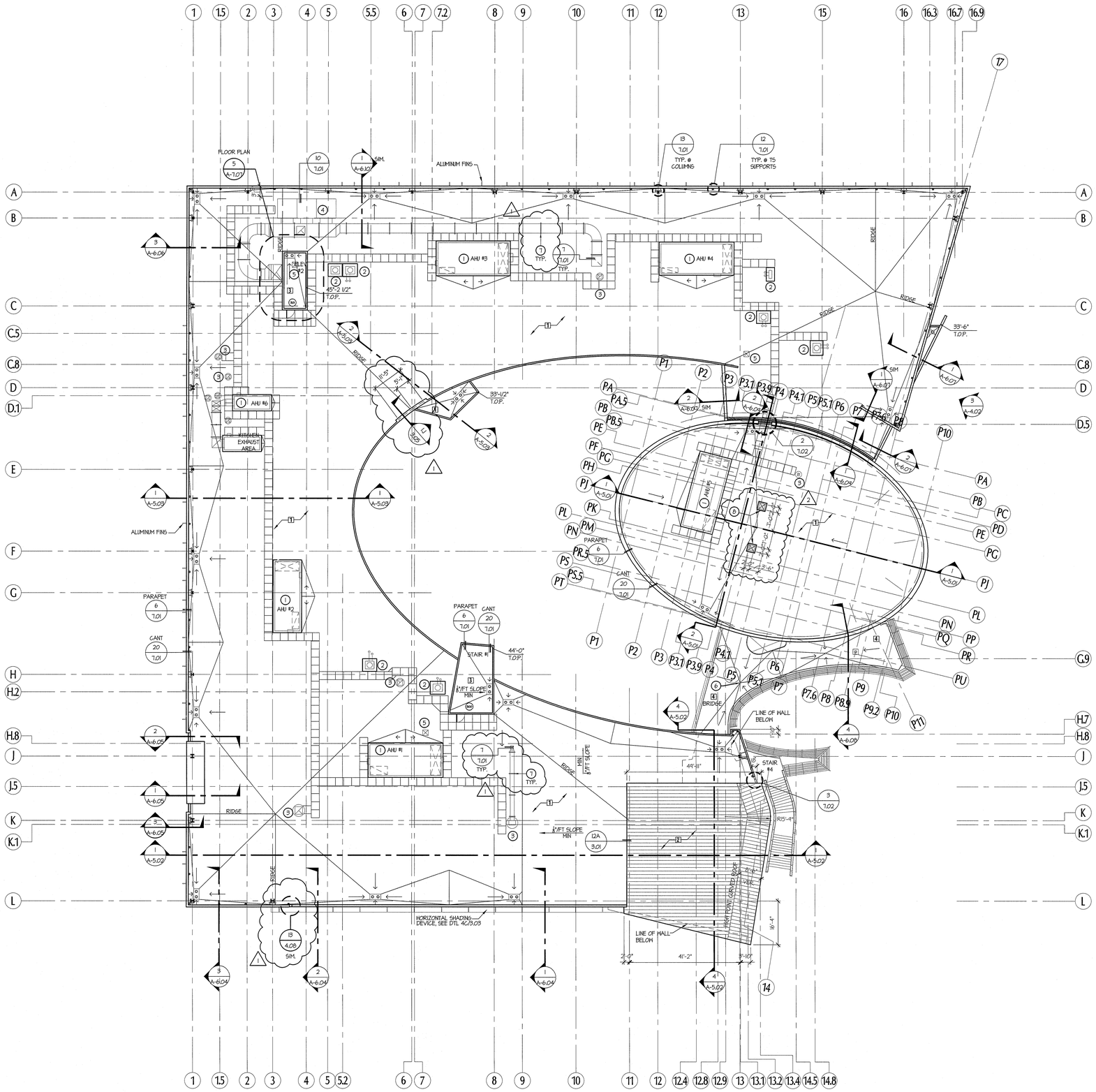

OVERALL ROOF PLAN

SCALE: 1/8" = 1'-0"

0 4' 8' 16' 32'

NORTH

LEGEND & NOTES

R.D.
O.D.P.

1/4" SLOPE

ROOF DRAIN AND OVERFLOW DRAIN (3 / 7.01)

CRICKET (19 / 7.01)

36" X 36" SINGLE PLY ELASTOMERIC WALK PADS ADHERED TO ROOFING MEMBRANE

1. AIR HANDLING UNIT (8 / 7.01)
2. CONDENSING UNIT (- / M6.3)
3. EXHAUST FAN (11 / 7.01)
4. FUME HOODS (10 / 7.01)
5. ELEVATOR VENT
6. AREA DRAIN

7. DUCT SUPPORT. SEE DETAIL FOR EXACT SPACING & LATERAL BRACING REQUIREMENTS (8 / 7.01)
8. ALUMINUM FRAMED GLASS SKYLIGHT ON 4" HIGH CONCRETE CURB (2)

GENERAL ROOF PLAN NOTES

1. ALL EXTERIOR WALLS ARE DIMENSIONED TO THE FACE OF STRUCTURE.
2. ALL CRICKET VALLEYS SHALL SLOPE TO ROOF DRAINS.
3. NO ROOF PENETRATIONS AT VALLEYS

ROOF TYPES

1. SINGLE PLY MEMBRANE PVC ROOFING SYSTEM OVER TAPERED RIGID INSULATION (16 / 7.01)
2. METAL ROOF PANEL SYSTEM OVER THERMAL INSULATION (12 / 3.01)
3. METAL DECK OVER RIGID INSULATION (17 / 7.01)
4. ARCHITECTURAL CONCRETE FINISH O/ WATERPROOFING MEMBRANE O/ CONCRETE O/ METAL DECK (18 / 7.01)

KEY PLAN

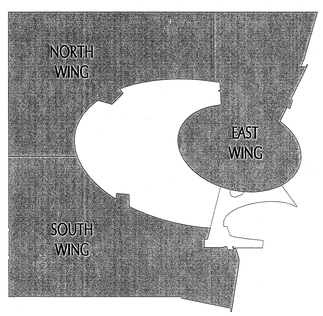

NORTH

tBP
architecture
planning
interiors
management

LICENSED ARCHITECT
STATE OF CALIFORNIA
REG. 5-31-11

tBP/Architecture
5455 Wilshire Boulevard, Suite 1200
Los Angeles, CA 90036-4242
ph: 323. 556. 3788 fx: 323. 556. 3799

architect

consultant

IDENTIFICATION STAMP
DIV. OF THE STATE ARCHITECT
OFFICE OF REGULATION SERVICES
File No. 19-C11
Appl No. 03-112201
AC ____ FLS ____ SS ____
DATE ____

DSA Los Angeles Basin Regional Office
700 North Alameda Street, Suite 5-500
Los Angeles, California 90012
ph: 213/897-3995 fx: 213/897-3159/0726

agency

ANTELOPE VALLEY COLLEGE HEALTH & SCIENCE BUILDING

ANTELOPE VALLEY COMMUNITY COLLEGE DISTRICT
3041 WEST AVENUE K
LANCASTER, CA 93536-5426

owner

tBP project number : 20641.00
file name: A-0301-RP.dwg
drawn by: MH, MT, BDV checked by: JP
date: JULY 30, 2009 - 100% CD

Rev:	date:	description:
1	11/16/09	ADDENDUM #1
2	2/26/10	ADDENDUM #2

THIS DRAWING AND THE DESIGNS, DEPICTIONS, IDEAS AND OTHER INFORMATION CONTAINED HEREIN CONSTITUTE UNPUBLISHED WORK OF tBP/ARCHITECTURE AND SHALL REMAIN THE PROPERTY OF tBP/ARCHITECTURE IN PERPETUITY. NO PART THEREOF SHALL BE REPRODUCED, DISCLOSED, DISTRIBUTED, SOLD, PUBLISHED OR OTHERWISE USED IN ANY WAY WITHOUT THE ADVANCED EXPRESS WRITTEN CONSENT OF tBP/ARCHITECTURE.

drawing title:
OVERALL ROOF PLAN

drawing no.:
A-3.01
drawing of

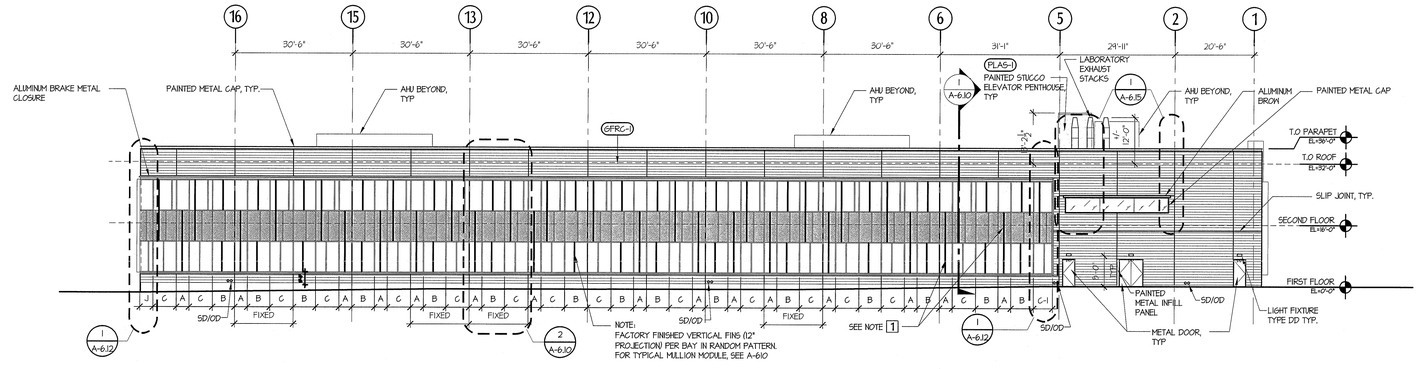

NORTH ELEVATION 1
SCALE: 1/16" = 1'-0"

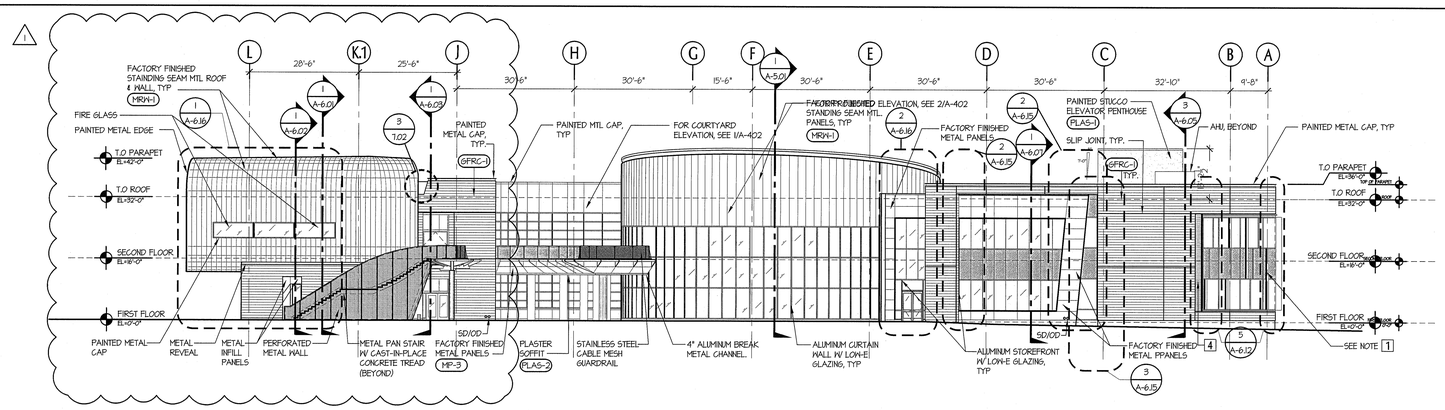

EAST ELEVATION 2
SCALE: 1/16" = 1'-0"

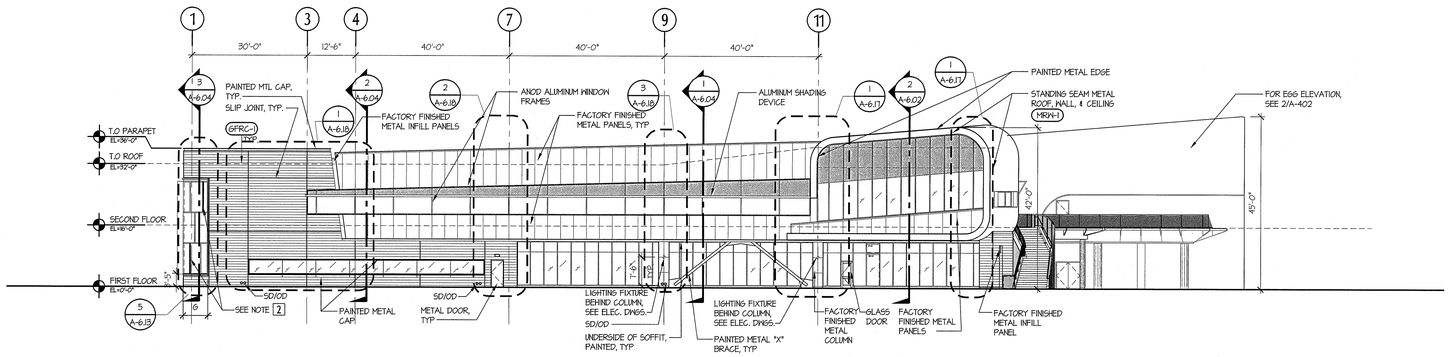

SOUTH ELEVATION 3
SCALE: 1/16" = 1'-0"

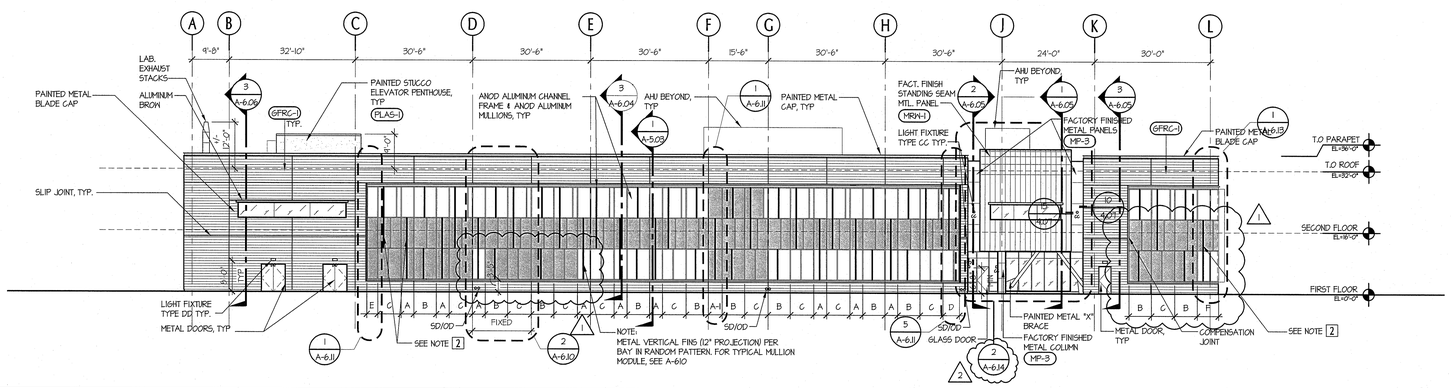

WEST ELEVATION 4
SCALE: 1/16" = 1'-0"

GENERAL NOTES:

1. FOR CURTAIN WALL MODULE DIMENSIONS AND GLASS TYPES, SEE A-6.10, A-6.11, A-6.12, A-6.13

INDICATES SPANDREL GLASS LOCATIONS. SEE A-6.10, A-6.11, A-6.12, A-6.13 FOR SPECIFIC GLASS TYPES

KEY NOTES:

1. PAINTED METAL VERTICAL FINS - SEE ALTERNATE #1, SHEET T-4
2. PAINTED METAL VERTICAL FINS - SEE ALTERNATE #2, SHEET T-4
3. SOLAR SHADING CANOPIES - SEE ALTERNATE #3, SHEET T-4
4. 20" WIDE, FLOOR TO FLOOR, METAL LOUVER, SEE SPECS

tBP
architecture
planning
interiors
management

LICENSED ARCHITECT
NO. C-17677
REN. 4-30-11
STATE OF CALIFORNIA

tBP/Architecture
5455 Wilshire Boulevard, Suite 1200
Los Angeles, CA 90036-4242
ph: 323. 556. 3788 fx: 323. 556. 3799
architect

consultant

IDENTIFICATION STAMP
DIV. OF THE STATE ARCHITECT
OFFICE OF REGULATION SERVICES
File No. 19-C11
Appl No. 03-112201
AC ____ FLS ____ SS ____
DATE ____

DSA Los Angeles Basin Regional Office
700 North Alameda Street, Suite 5-500
Los Angeles, California 90012
ph: 213/897-3995 fx: 213/897-3159/0726
agency

ANTELOPE VALLEY COLLEGE HEALTH & SCIENCE BUILDING

ANTELOPE VALLEY COMMUNITY COLLEGE DISTRICT
3041 WEST AVENUE K
LANCASTER, CA 93536-5426

owner

tBP project number : 20641.00
file name: A-0401-ELEV.DWG
drawn by: JS, MM checked by: MK
date: JULY 30, 2009 - 100% CD

Rev:	date:	description:
1	11/16/09	ADDENDUM #1
2	2/26/10	ADDENDUM #2

THIS DRAWING AND THE DESIGNS, DEPICTIONS, IDEAS AND OTHER INFORMATION CONTAINED HEREIN CONSTITUTE UNPUBLISHED WORK OF tBP/ARCHITECTURE AND SHALL REMAIN THE PROPERTY OF tBP/ARCHITECTURE IN PERPETUITY. NO PART THEREOF SHALL BE REPRODUCED, DISCLOSED, DISTRIBUTED, SOLD, PUBLISHED OR OTHERWISE USED IN ANY WAY WITHOUT THE ADVANCED EXPRESS WRITTEN CONSENT OF tBP/ARCHITECTURE.

drawing title:

EXTERIOR ELEVATIONS

drawing no.:

A-4.01

drawing - of -

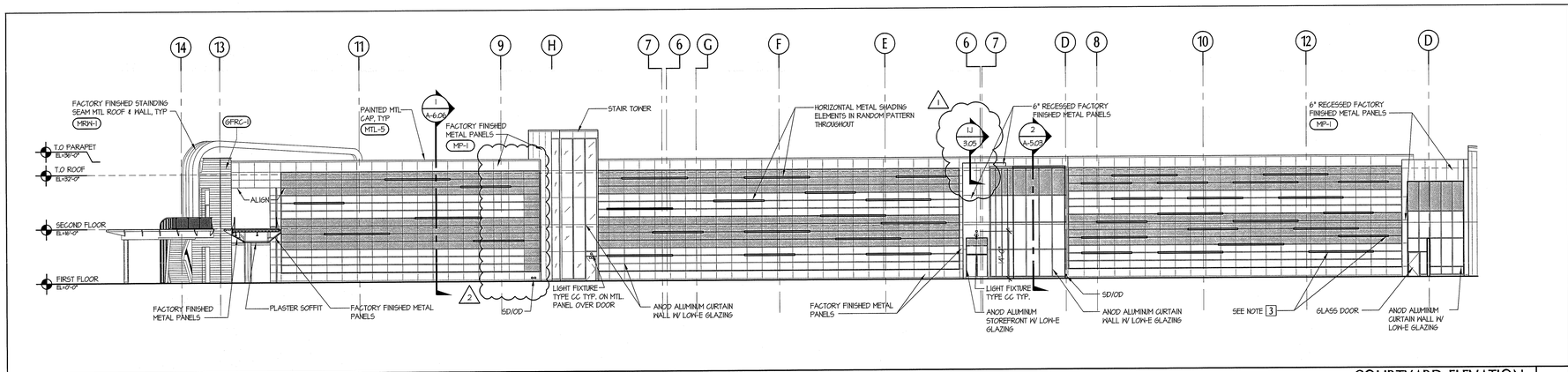

COURTYARD ELEVATION 1

SCALE: 1/16" = 1'-0"

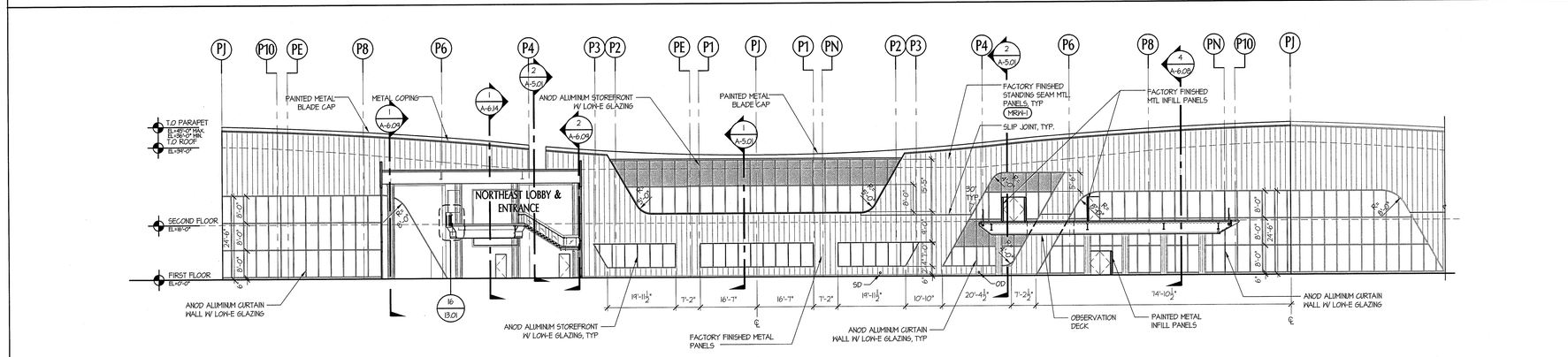

EGG ELEVATION 2

SCALE: 1/16" = 1'-0"

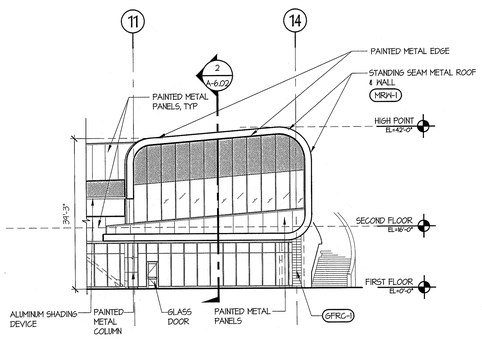

PARTIAL SOUTH ELEVATION 5

SCALE: 1/16" = 1'-0"

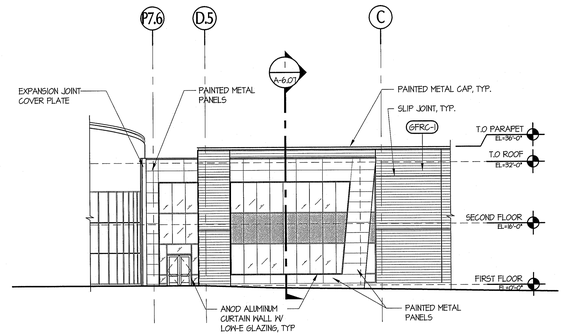

PARTIAL EAST ELEVATION 4

SCALE: 1/16" = 1'-0"

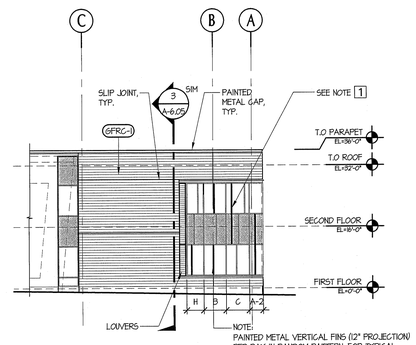

PARTIAL EAST ELEVATION 3

SCALE: 1/16" = 1'-0"

GENERAL NOTES:

1. FOR CURTAIN WALL MODULE DIMENSIONS AND GLASS TYPES, SEE A-610, A-611, A-612, A-613

INDICATES SPANDREL GLASS LOCATIONS, SEE A-610, A-611, A-612, A-613 FOR SPECIFIC GLASS TYPES 1

KEY NOTES:

1. PAINTED METAL VERTICAL FINS - SEE ALTERNATE #1, SHEET T-4
2. PAINTED METAL VERTICAL FINS - SEE ALTERNATE #2, SHEET T-4
3. SOLAR SHADING CANOPIES - SEE ALTERNATE #3, SHEET T-4. SEE DETAIL 3/3.05

tBP
architecture
planning
interiors
management

LICENSED ARCHITECT
STATE OF CALIFORNIA

tBP/Architecture
5455 Wilshire Boulevard, Suite 1200
Los Angeles, CA 90036-4242
ph: 323. 556. 3788 fx: 323. 556. 3799

architect

consultant

IDENTIFICATION STAMP
DIV. OF THE STATE ARCHITECT
OFFICE OF REGULATION SERVICES
file No. 19-C11
Appl No. 03-112201
AC _____ FLS _____ SS _____
DATE _____

DSA Los Angeles Basin Regional Office
700 North Alameda Street, Suite 5-500
Los Angeles, California 90012
ph: 213/897-3995 fx: 213/897-3159/0726

agency

ANTELOPE VALLEY COLLEGE HEALTH & SCIENCE BUILDING

ANTELOPE VALLEY COMMUNITY COLLEGE DISTRICT
3041 WEST AVENUE K
LANCASTER, CA 93536-5426

owner

tBP project number : 20641.00

file name: A-0402-ELEV.DWG

drawn by: JS, MM checked by: MK

date: JULY 30, 2009 - 100% CD

Rev:	date:	description:
1	11/16/09	ADDENDUM #1
2	2/26/10	ADDENDUM #2

THIS DRAWING AND THE DESIGNS, DEPICTIONS, IDEAS AND OTHER INFORMATION CONTAINED HEREIN CONSTITUTE UNPUBLISHED WORK OF tBP/ARCHITECTURE AND SHALL REMAIN THE PROPERTY OF tBP/ARCHITECTURE IN PERPETUITY. NO PART THEREOF SHALL BE REPRODUCED, DISCLOSED, DISTRIBUTED, SOLD, PUBLISHED OR OTHERWISE USED IN ANY WAY WITHOUT THE ADVANCED EXPRESS WRITTEN CONSENT OF tBP/ARCHITECTURE.

drawing title:

EXTERIOR ELEVATIONS

drawing no.:

A-4.02

drawing - of -

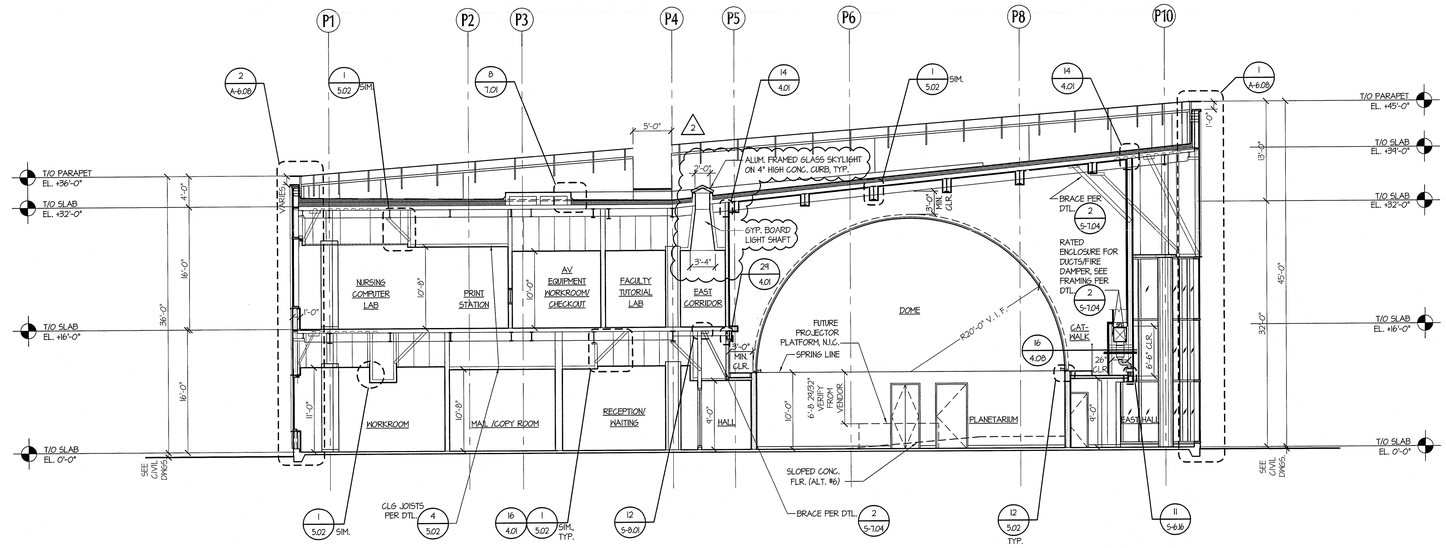

LONGITUDINAL SECTION THRU PLANETARIUM BUILDING

SCALE: 1/8" = 1'-0"

1

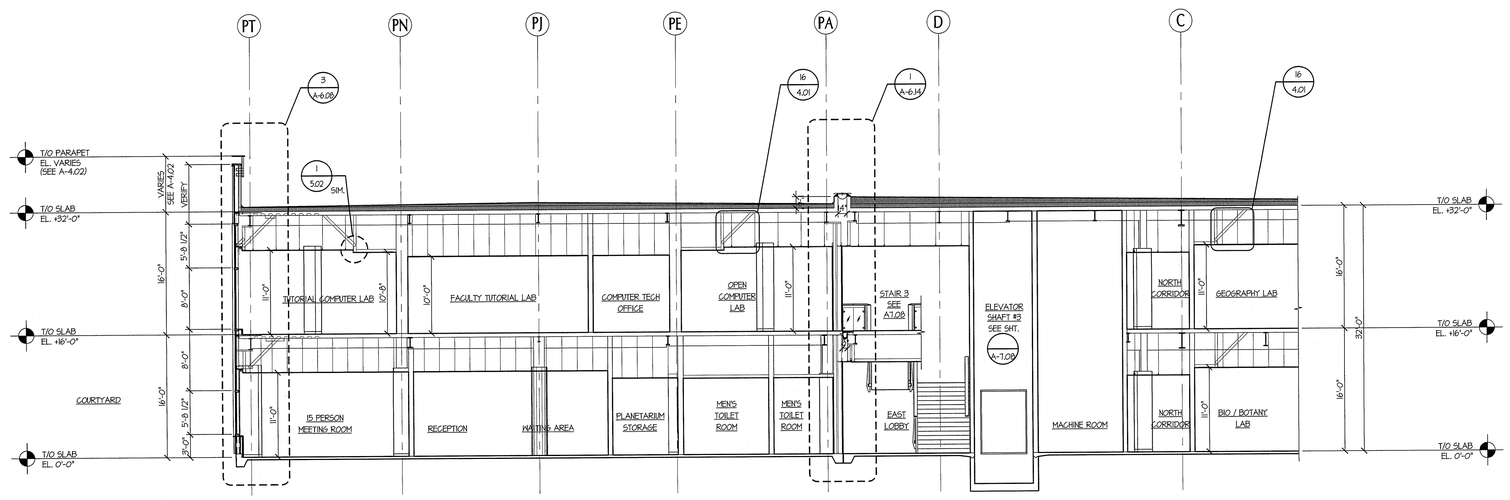

TRANSVERSE SECTION THRU PLANETARIUM BUILDING

SCALE: 1/8" = 1'-0"

2

GENERAL NOTES

1. KEYNOTES ARE STANDARD FOR ALL FLOOR PLANS. NOT ALL NOTES USED ON A PARTICULAR SHEET.
2. CANOPIES / PROJECTIONS SHALL BE SPRINKLERED PER NFPA 13 FOR COMBUSTIBLE PROJECTIONS.
3. ALL BUILDINGS ARE FULLY SPRINKLERED.
4. ALL INTERIOR STUD WALLS TO BE PROVIDED WITH SOUND BATT INSULATION FULL HEIGHT OF GYP. BOARD, TYP.
5. ALL DIMENSIONS SHOWN ARE TO THE CENTER OF STUD, CENTER OF WINDOW/ DOOR, AND/ OR COLUMN GRID UNLESS NOTED OTHERWISE.
6. CONTRACTOR SHALL BE RESPONSIBLE FOR DUST CONTROL.
7. THE DRAWINGS AND SPECIFICATIONS DO NOT INCLUDE NECESSARY COMPONENTS OF CONSTRUCTION SAFETY.
8. WATER-RESISTANT GYPSUM BOARD IS TO BE USED IN ALL WET ROOMS (TOILET ROOMS, JANITOR'S CLOSETS, LAUNDRY ROOMS, KITCHENS, KITCHENETTES, ETC...), DRINKING FOUNTAIN AREAS AND WALLS AT SINKS.

KEY NOTES

LEGEND

REFER TO SHEET T-3 FOR STANDARD REFERENCE SYMBOLS AND WALL TYPES.

FEC — INDICATES RECESSED FIRE EXTINGUISHER CABINET - SEE 2A.108.C RATED EXTINGUISHER (1 / 4.09)

FE — INDICATES BRACKET MOUNTED FIRE EXTINGUISHER - SEE 2A.108.C RATED EXTINGUISHER (23 / 4.01) SIM

tBP
architecture
planning
interiors
management

tBP/Architecture
5455 Wilshire Boulevard, Suite 1200
Los Angeles, CA 90036-4242
ph: 323. 556. 3788 fx: 323. 556. 3799

LICENSED ARCHITECT
JAMES PAN-TAO
No. C-8-11
STATE OF CALIFORNIA

architect

consultant

IDENTIFICATION STAMP
DIV. OF THE STATE ARCHITECT
OFFICE OF REGULATION SERVICES
File No. 19-C11
Appl No. 03-112201
AC _____ RLS _____ SS _____
DATE _____

DSA Los Angeles Basin Regional Office
700 North Alameda Street, Suite 5-500
Los Angeles, California 90012
ph: 213/897-3995 fx: 213/897-3159/0726

agency

owner

ANTELOPE VALLEY COLLEGE HEALTH & SCIENCE BUILDING

ANTELOPE VALLEY COMMUNITY COLLEGE DISTRICT
3041 WEST AVENUE K
LANCASTER, CA 93536-5426

tBP project number : 20641.00

file name: A-0501-BSEC.DWG

drawn by: MT checked by: JP

date: JULY 30, 2009 - 100% CD

Rev:	date:	description:
2	2/26/10	ADDENDUM #2

THIS DRAWING AND THE DESIGNS, DEPICTIONS, IDEAS AND OTHER INFORMATION CONTAINED HEREIN CONSTITUTE UNPUBLISHED WORK OF tBP/ARCHITECTURE AND SHALL REMAIN THE PROPERTY OF tBP/ARCHITECTURE. IN PERPETUITY, NO PART THEREOF SHALL BE REPRODUCED, DISCLOSED, DISTRIBUTED, SOLD, PUBLISHED OR OTHERWISE USED IN ANY WAY WITHOUT THE ADVANCED EXPRESS WRITTEN CONSENT OF tBP/ARCHITECTURE.

drawing title:
BUILDING SECTIONS

drawing no.:
A-5.01

drawing - of -

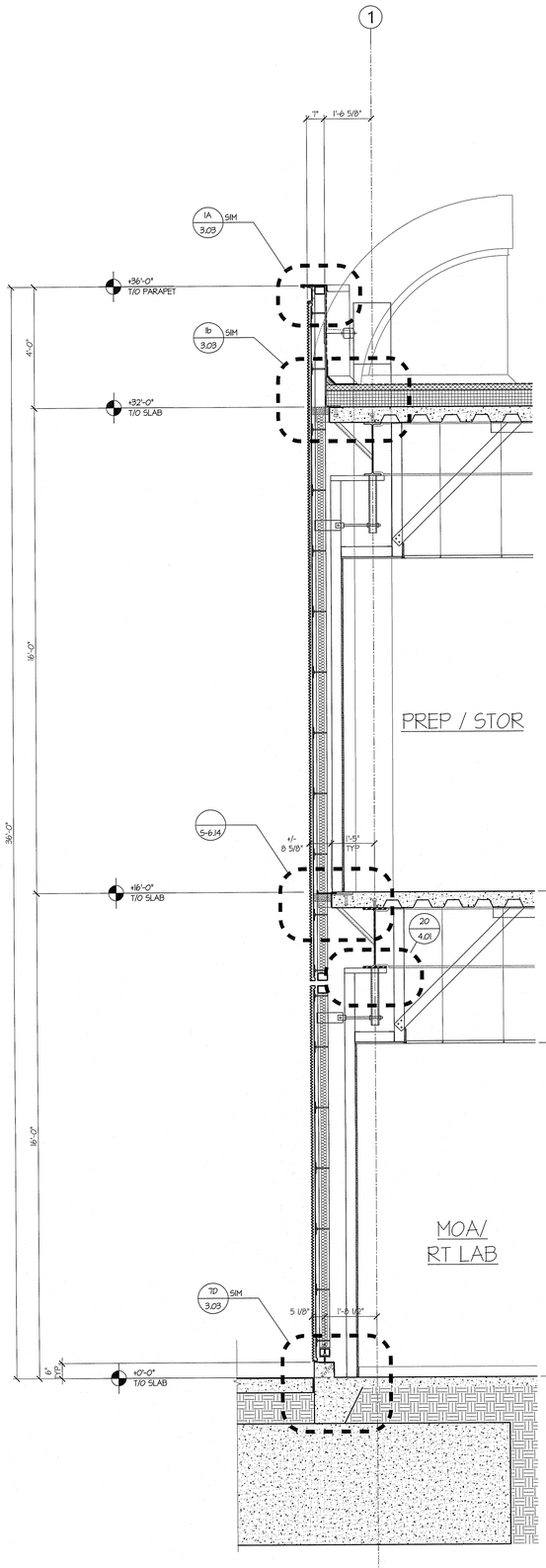

WEST WALL SECTION BTWN B & C 3

SCALE: 1/2" = 1'-0"

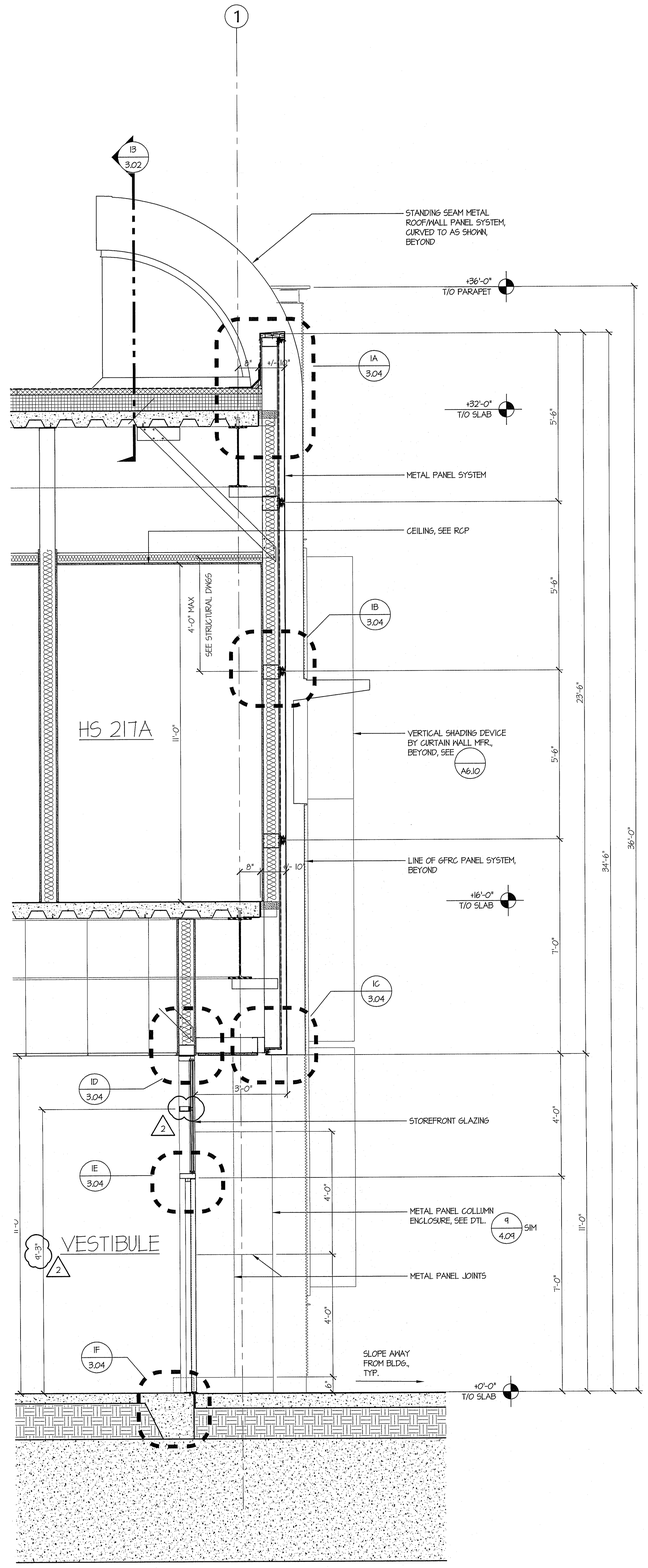

WEST WALL SECTION NEAR H.8 2

SCALE: 1/2" = 1'-0"

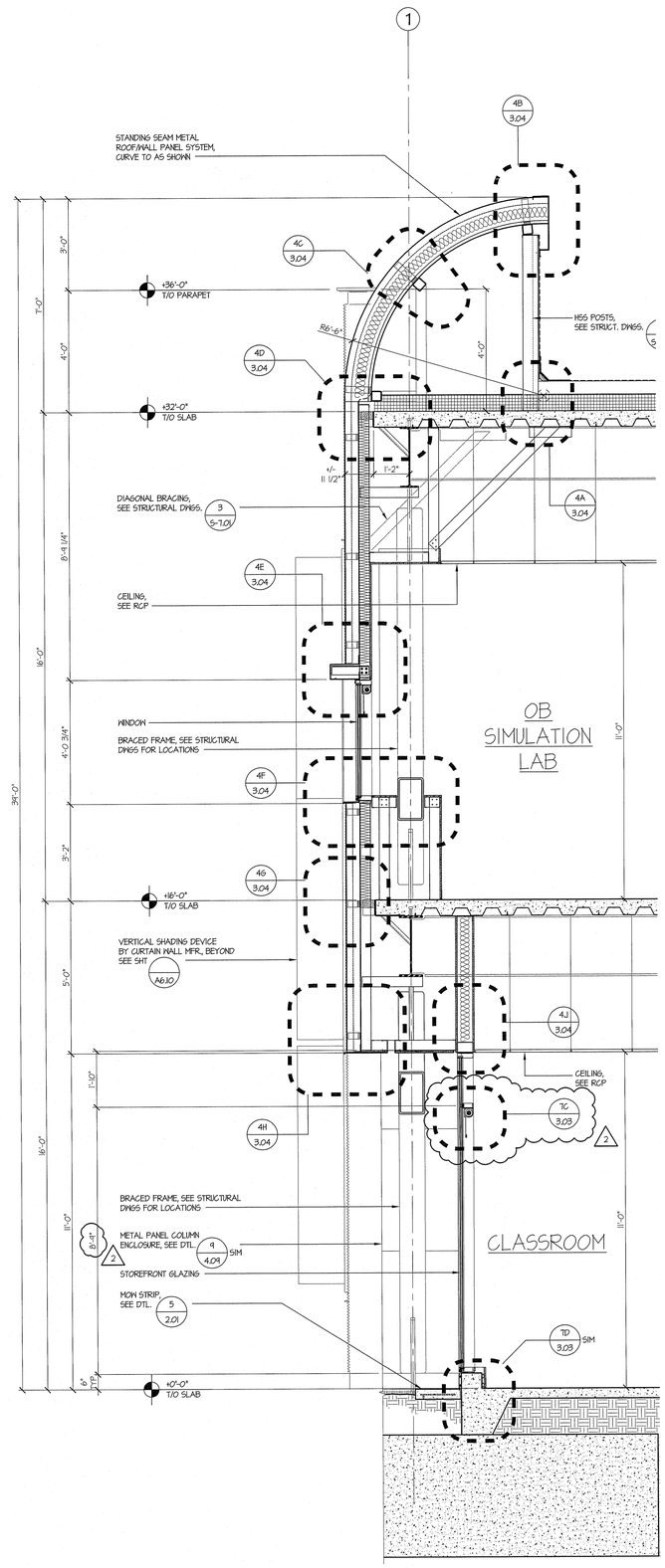

WEST WALL SECTION BTWN J.5 & K 1

SCALE: 1/2" = 1'-0"

tBP
architecture
planning
interiors
management

tBP/Architecture
5455 Wilshire Boulevard, Suite 1200
Los Angeles, CA 90036-4242
ph: 323. 556. 3788 fx: 323. 556. 3799

LICENSED ARCHITECT
STATE OF CALIFORNIA

architect

consultant

IDENTIFICATION STAMP
DIV. OF THE STATE ARCHITECT
OFFICE OF REGULATION SERVICES
File No. 19-C11
Appl No. 03-112201
AC ____ RLS ____ SS ____
DATE ____

DSA Los Angeles Basin Regional Office
700 North Alameda Street, Suite 5-500
Los Angeles, California 90012
ph: 213/897-3995 fx: 213/897-3159/0726

agency

owner

ANTELOPE VALLEY COLLEGE HEALTH & SCIENCE BUILDING

ANTELOPE VALLEY COMMUNITY COLLEGE DISTRICT
3041 WEST AVENUE K
LANCASTER, CA 93536-5426

tBP project number : 206410.00
file name: A-0605-MSEC.DWG
drawn by: GL, JS, MT checked by: JP
date: JULY 30, 2009 - 100% CD

Rev:	date:	description:
2	2/26/10	ADDENDUM #2

THIS DRAWING AND THE DESIGNS, DEPICTIONS, IDEAS AND OTHER INFORMATION CONTAINED HEREIN CONSTITUTE UNPUBLISHED WORK OF tBP/ARCHITECTURE AND SHALL REMAIN THE PROPERTY OF tBP/ARCHITECTURE IN PERPETUITY. NO PART THEREOF SHALL BE REPRODUCED, DISCLOSED, DISTRIBUTED, SOLD, PUBLISHED OR OTHERWISE USED IN ANY WAY WITHOUT THE ADVANCED EXPRESS WRITTEN CONSENT OF tBP/ARCHITECTURE.

drawing title:
EXTERIOR WALL SECTIONS

drawing no.:
A-6.05

drawing - of -

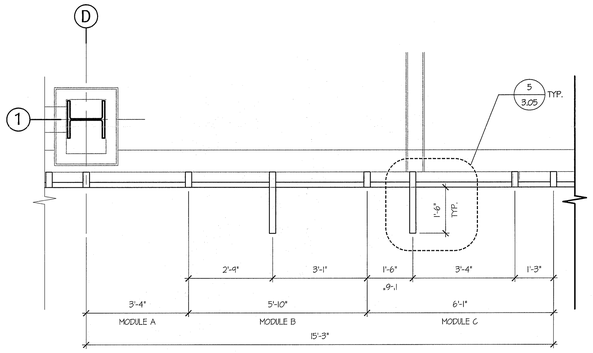

CURTAIN WALL PLAN, 2ND FLOOR VISION GLASS | 3

SCALE: 1/2" = 1'-0"

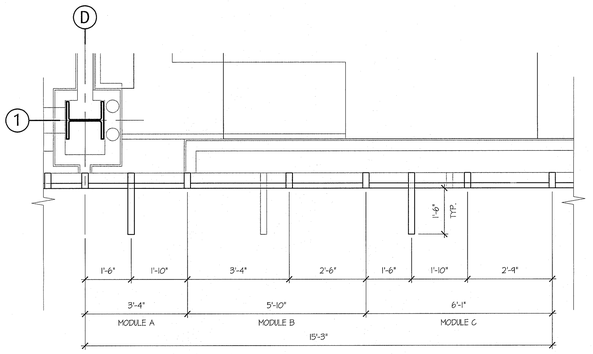

CURTAIN WALL PLAN, SPANDREL GLASS | 4

SCALE: 1/2" = 1'-0"

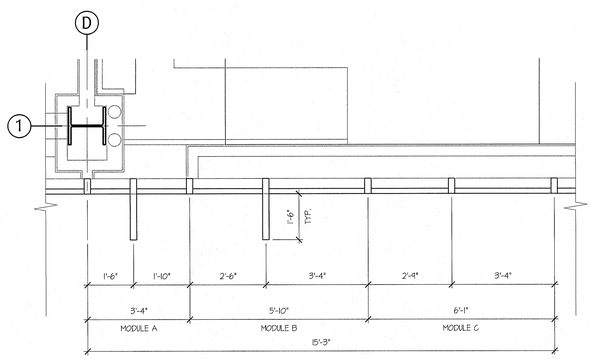

CURTAIN WALL PLAN, 1ST FLOOR VISION GLASS | 5

SCALE: 1/2" = 1'-0"

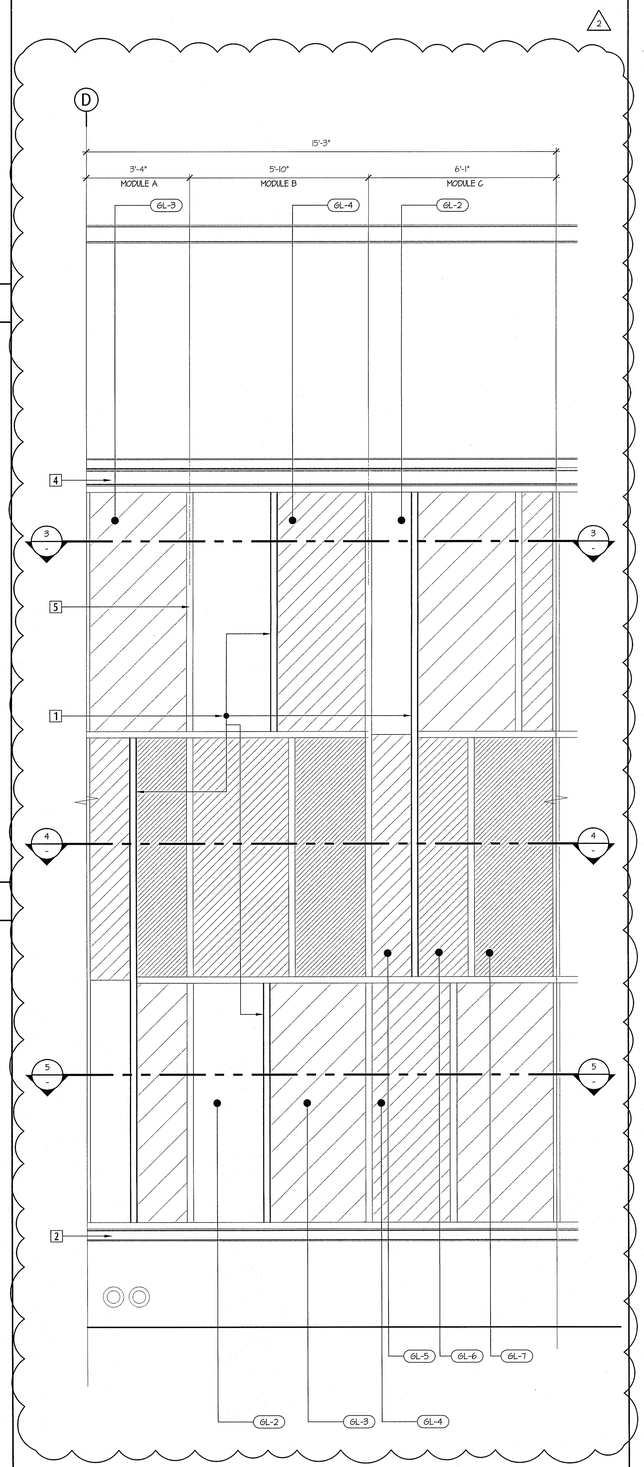

TYPICAL CURTAIN WALL BAY ELEVATION | 2

SCALE: 1/2" = 1'-0"

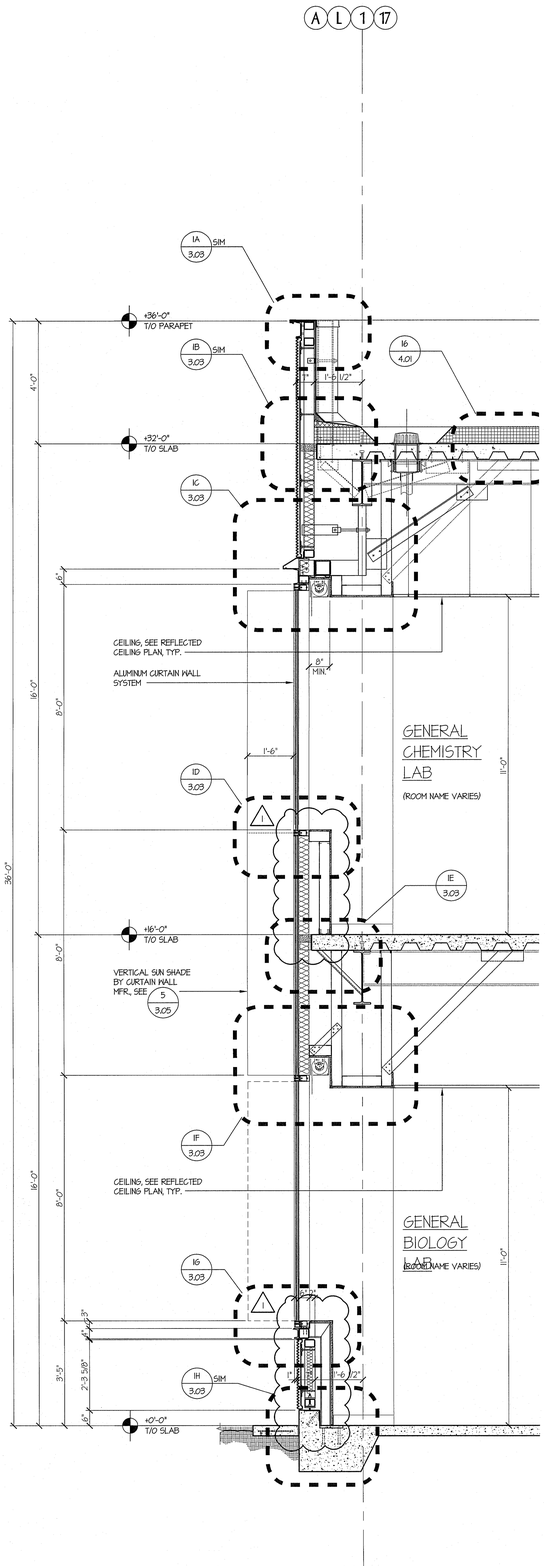

WEST WALL SECTION BETWEEN E & F | 1

SCALE: 1/2" = 1'-0"

LEGEND

GL-2	SUNGUARD - VISION LOW-E 1" INSULATED GLASS UNIT
GL-3	SUNGUARD - VISION / LOW-E 1" INSULATED 30% FRIT GLASS UNIT
GL-4	SUNGUARD - VISION / LOW-E 1" INSULATED 60% FRIT GLASS UNIT
GL-5	SUNGUARD - SPANDREL 1" INSULATED GLASS UNIT
GL-6	SUNGUARD - SPANDREL 1" INSULATED 30% FRIT GLASS UNIT
GL-7	SUNGUARD - SPANDREL 1" INSULATED 60% FRIT GLASS UNIT

GENERAL NOTES:

A. 15'-3" MODULE DIMENSION IS INCREASED TO 15'-6" BTWN GRIDS "5" & "F". SEE 5/A-6.11

B. EACH 15'-3" MODULE WILL BE AN ALTERNATE COMBINATION OF MODULES A, B, C. FOR EXAMPLE: (A, B, C); (A, C, B); (B, C, A); (B, A, C); (C, A, B); (C, B, A). SEE ELEVATIONS.

KEY NOTES:

1. PAINTED METAL VERTICAL FINS - SEE DETAIL 5/3.05, AND ALTERNATE #1, SHEET T-4
2. 4" STEEL CHANNEL
3. NOT USED
4. 6" STEEL CHANNEL
5. ALUMINUM CURTAIN WALL, TYP.

tBP
architecture
planning
interiors
management

LICENSED ARCHITECT
C-34432
REN. 12-31-11
STATE OF CALIFORNIA

tBP/Architecture
5455 Wilshire Boulevard, Suite 1200
Los Angeles, CA 90036-4242
ph: 323. 556. 3788 fx: 323. 556. 3799

architect

consultant

IDENTIFICATION STAMP
DIV. OF THE STATE ARCHITECT
OFFICE OF REGULATION SERVICES
File No. 19-C11
Appl No. 03-112201
AC ____ RLS ____ SS ____
DATE ____

DSA Los Angeles Basin Regional Office
700 North Alameda Street, Suite 5-500
Los Angeles, California 90012
ph: 213/897-3995 fx: 213/897-3159/0726

agency

owner

ANTELOPE VALLEY COLLEGE HEALTH & SCIENCE BUILDING

ANTELOPE VALLEY COMMUNITY COLLEGE DISTRICT
3041 WEST AVENUE K
LANCASTER, CA 93536-5426

tBP project number : 20641.00

file name: A-0610-CURTWALL.DWG

drawn by: GL, MM, MT checked by: JP

date: JULY 30, 2009 - 100% CD

Rev:	date:	description:
1	11/16/09	ADDENDUM #1
2	2/26/10	ADDENDUM #2

THIS DRAWING AND THE DESIGNS, DEPICTIONS, IDEAS AND OTHER INFORMATION CONTAINED HEREIN CONSTITUTE UNPUBLISHED WORK OF tBP/ARCHITECTURE AND SHALL REMAIN THE PROPERTY OF tBP/ARCHITECTURE IN PERPETUITY. NO PART THEREOF SHALL BE REPRODUCED, DISCLOSED, DISTRIBUTED, SOLD, PUBLISHED OR OTHERWISE USED IN ANY WAY WITHOUT THE ADVANCED EXPRESS WRITTEN CONSENT OF tBP/ARCHITECTURE.

drawing title:

TYPICAL CURTAIN WALL PLANS, SECTION & ELEV.

drawing no.:

A-6.10

drawing - of -

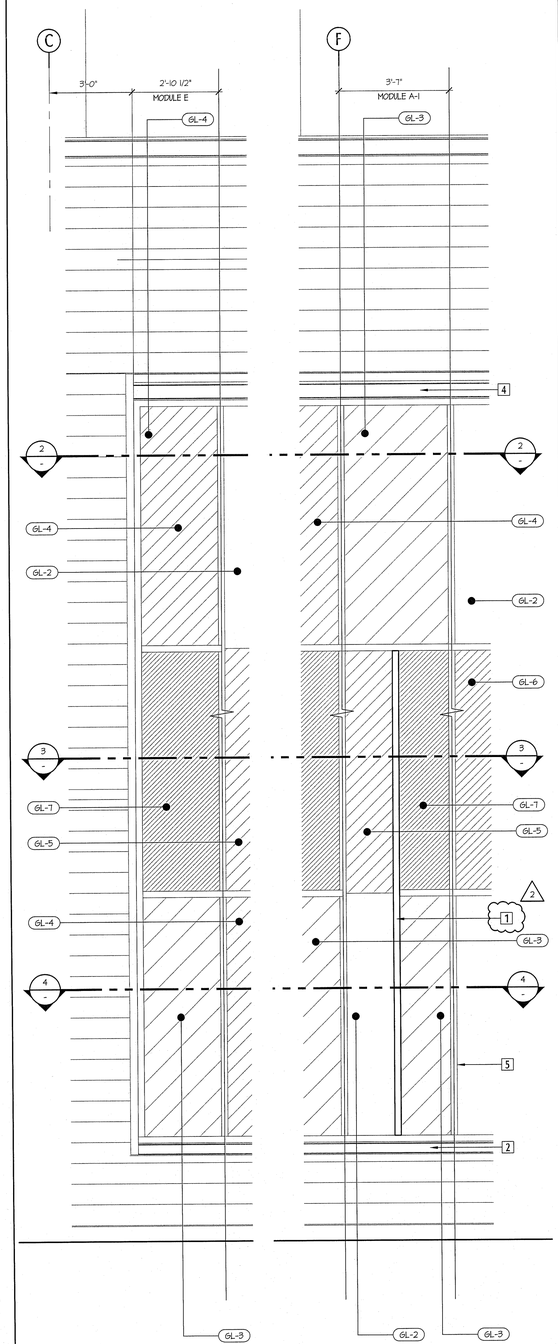

WEST CURTAIN WALL BAY ELEVATION: MODULES (E) & (A-1)
SCALE: 1/2" = 1'-0" | 1

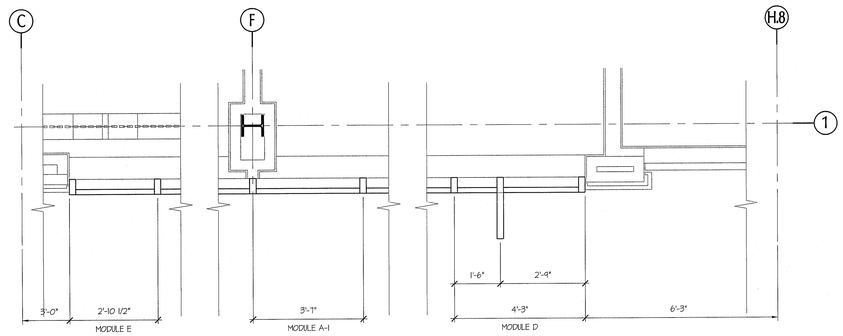

CURTAIN WALL PLAN, 2ND FLOOR VISION GLASS
SCALE: 1/2" = 1'-0" | 2

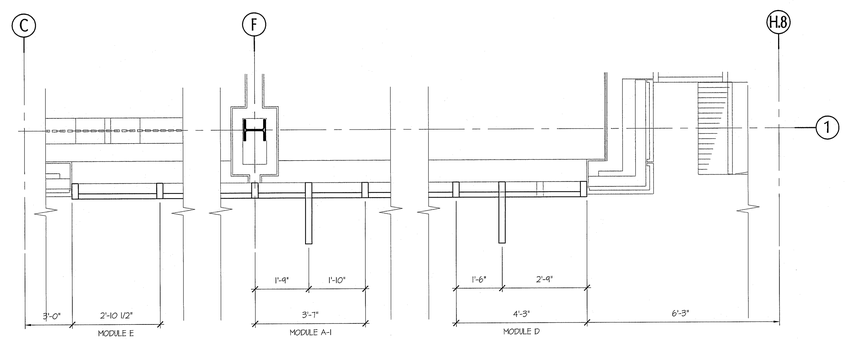

CURTAIN WALL PLAN, SPANDREL GLASS
SCALE: 1/2" = 1'-0" | 3

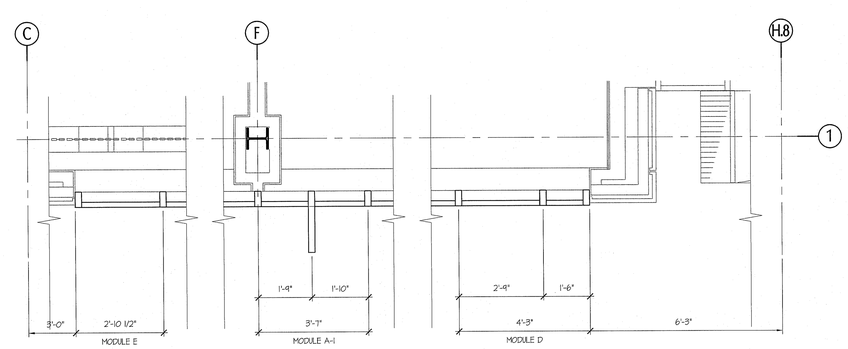

CURTAIN WALL PLAN, 1ST FLOOR VISION GLASS
SCALE: 1/2" = 1'-0" | 4

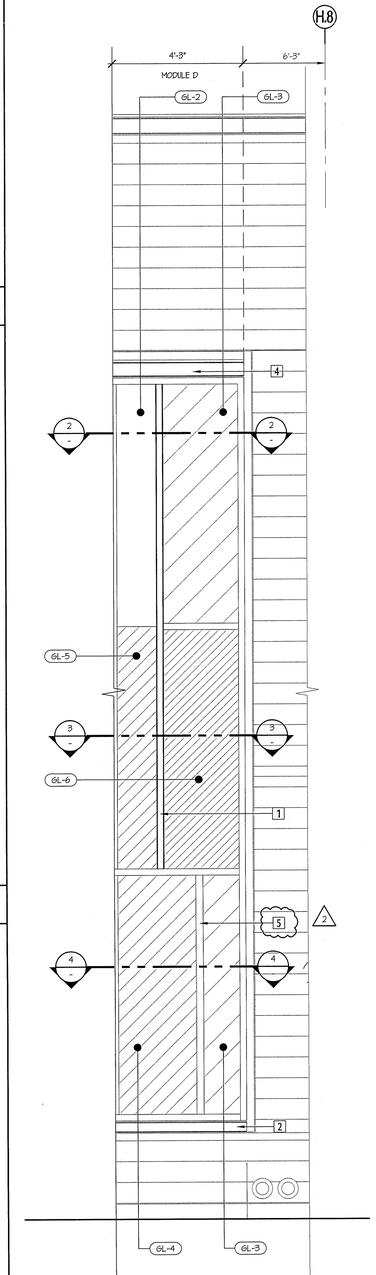

WEST CURT WALL BAY ELEV: MODULE (D)
SCALE: 1/2" = 1'-0" | 5

LEGEND

GL-2	SUNGUARD - VISION LOW-E 1" INSULATED GLASS UNIT
GL-3	SUNGUARD - VISION / LOW-E 1" INSULATED 30% FRIT GLASS UNIT
GL-4	SUNGUARD - VISION / LOW-E 1" INSULATED 60% FRIT GLASS UNIT
GL-5	SUNGUARD - SPANDREL 1" INSULATED GLASS UNIT
GL-6	SUNGUARD - SPANDREL 1" INSULATED 30% FRIT GLASS UNIT
GL-7	SUNGUARD - SPANDREL 1" INSULATED 60% FRIT GLASS UNIT

GENERAL NOTES:

A. 15'-3" MODULE DIMENSION IS INCREASED TO 15'-6" BTWN GRIDS "G" & "F". SEE 5/A-6.11

B. EACH 15'-3" MODULE WILL BE AN ALTERNATE COMBINATION OF MODULES A, B, C.
FOR EXAMPLE: (A, B, C); (A, C, B); (B, C, A); (B, A, C); (C, A, B); (C, B, A). SEE ELEAVTIONS.

KEY NOTES:

1. PAINTED METAL VERTICAL FINS - SEE DETAIL 5/3.05, AND ALTERNATE #1, SHEET T-4
2. 4" STEEL CHANNEL
3. NOT USED
4. 6" STEEL CHANNEL
5. ALUMINUM CURTAIN WALL, TYP.

tBP
architecture
planning
interiors
management

LICENSED ARCHITECT
STATE OF CALIFORNIA

tBP/Architecture
5455 Wilshire Boulevard, Suite 1200
Los Angeles, CA 90036-4242
ph: 323. 556. 3788 fx: 323. 556. 3799
architect

consultant

IDENTIFICATION STAMP
DIV. OF THE STATE ARCHITECT
OFFICE OF REGULATION SERVICES
File No. 19-C11
Appl No. 03-112201
AC _____ FLS _____ SS _____
DATE _____

DSA Los Angeles Basin Regional Office
700 North Alameda Street, Suite 5-500
Los Angeles, California 90012
ph: 213/897-3995 fx: 213/897-3159/0726
agency

ANTELOPE VALLEY COLLEGE
HEALTH & SCIENCE BUILDING
ANTELOPE VALLEY COMMUNITY COLLEGE DISTRICT
3041 WEST AVENUE K
LANCASTER, CA 93536-5426
owner

tBP project number : 206411.00
file name: A-06II-CURTWALL.DWG
drawn by: GL, MM, MT checked by: JP
date: JULY 30, 2009 - 100% CD

Rev:	date:	description:
2	2/26/10	ADDENDUM #2

THIS DRAWING AND THE DESIGNS, DEPICTIONS, IDEAS AND OTHER INFORMATION CONTAINED HEREIN CONSTITUTE UNPUBLISHED WORK OF tBP/ARCHITECTURE AND SHALL REMAIN THE PROPERTY OF tBP/ARCHITECTURE IN PERPETUITY. NO PART THEREOF SHALL BE REPRODUCED, DISCLOSED, DISTRIBUTED, SOLD, PUBLISHED OR OTHERWISE USED IN ANY WAY WITHOUT THE ADVANCED EXPRESS WRITTEN CONSENT OF tBP/ARCHITECTURE.

drawing title:
WEST CURTAIN WALL
MODULES: E, A-1 & D

drawing no.:
A-6.11
drawing - of -

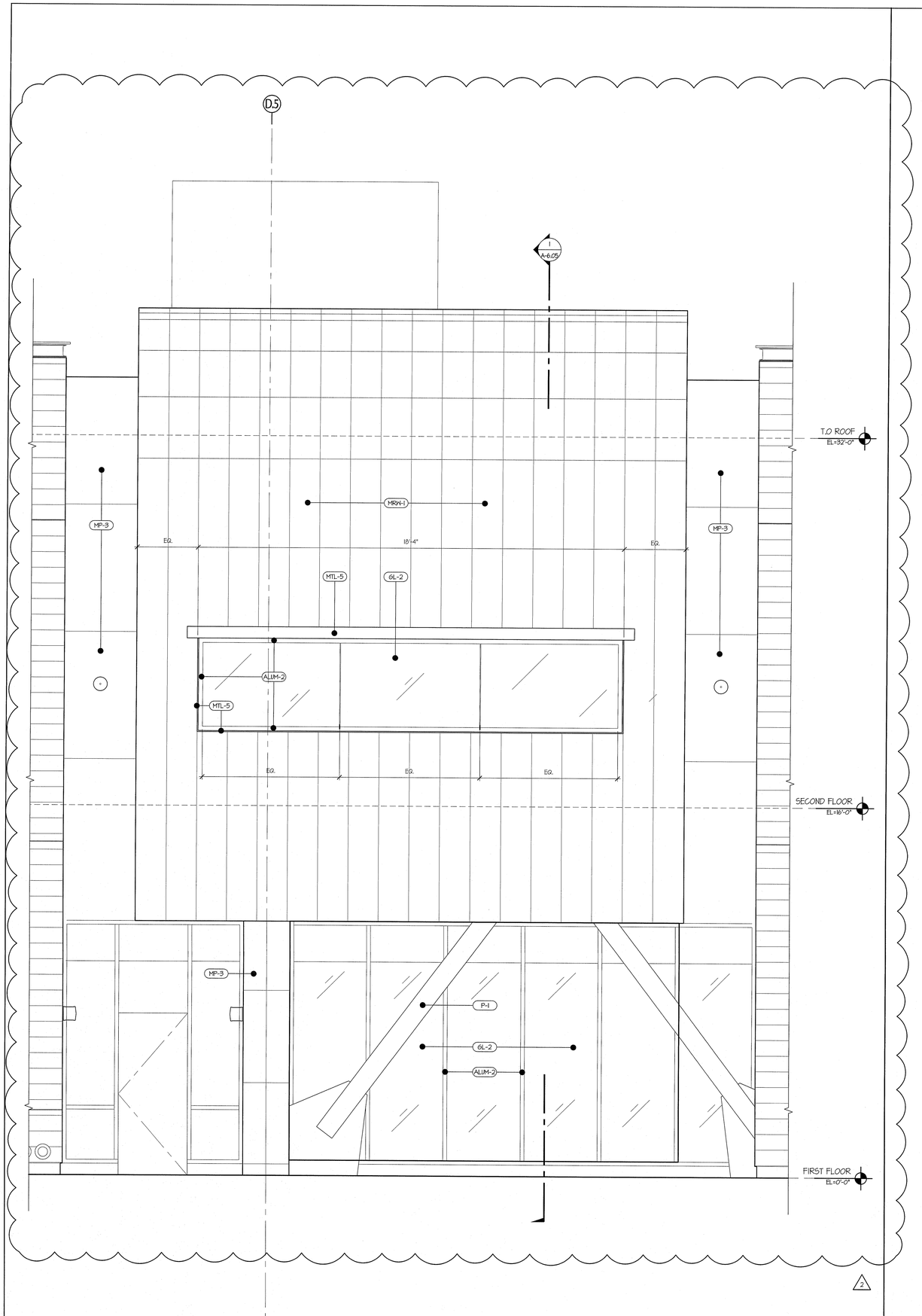

DETAIL WEST ELEVATION & PLAN
SCALE: 1/2" = 1'-0"
2

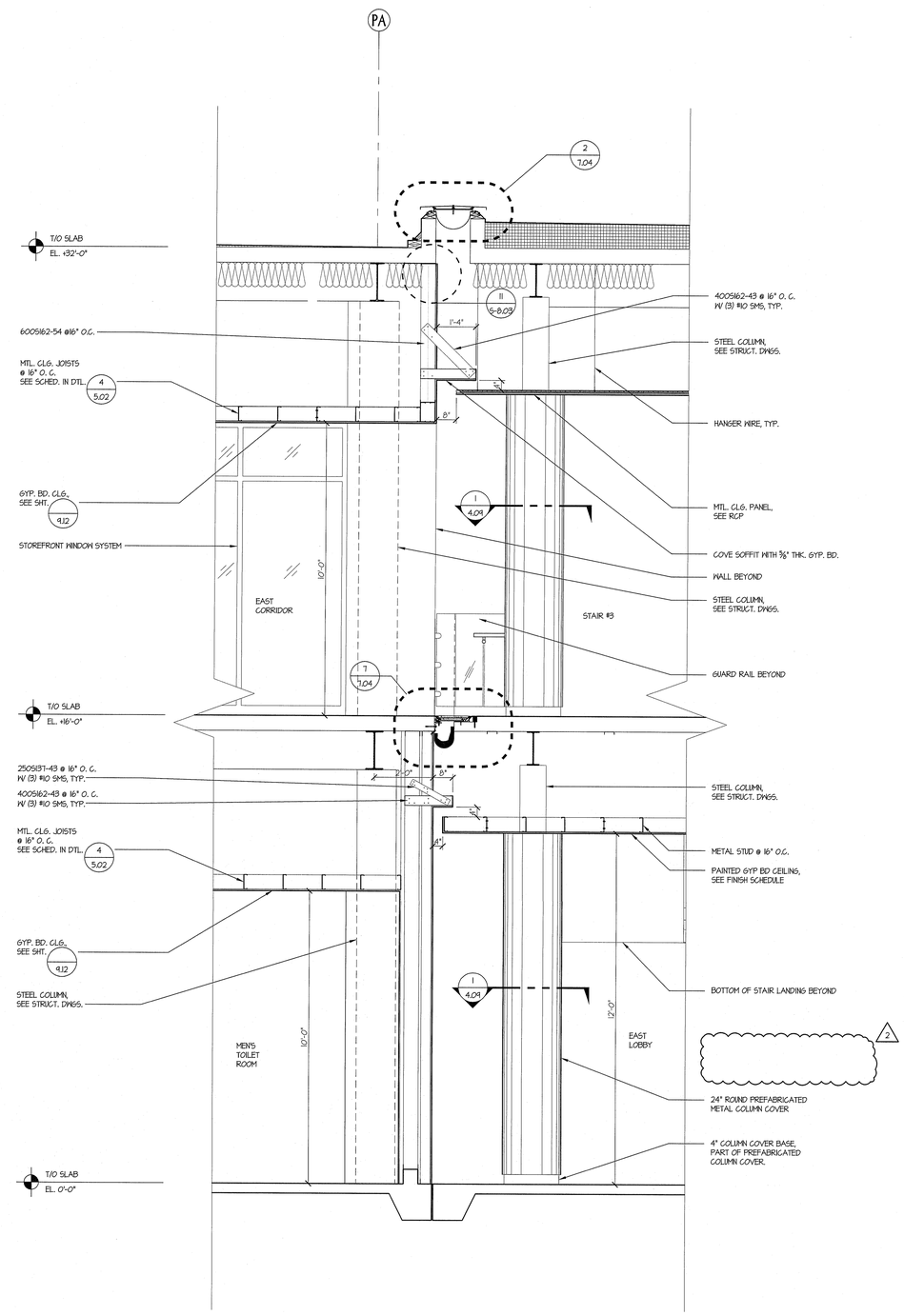

WALL SECTION THRU EGG, STAIR #3 & NORTH-EAST LOBBY
SCALE: 1/2" = 1'-0"
1

tBP
architecture
planning
interiors
management

tBP/Architecture
5455 Wilshire Boulevard, Suite 1200
Los Angeles, CA 90036-4242
ph: 323. 556. 3788 fx: 323. 556. 3799

LICENSED ARCHITECT
STATE OF CALIFORNIA

architect

consultant

IDENTIFICATION STAMP
DIV. OF THE STATE ARCHITECT
OFFICE OF REGULATION SERVICES
File No. 19-C11
Appl No. 03-112201
AC ____ RS ____ SS ____
DATE ____

DSA Los Angeles Basin Regional Office
700 North Alameda Street, Suite 5-500
Los Angeles, California 90012
ph: 213/897-3995 fx: 213/897-3159/0726

agency

ANTELOPE VALLEY COLLEGE HEALTH & SCIENCE BUILDING

ANTELOPE VALLEY COMMUNITY COLLEGE DISTRICT
3041 WEST AVENUE K
LANCASTER, CA 93536-5426

owner

tBP project number : 20641.00
file name: A-0614-WSEC-INT.DWG
drawn by: JT, MT checked by: JP
date: JULY 30, 2009 - 100% CD

Rev:	date:	description:
2	2/26/10	ADDENDUM #2

THIS DRAWING AND THE DESIGNS, DEPICTIONS, IDEAS AND OTHER INFORMATION CONTAINED HEREIN CONSTITUTE UNPUBLISHED WORK OF tBP/ARCHITECTURE AND SHALL REMAIN THE PROPERTY OF tBP/ARCHITECTURE IN PERPETUITY; NO PART THEREOF SHALL BE REPRODUCED, DISCLOSED, DISTRIBUTED, SOLD, PUBLISHED OR OTHERWISE USED IN ANY WAY WITHOUT THE ADVANCED EXPRESS WRITTEN CONSENT OF tBP/ARCHITECTURE.

drawing title: 2
INT. WALL SECTIONS
WEST ELEV. BLOW-UP

drawing no.:
A-6.14
drawing - of -

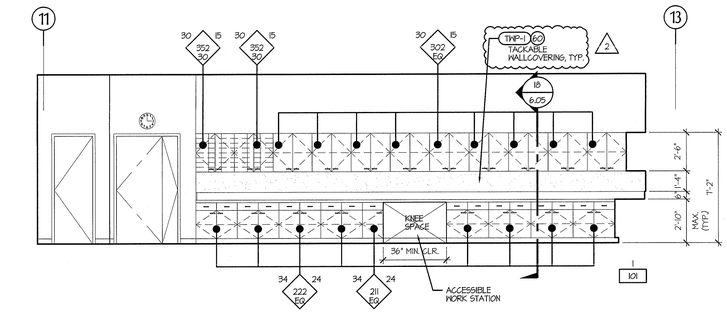

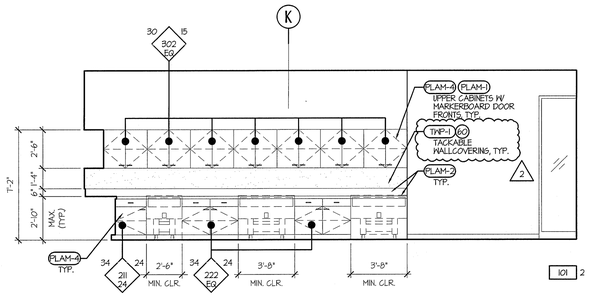

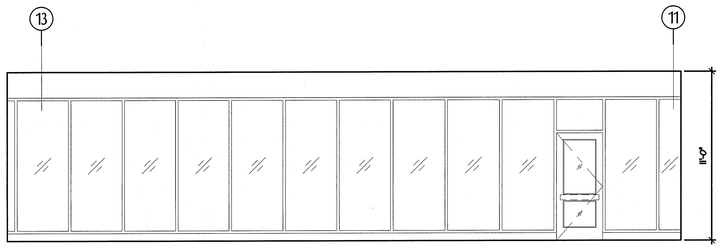

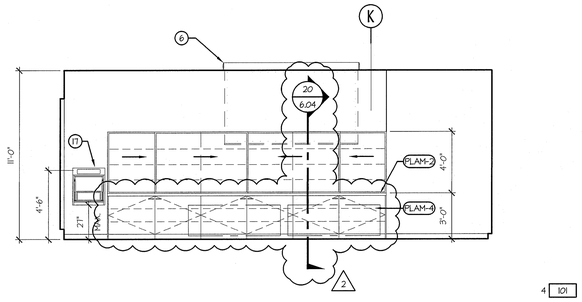

EMERGENCY MEDICAL TECHNICIAN (EMT) LAB INTERIOR ELEVATION

SCALE: 1/4" = 1'-0"

HS 101

NOTE:
REFER TO ENLARGED FLOOR PLANS FOR DIMENSIONS

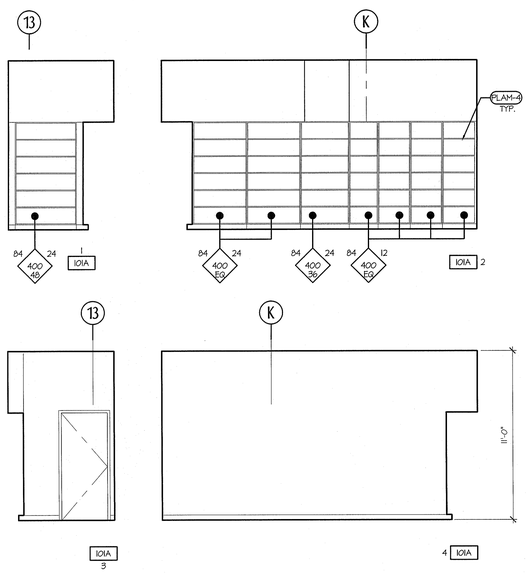

EMT STORAGE INTERIOR ELEVATION

SCALE: 1/4" = 1'-0"

HS 101A

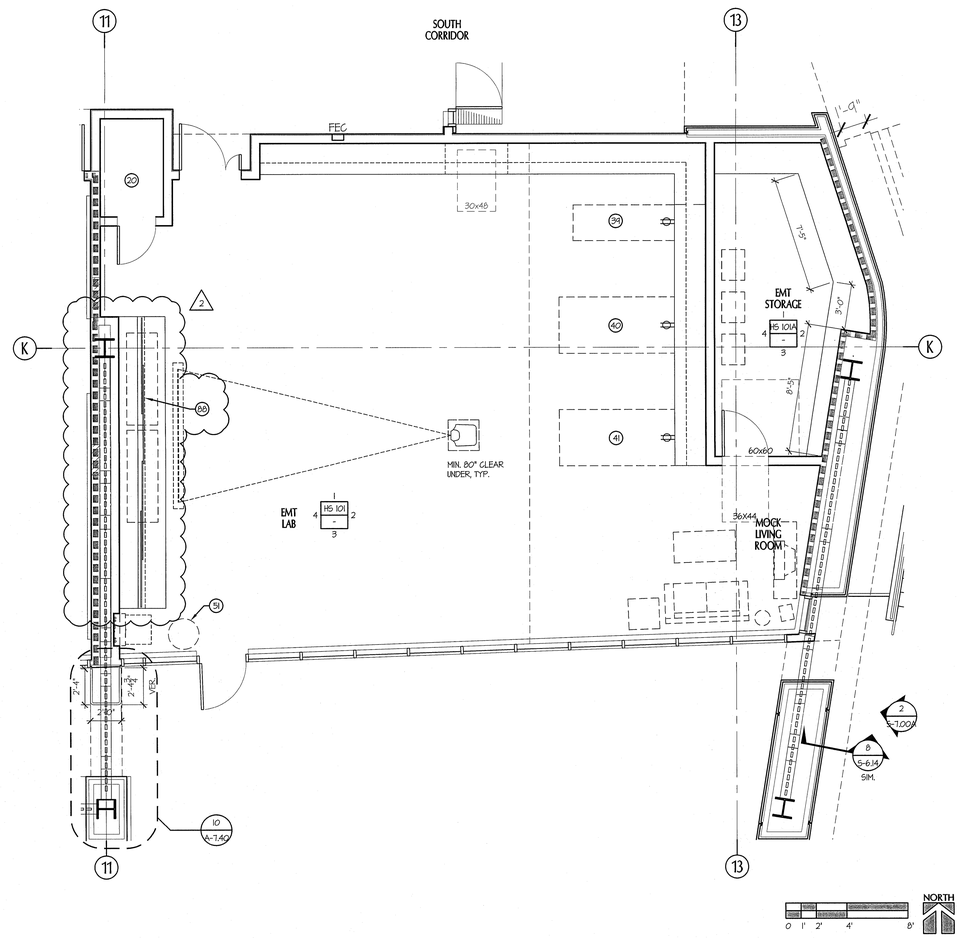

ENLARGED EMERGENCY MEDICAL TECHNICIAN (EMT) LAB PLAN

SCALE: 1/4" = 1'-0"

1

GENERAL NOTES

1. KEYNOTES ARE STANDARD FOR ALL INTERIOR ELEVATION AND ENLARGED PLAN DRAWINGS. NOT ALL NOTES USED ON A PARTICULAR SHEET.
2. PROVIDE ADJUSTABLE SHELVES AND LOCKS IN ALL CABINETRY.
3. ALL FIXTURES AND ACCESSORIES ARE ACCESSIBLE UNLESS OTHERWISE NOTED.
4. PROVIDE EQUAL TOLERANCE AT EACH END OF UPPER & LOWER CABINET RUNS.
5. ALL FIRE ALARM DEVICES & THERMOSTATS TO BE INSTALLED CLEAR OF MARKERBOARD AND TACKBOARDS, TYP.
6. COORDINATE INSTALLATION OF ALL ACOUSTICAL PANELS TO SCRIBE AROUND ALL MARKERBOARDS & TACKBOARDS, TYP.

GENERAL KEYNOTES

1. HAND SINK, REGULAR
2. MARKER BD (TOP OF TRAY MAX 34" AFF). PROVIDE BACKING PLATES PER 13/6.05.
3. ACCESSIBLE COMPUTER STATIONS, NIC
4. NOT USED
5. ADJUSTABLE SHELVES
6. RECESSED MOTORIZED PROJECTION SCREEN, SEE AV/DIO VISUAL
7. PLAM COUNTERTOP
8. PLAM COUNTERTOP AND BACKSPLASH
9. PLAM UPPER CABINET
10. PLAM COUNTER W/ MANIKIN STORAGE BELOW
11. PLAM COUNTER / CHECK-IN STATION
12. PLAM FULL HEIGHT CABINET
13. PLAM ACCESSIBLE CABINET DOORS WITH KICK
14. PLAM UPPER CABINET(S) W/ WHITEBOARD FACE
15. PLAM UPPER CABINET(S) WITH MAIL BOXES
16. NOT USED
17. WALL MOUNT MEDIA BOX - SEE AV/DIO VISUAL DWGS. MAX 4" PROJECTION OR MAX. 27" AFF TO BOTTOM, NIC
18. NOT USED
19. NOT USED
20. EQUIPMENT CLOSET
21. NOT USED
22. RUBBER BASE
23. NOT USED
24. NOT USED
25. HOSPITAL BED WITH OVERBED TRAY TABLE, NIC
26. BEDSIDE TABLE/ NIGHT STAND, NIC
27. (E) RELOCATED "COSENT" HEADWALL W/ ELECT., O2, COMPRESSED AIR, & VACUUM
28. HAND SINK W/ ELECTRONIC SENSOR
29. HAND SINK SINK W/ FOOT PEDAL
30. NOT USED
31. NOT USED
32. NOT USED
33. MED CART, NIC
34. AMBULANCE GURNEY, NIC
35. NOT USED
36. NOT USED
37. NOT USED
38. 5.5 M MAN MANIKEN
39. DELIVERY BED, NIC
40. POST PARTUM BED, NIC
41. PEDIATRIC CRIB, NIC
42. PEDIATRIC MONITOR
43. CHILD CRIB, NIC
44. ISOLETTE, NIC
45. L/D WARMER, NIC
46. CRASH CART, NIC
47. FETAL MONITOR/ CART, NIC
48. COMPRESSOR, NIC
49. DESK, NIC
50. WARMER / BASSINET, NIC
51. SKELETON ON A STAND, NIC
52. COPIER / PRINTER, NIC
53. ICE MAKER, NIC
54. NOT USED
55. COMMERCIAL REFRIGERATOR, CFCI
56. COMMERCIAL FREEZER, CFCI
57. LOCKERS, CFCI. PROVIDE BACKING PLATE PER 20/6.05, FLOOR ANCHORAGE PER 18/6.05.
58. WASHER, FRONT-LOADING, CFCI
59. DRYER, FRONT-LOADING, CFCI
60. TACK/BULLETIN BD (TOP OF TRAY MAX 34" AFF.). PROVIDE BACKING PLATES PER 13/6.05
61. PLATING TABLE, ACCESSIBLE, NIC. PROVIDE 30" H. X 27" H. X 19" D. CLEAR SPACE.
62. NOT USED
63. MIRROR, CFCI
64. NOT USED
65. DOUBLE SINK W/ GARBAGE DISPOSAL
66. INDUSTRIAL STAINLESS STEEL COUNTER AND BASE CABINETS
67. DRY ERASE MARKERBOARD PLAM UPPER CABINETS
68. NOT USED
69. PAPER TOWEL DISPENSER, OFCI
70. NOT USED
71. NOT USED
72. PLAM UPPER CABINET(S) WITH WRITE-ON STRIP
73. PLAM UPPER CABINET W/ OPEN SHELVES
74. DISPLAY UNIT, SEE 6/6.03
75. NOT USED
76. MOVABLE METRO SHELVING, NIC
77. NOT USED
78. NOT USED
79. NOT USED
80. CEILING MOUNTED CURTAIN & TRACK
81. NOT USED
82. NOT USED
83. NOT USED
84. NOT USED
85. NOT USED
86. NOT USED
87. OVERHEAD LIGHT
88. TEACHING WALL, SEE 18/6.05
89. PULMONARY FUNCTION MACHINE, NIC
90. NOT USED
91. NOT USED
92. NOT USED
93. NOT USED
94. O_2/AIR/VACUUM, CFCI
95. NOT USED
96. EXAM TABLE, NIC
97. NOT USED
98. EKG CART, NIC
99. NOT USED
100. NOT USED
101. FLAT PANEL DISPLAY WITH SPEAKER, SHEET AV4.03, NIC
102. WALL MOUNTED CAMERA, SEE SHEET AV4.03, NIC
103. NOT USED
104. SOAP DISPENSER, OFCI
105. NOT USED
106. AV EQUIPMENT RACK, NIC, SEE AV DRAWINGS
107. NOT USED
108. NOT USED
109. NOT USED
110. ACOUSTICAL WALL PANELS
111. "COSENT" HEADWALL W/ ELECT., SIMULATED O2, COMPRESSED AIR & VACUUM OUTLETS. MAX. 4" PROJECTION.
112. "CONTOUR" HEADWALL W/ ELECT., SIMULATED O2, COMPRESSED AIR, & VACUUM OUTLETS MAX. 4" PROJECTION
113. NOT USED
114. NOT USED
115. NOT USED
116. NOT USED
117. NOT USED
118. TACKABLE WALLCOVERING, TMP-1
119. NOT USED
120. FREESTANDING OVERHEAD AND LOWER CABINET UNIT, SEE DETAIL 10/6.03
121. ACCESSIBLE LECTERN, N.I.C. MOBILE, ADJUSTABLE HEIGHT.
122. ALTERNATE #4: FUTURE METAL STUD / GYPSUM BOARD WALL, FUTURE CASEWORK, FUTURE EQUIPMENT, SHOWN DOTTED ON PLAN. SEE FOOD SERVICE DRAWINGS.
123. UNDER-STAIR LIGHT, SEE ELECTRICAL DWGS.
124. ALTERNATE #6: ADD SLOPED FLOOR AT PLANETARIUM. ADD FLOOR RAMPS AT PLANETARIUM VESTIBULES. ADD PLANETARIUM SEATING. CHANGE PLANETARIUM DOORS & FRAMES TO STANDARD HEIGHT. (BASE BID = FLAT FLOOR)
125. ACCESSIBLE DESK. PROVIDE 30" X 48" X 27" H. CLEAR SPACE AND ISA SYMBOL.
126. PROVIDE 4 WHEELCHAIR SPACES, 33" X 48" MIN.
127. 10" DEEP NICHE FOR FLAT PANEL SCREEN. COORDINATE DIMENSIONS AND CONNECTIONS WITH OWNER.

tBP
architecture
planning
interiors
management

tBP/Architecture
5455 Wilshire Boulevard, Suite 1200
Los Angeles, CA 90036-4242
ph: 323. 556. 3788 fx: 323. 556. 3799

LICENSED ARCHITECT
STEVEN A. TAYLOR
REG. NO. C-21,
STATE OF CALIFORNIA

architect

consultant

IDENTIFICATION STAMP
DIV. OF THE STATE ARCHITECT
OFFICE OF REGULATION SERVICES
File No. 19-C11
Appl No. 03-112201
AC _____ FLS _____ SS _____
DATE _____

DSA Los Angeles Basin Regional Office
700 North Alameda Street, Suite 5-500
Los Angeles, California 90012
ph: 213/897-3995 fx: 213/897-3159/0726

agency

ANTELOPE VALLEY COLLEGE HEALTH & SCIENCE BUILDING

ANTELOPE VALLEY COMMUNITY COLLEGE DISTRICT
3041 WEST AVENUE K
LANCASTER, CA 93536-5426

owner

tBP project number : 20641.00
file name: A-0710-EP-EMT.dwg
drawn by: JS, MT checked by: MK
date: JULY 30, 2009 - 100% CD

Rev:	date:	description:
2	2/26/10	ADDENDUM #2

THIS DRAWING AND THE DESIGNS, DEPICTIONS, IDEAS AND OTHER INFORMATION CONTAINED HEREIN CONSTITUTE UNPUBLISHED WORK OF tBP/ARCHITECTURE AND SHALL REMAIN THE PROPERTY OF tBP/ARCHITECTURE IN PERPETUITY. NO PART THEREOF SHALL BE REPRODUCED, DISCLOSED, DISTRIBUTED, SOLD, PUBLISHED OR OTHERWISE USED IN ANY WAY WITHOUT THE ADVANCED EXPRESS WRITTEN CONSENT OF tBP/ARCHITECTURE.

drawing title:
ENLARGED EMT LAB PLAN & INTERIOR ELEVATIONS

drawing no.:
A-7.10
drawing of

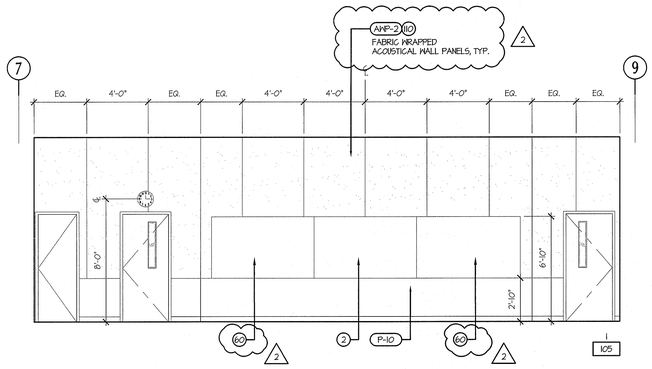

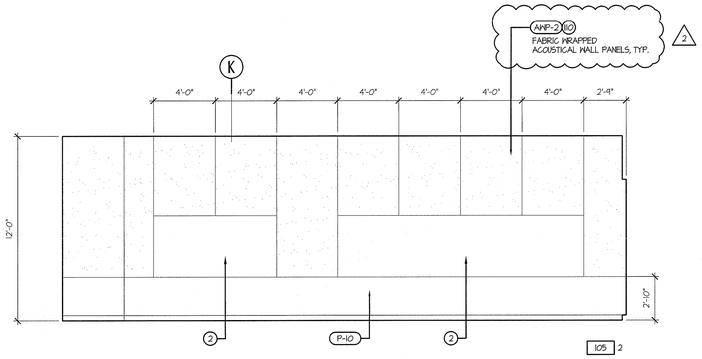

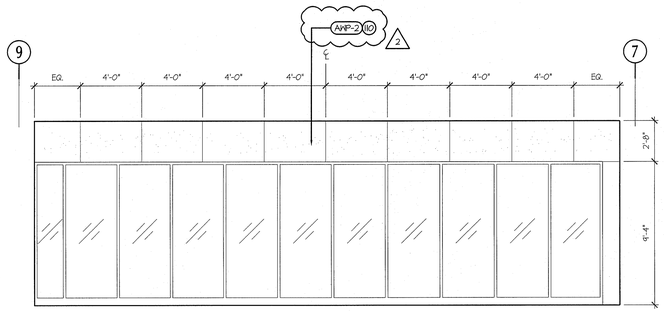

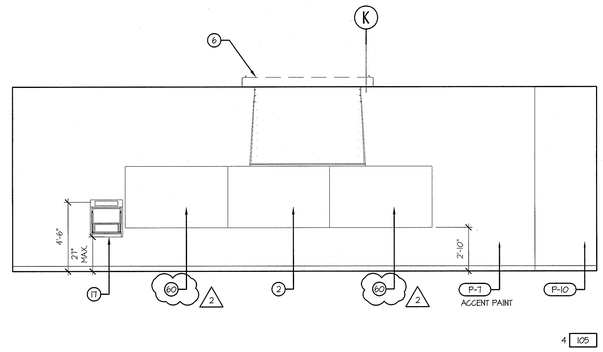

CLASSROOM INTERIOR ELEVATION

SCALE: 1/4" = 1'-0"

HS 105/ HS 103 SIM

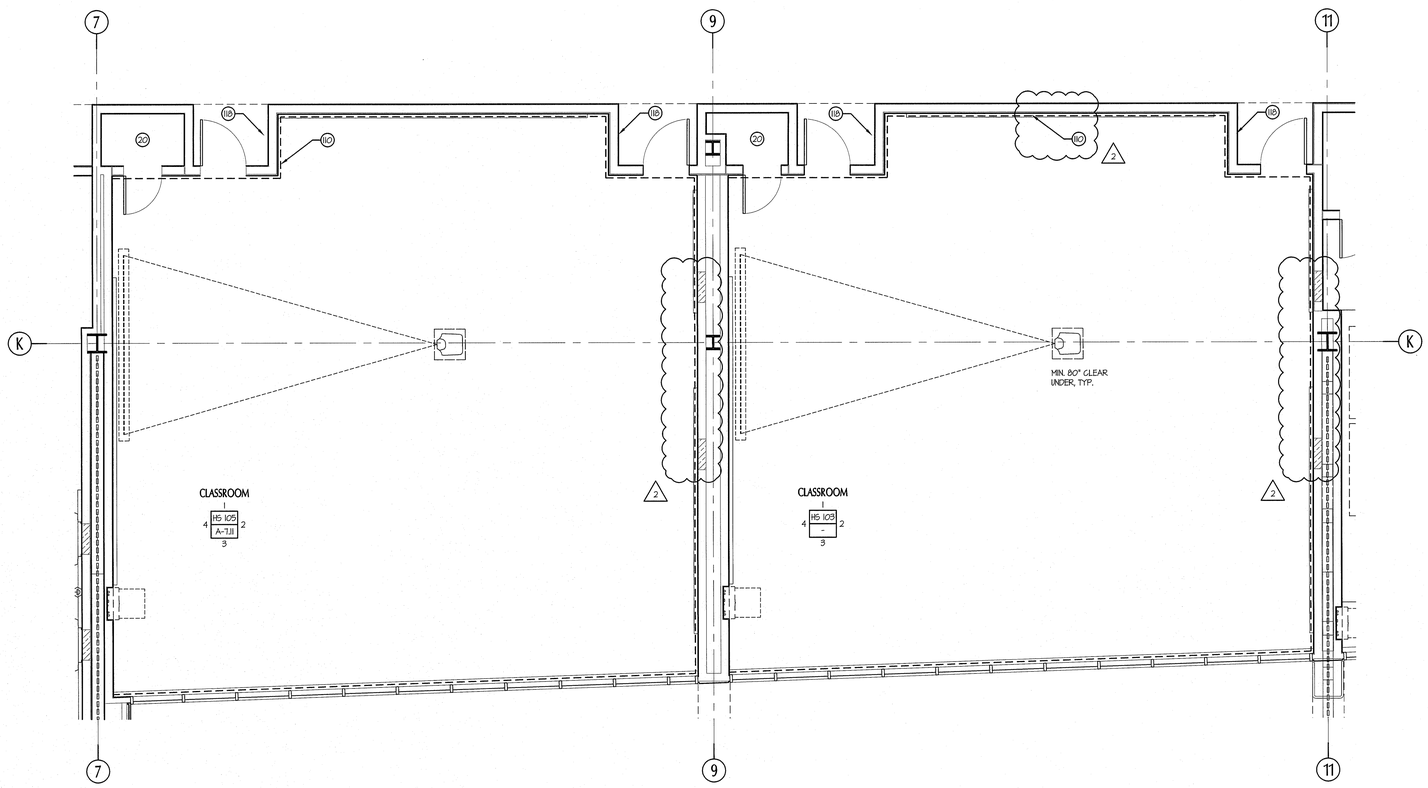

NORTH

0 1' 2' 4' 8'

ENLARGED CLASSROOM PLAN - HS 105 AND HS 103

SCALE: 1/4" = 1'-0"

1

GENERAL NOTES

1. KEYNOTES ARE STANDARD FOR ALL INTERIOR ELEVATION AND ENLARGED PLAN DRAWINGS. NOT ALL NOTES USED ON A PARTICULAR SHEET.
2. PROVIDE ADJUSTABLE SHELVES AND LOCKS IN ALL CABINETRY.
3. ALL FIXTURES AND ACCESSORIES ARE ACCESSIBLE UNLESS OTHERWISE NOTED.
4. PROVIDE EQUAL TOLERANCE AT EACH END OF UPPER & LOWER CABINET RUNS.
5. ALL FIRE ALARM DEVICES & THERMOSTATS TO BE INSTALLED CLEAR OF MARKERBOARD AND TACKBOARDS, TYP.
6. COORDINATE INSTALLATION OF ALL ACOUSTICAL PANELS TO SCRIBE AROUND ALL MARKERBOARS & TACKBOARDS, TYP.

GENERAL KEYNOTES

1. HAND SINK, REGULAR
2. MARKER BD (TOP OF TRAY MAX 34" AFF). PROVIDE BACKING PLATES PER 13/6.05.
3. ACCESSIBLE COMPUTER STATIONS, NIC
4. NOT USED
5. ADJUSTABLE SHELVES
6. RECESSED MOTORIZED PROJECTION SCREEN, SEE AUDIO VISUAL
7. PLAM COUNTERTOP
8. PLAM COUNTERTOP AND BACKSPLASH
9. PLAM UPPER CABINET
10. PLAM COUNTER W/ MANIKIN STORAGE BELOW
11. PLAM COUNTER / CHECK-IN STATION
12. PLAM FULL HEIGHT CABINET
13. PLAM ACCESSIBLE CABINET DOORS WITH KICK
14. PLAM UPPER CABINET(S) W/ WHITEBOARD FACE
15. PLAM UPPER CABINET(S) WITH MAIL BOXES
16. NOT USED
17. WALL MOUNT MEDIA BOX - SEE AUDIO VISUAL DWGS. MAX 4" PROJECTION OR MAX. 21" AFF TO BOTTOM, NIC
18. NOT USED
19. NOT USED
20. EQUIPMENT CLOSET
21. NOT USED
22. RUBBER BASE
23. NOT USED
24. NOT USED
25. HOSPITAL BED WITH OVERBED TRAY TABLE, NIC
26. BEDSIDE TABLE/ NIGHT STAND, NIC
27. (E) RELOCATED "COSENT" HEADWALL W/ ELECT., O2, COMPRESSED AIR, & VACUUM
28. HAND SINK W/ ELECTRONIC SENSOR
29. HAND SINK SINK W/ FOOT PEDAL
30. NOT USED
31. NOT USED
32. NOT USED
33. MED CART, NIC
34. AMBULANCE GURNEY, NIC
35. NOT USED
36. NOT USED
37. NOT USED
38. 9.5 M MAN MANIKEN
39. DELIVERY BED, NIC
40. POST PARTUM BED, NIC
41. PEDIATRIC CRIB, NIC
42. PEDIATRIC MONITOR
43. CHILD CRIB, NIC
44. ISOLETTE, NIC
45. L/D WARMER, NIC
46. CRASH CART, NIC
47. FETAL MONITOR/ CART, NIC
48. COMPRESSOR, NIC
49. DESK, NIC
50. WARMER / BASSINET, NIC
51. SKELETON ON A STAND, NIC
52. COPIER / PRINTER, NIC
53. ICE MAKER, NIC
54. NOT USED
55. COMMERCIAL REFRIGERATOR, CFCI
56. COMMERICAL FREEZER, CFCI
57. LOCKERS, CFCI. PROVIDE BACKING PLATE PER 20/6.05, FLOOR ANCHORAGE PER 18/6.05.
58. WASHER, FRONT-LOADING, CFCI
59. DRYER, FRONT-LOADING, CFCI
60. TACKBULLETIN BD (TOP OF TRAY MAX 34" AFF.). PROVIDE BACKING PLATES PER 13/6.05
61. PLATING TABLE, ACCESSIBLE, NIC. PROVIDE 30" H. X 27" H. X 19" D. CLEAR SPACE.
62. NOT USED
63. MIRROR, CFCI
64. NOT USED
65. DOUBLE SINK W/ GARBAGE DISPOSAL
66. INDUSTRIAL STAINLESS STEEL COUNTER AND BASE CABINETS
67. DRY ERASE MARKERBOARD PLAM UPPER CABINETS
68. NOT USED
69. PAPER TOWEL DISPENSER, OFCI
70. NOT USED
71. NOT USED
72. PLAM UPPER CABINET(S) WITH WRITE-ON STRIP
73. PLAM UPPER CABINET W/ OPEN SHELVES
74. DISPLAY UNIT, SEE 6/6.03
75. NOT USED
76. MOVABLE METRO SHELVING, NIC
77. NOT USED
78. NOT USED
79. NOT USED
80. CEILING MOUNTED CURTAIN & TRACK
81. NOT USED
82. NOT USED
83. NOT USED
84. NOT USED
85. NOT USED
86. NOT USED
87. OVERHEAD LIGHT
88. TEACHING WALL, SEE 18/6.05
89. PULMONARY FUNCTION MACHINE, NIC
90. NOT USED
91. NOT USED
92. NOT USED
93. NOT USED
94. O_2/AIR/VACUUM, OFCI
95. NOT USED
96. EXAM TABLE, NIC
97. NOT USED
98. EKG CART, NIC
99. NOT USED
100. NOT USED
101. FLAT PANEL DISPLAY WITH SPEAKER, SHEET AV4.03, NIC
102. WALL MOUNTED CAMERA, SEE SHEET AV4.03, NIC
103. NOT USED
104. SOAP DISPENSER, OFCI
105. NOT USED
106. AV EQUIPMENT RACK, NIC, SEE AV DRAWINGS
107. NOT USED
108. NOT USED
109. NOT USED
110. ACOUSTICAL WALL PANELS
111. "COSENT" HEADWALL W/ ELECT., SIMULATED O2, COMPRESSED AIR & VACUUM OUTLETS. MAX. 4" PROJECTION.
112. "CONTOUR" HEADWALL W/ ELECT., SIMULATED O2, COMPRESSED AIR, & VACUUM OUTLETS MAX. 4" PROJECTION
113. NOT USED
114. NOT USED
115. NOT USED
116. NOT USED
117. NOT USED
118. TACKABLE WALLCOVERING, TWP-1
119. NOT USED
120. FREESTANDING OVERHEAD AND LOWER CABINET UNIT, SEE DETAIL 10/6.03
121. ACCESSIBLE LECTERN, N.I.C. MOBILE, ADJUSTABLE HEIGHT.
122. ALTERNATE #4: FUTURE METAL STUD / GYPSUM BOARD WALL, FUTURE CASEWORK, FUTURE EQUIPMENT, SHOWN DOTTED ON PLAN. SEE FOOD SERVICE DRAWINGS.
123. UNDER-STAIR LIGHT, SEE ELECTRICAL DWGS.
124. ALTERNATE #6: ADD SLOPED FLOOR AT PLANETARIUM. ADD FLOOR RAMPS AT PLANETARIUM VESTIBULES. ADD PLANETARIUM SEATING. CHANGE PLANETARIUM DOORS & FRAMES TO STANDARD HEIGHT. (BASE BID = FLAT FLOOR)
125. ACCESSIBLE DESK. PROVIDE 30" X 48" X 27" H. CLEAR SPACE AND ISA SYMBOL.
126. PROVIDE 4 WHEELCHAIR SPACES, 33" X 48" MIN.
127. 10" DEEP NICHE FOR FLAT PANEL SCREEN. COORDINATE DIMENSIONS AND CONNECTIONS WITH OWNER.

tBP
architecture
planning
interiors
management

LICENSED ARCHITECT
STEVEN D. TALBOT
NO. 6302
REN. 1-31-11
STATE OF CALIFORNIA

tBP/Architecture
5455 Wilshire Boulevard, Suite 1200
Los Angeles, CA 90036-4242
ph: 323. 556. 3788 fx: 323. 556. 3799
architect

consultant

IDENTIFICATION STAMP
DIV. OF THE STATE ARCHITECT
OFFICE OF REGULATION SERVICES
File No. 19-C11
Appl No. 03-112201
AC ____ RS ____ SS ____
DATE ____

DSA Los Angeles Basin Regional Office
700 North Alameda Street, Suite 5-500
Los Angeles, California 90012
ph: 213/897-3995 fx: 213/897-3159/0726
agency

ANTELOPE VALLEY COLLEGE HEALTH & SCIENCE BUILDING

ANTELOPE VALLEY COMMUNITY COLLEGE DISTRICT
3041 WEST AVENUE K
LANCASTER, CA 93536-5426

owner

tBP project number : 206411.00
file name: A-0711-EP-CLA.dwg
drawn by: JS checked by: MK
date: JULY 30, 2009 - 100% CD

Rev:	date:	description:
2	2/26/10	ADDENDUM #2

THIS DRAWING AND THE DESIGNS, DEPICTIONS, IDEAS AND OTHER INFORMATION CONTAINED HEREIN CONSTITUTE UNPUBLISHED WORK OF tBP/ARCHITECTURE AND SHALL REMAIN THE PROPERTY OF tBP/ARCHITECTURE IN PERPETUITY. NO PART THEREOF SHALL BE REPRODUCED, DISCLOSED, DISTRIBUTED, SOLD, PUBLISHED OR OTHERWISE USED IN ANY WAY WITHOUT THE ADVANCED EXPRESS WRITTEN CONSENT OF tBP/ARCHITECTURE.

drawing title:
ENLARGED CLASSROOM PLAN & INT ELEVATIONS

drawing no.:
A-7.11

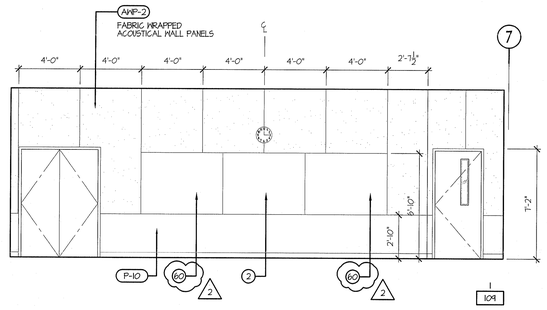

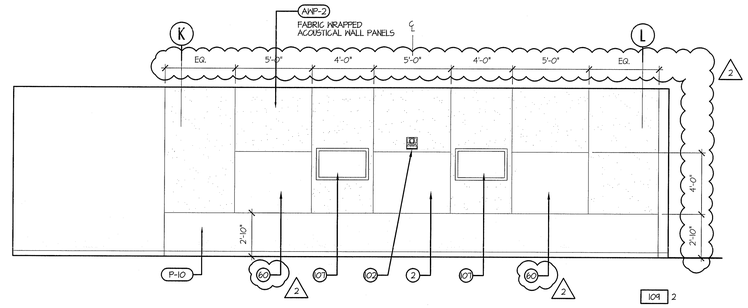

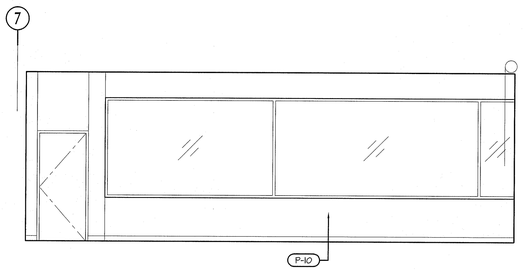

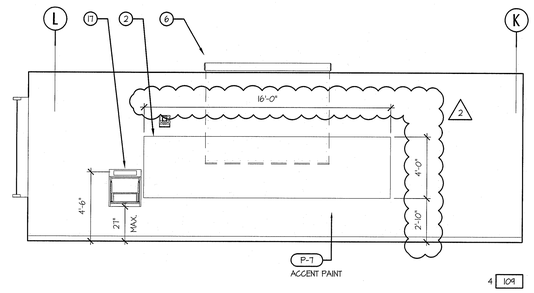

DISTANCE LEARNING CLASSROOM INTERIOR ELEVATION

SCALE: 1/4" = 1'-0"

HS 109

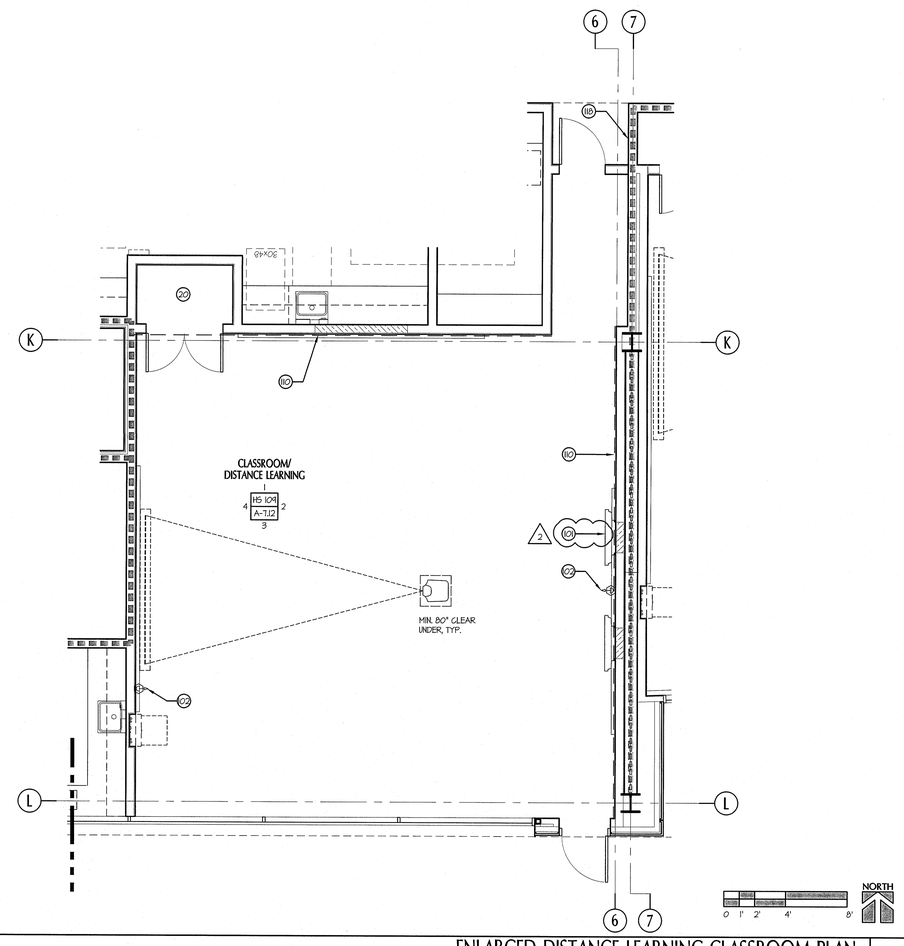

ENLARGED DISTANCE LEARNING CLASSROOM PLAN

SCALE: 1/4" = 1'-0"

1

GENERAL NOTES

1. KEYNOTES ARE STANDARD FOR ALL INTERIOR ELEVATION AND ENLARGED PLAN DRAWINGS. NOT ALL NOTES USED ON A PARTICULAR SHEET.
2. PROVIDE ADJUSTABLE SHELVES AND LOCKS IN ALL CABINETRY.
3. ALL FIXTURES AND ACCESSORIES ARE ACCESSIBLE UNLESS OTHERWISE NOTED.
4. PROVIDE EQUAL TOLEARANCE AT EACH END OF UPPER & LOWER CABINET RUNS.
5. ALL FIRE ALARM DEVICES & THERMOSTATS TO BE INSTALLED CLEAR OF MARKERBOARD AND TACKBOARDS, TYP.
6. COORDINATE INSTALLATION OF ALL ACOUSTICAL PANELS TO SCRIBE AROUND ALL MARKERBOARS & TACKBOARDS, TYP.

GENERAL KEYNOTES

1. HAND SINK, REGULAR
2. MARKER BD (TOP OF TRAY MAX 34" AFF). PROVIDE BACKING PLATES PER 13/6.05.
3. ACCESSIBLE COMPUTER STATIONS, NIC
4. NOT USED
5. ADJUSTABLE SHELVES
6. RECESSED MOTORIZED PROJECTION SCREEN, SEE AUDIO VISUAL
7. PLAM COUNTERTOP
8. PLAM COUNTERTOP AND BACKSPLASH
9. PLAM UPPER CABINET
10. PLAM COUNTER W/ MANIKIN STORAGE BELOW
11. PLAM COUNTER / CHECK-IN STATION
12. PLAM FULL HEIGHT CABINET
13. PLAM ACCESSIBLE CABINET DOORS WITH EDGE
14. PLAM UPPER CABINET(S) W/ WHITEBOARD FACE
15. PLAM UPPER CABINET(S) WITH MAIL BOXES
16. NOT USED
17. WALL MOUNT MEDIA BOX - SEE AUDIO VISUAL DWGS. MAX 4" PROJECTION OR MAX. 21" AFF TO BOTTOM, NIC.
18. NOT USED
19. NOT USED
20. EQUIPMENT CLOSET
21. NOT USED
22. RUBBER BASE
23. NOT USED
24. NOT USED
25. HOSPITAL BED WITH OVERBED TRAY TABLE, NIC
26. BEDSIDE TABLE/ NIGHT STAND, NIC
27. (E) RELOCATED "COSENT" HEADWALL W/ ELECT., O2, COMPRESSED AIR, & VACUUM
28. HAND SINK W/ ELECTRONIC SENSOR
29. HAND SINK SINK W/ FOOT PEDAL
30. NOT USED
31. NOT USED
32. NOT USED
33. MED CART, NIC
34. AMBULANCE GURNEY, NIC
35. NOT USED
36. NOT USED
37. NOT USED
38. 4.5 H MAN MANIKEN
39. DELIVERY BED, NIC
40. POST PARTUM BED, NIC
41. PEDIATRIC CRIB, NIC
42. PEDIATRIC MONITOR
43. CHILD CRIB, NIC
44. ISOLETTE, NIC
45. L/D WARMER, NIC
46. CRASH CART, NIC
47. FETAL MONITOR/ CART, NIC
48. COMPRESSOR, NIC
49. DESK, NIC
50. WARMER / BASSINET, NIC
51. SKELETON ON A STAND, NIC
52. COPIER / PRINTER, NIC
53. ICE MAKER, NIC
54. NOT USED
55. COMMERCIAL REFRIGERATOR, CFCI
56. COMMERICAL FREEZER, CFCI
57. LOCKERS, CFCI. PROVIDE BACKING PLATE PER 20/6.05, FLOOR ANCHORAGE PER 18/6.05.
58. WASHER, FRONT-LOADING, CFCI
59. DRYER, FRONT-LOADING, CFCI
60. TACKBULLETIN BD (TOP OF TRAY MAX 34" AFF.). PROVIDE BACKING PLATES PER 13/6.05.
61. PLATING TABLE, ACCESSIBLE, NIC. PROVIDE 30" H. X 27" H. X 14" D. CLEAR SPACE.
62. NOT USED
63. MIRROR, CFCI
64. NOT USED
65. DOUBLE SINK W/ GARBAGE DISPOSAL
66. INDUSTRIAL STAINLESS STEEL COUNTER AND BASE CABINETS
67. DRY ERASE MARKERBOARD PLAM UPPER CABINETS
68. NOT USED
69. PAPER TOWEL DISPENSER, OFCI
70. NOT USED
71. NOT USED
72. PLAM UPPER CABINET(S) WITH WRITE-ON STRIP
73. PLAM UPPER CABINET W/ OPEN SHELVES
74. DISPLAY UNIT, SEE 6/6.03
75. NOT USED
76. MOVABLE METRO SHELVING, NIC
77. NOT USED
78. NOT USED
79. NOT USED
80. CEILING MOUNTED CURTAIN & TRACK
81. NOT USED
82. NOT USED
83. NOT USED
84. NOT USED
85. NOT USED
86. NOT USED
87. OVERHEAD LIGHT
88. TEACHING WALL, SEE 18/6.05
89. PULMONARY FUNCTION MACHINE, NIC
90. NOT USED
91. NOT USED
92. NOT USED
93. NOT USED
94. O_2/AIR/VACUUM, OFCI
95. NOT USED
96. EXAM TABLE, NIC
97. NOT USED
98. EKG CART, NIC
99. NOT USED
100. NOT USED
101. FLAT PANEL DISPLAY WITH SPEAKER, SHEET AV4.03, NIC
102. WALL MOUNTED CAMERA, SEE SHEET AV4.03, NIC
103. NOT USED
104. SOAP DISPENSER, OFCI
105. NOT USED
106. AV EQUIPMENT RACK, NIC, SEE AV DRAWINGS
107. NOT USED
108. NOT USED
109. NOT USED
110. ACOUSTICAL WALL PANELS
111. "COSENT" HEADWALL W/ ELECT., SIMULATED O2, COMPRESSED AIR & VACUUM OUTLETS. MAX. 4" PROJECTION.
112. "CONTOUR" HEADWALL W/ ELECT., SIMULATED O2, COMPRESSED AIR, & VACUUM OUTLETS MAX. 4" PROJECTION
113. NOT USED
114. NOT USED
115. NOT USED
116. NOT USED
117. NOT USED
118. TACKABLE WALLCOVERING, TWP-1
119. NOT USED
120. FREESTANDING OVERHEAD AND LOWER CABINET UNIT, SEE DETAIL 10/6.03
121. ACCESSIBLE LECTERN, N.I.C. MOBILE, ADJUSTABLE HEIGHT.
122. ALTERNATE #4: FUTURE METAL STUD / GYPSUM BOARD WALL, FUTURE CASEWORK, FUTURE EQUIPMENT, SHOWN DOTTED ON PLAN. SEE FOOD SERVICE DRAWINGS.
123. UNDER-STAIR LIGHT, SEE ELECTRICAL DWGS.
124. ALTERNATE #6: ADD SLOPED FLOOR AT PLANETARIUM. ADD FLOOR RAMPS AT PLANETARIUM VESTIBULES. ADD PLANETARIUM SEATING. CHANGE PLANETARIUM DOORS & FRAMES TO STANDARD HEIGHT. (BASE BID = FLAT FLOOR)
125. ACCESSIBLE DESK. PROVIDE 30" X 48" X 27" H. CLEAR SPACE AND ISA SYMBOL.
126. PROVIDE 4 WHEELCHAIR SPACES, 33" X 48" MIN.
127. 10" DEEP NICHE FOR FLAT PANEL SCREEN. COORDINATE DIMENSIONS AND CONNECTIONS WITH OWNER.

tBP
architecture
planning
interiors
management

LICENSED ARCHITECT
TIMOTHY A. BUTTS
NO. C-17604
EXP. 4-30-11
STATE OF CALIFORNIA

tBP/Architecture
5455 Wilshire Boulevard, Suite 1200
Los Angeles, CA 90036-4242
ph: 323. 556. 3788 fx: 323. 556. 3799

architect

consultant

IDENTIFICATION STAMP
DIV. OF THE STATE ARCHITECT
OFFICE OF REGULATION SERVICES
File No. 19-C11
Appl No. 03-112201
AC _____ RS _____ SS _____
DATE _____

DSA Los Angeles Basin Regional Office
700 North Alameda Street, Suite 5-500
Los Angeles, California 90012
ph: 213/897-3995 fx: 213/897-3159/0726

agency

ANTELOPE VALLEY COLLEGE HEALTH & SCIENCE BUILDING

ANTELOPE VALLEY COMMUNITY COLLEGE DISTRICT
3041 WEST AVENUE K
LANCASTER, CA 93536-5426

owner

tBP project number : 20641.00

file name: A-0712-EP-CLA.dwg

drawn by: JS checked by: MK

date: JULY 30, 2009 - 100% CD

Rev:	date:	description:
2	2/26/10	ADDENDUM #2

THIS DRAWING AND THE DESIGNS, DEPICTIONS, IDEAS AND OTHER INFORMATION CONTAINED HEREIN CONSTITUTE UNPUBLISHED WORK OF tBP/ARCHITECTURE AND SHALL REMAIN THE PROPERTY OF tBP/ARCHITECTURE IN PERPETUITY. NO PART THEREOF SHALL BE REPRODUCED, DISCLOSED, DISTRIBUTED, SOLD, PUBLISHED OR OTHERWISE USED IN ANY WAY WITHOUT THE ADVANCED EXPRESS WRITTEN CONSENT OF tBP/ARCHITECTURE.

drawing title:
ENLARGED DIST LEARN CR PLAN & INT ELEVATIONS

drawing no.:
A-7.12

drawing of

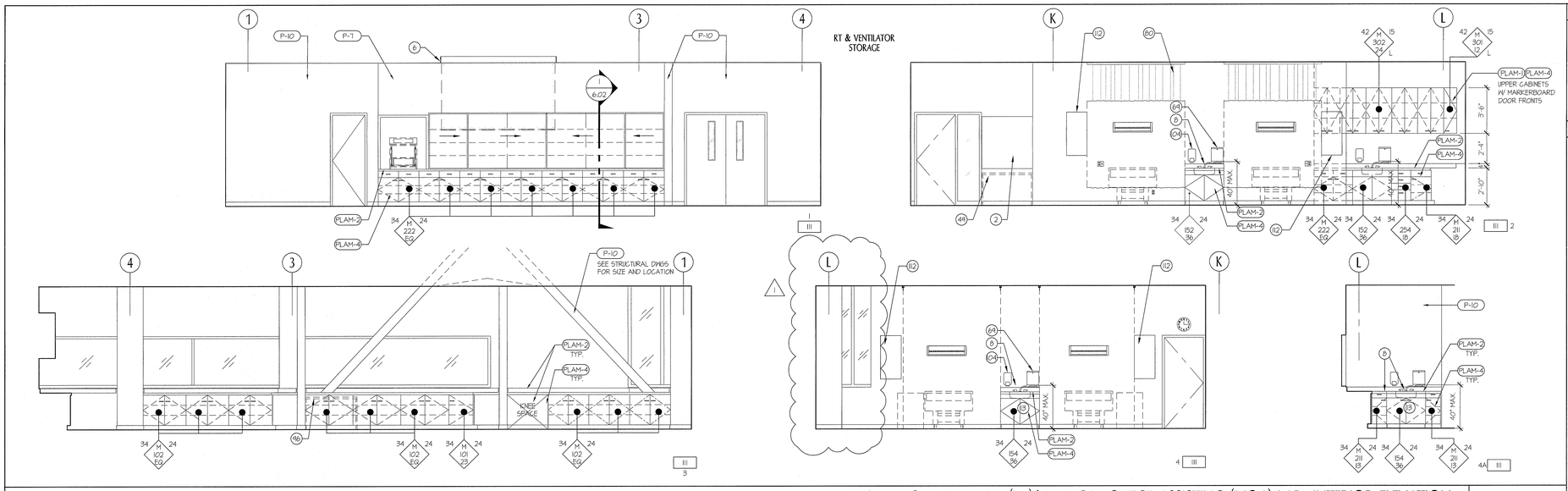

RESPIRATORY THERAPY (RT)/ MEDICAL OFFICE ASSISTING (MOA) LAB INTERIOR ELEVATION — HS 111
SCALE: 1/4" = 1'-0"

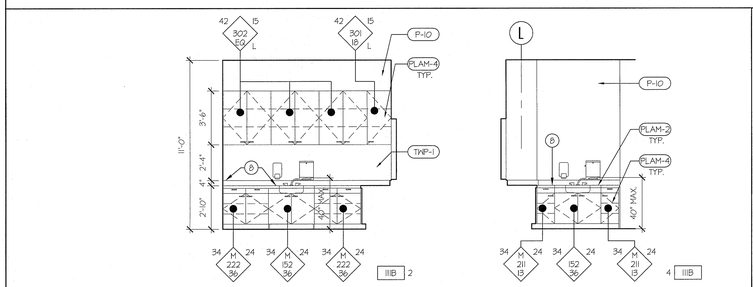

MOA PREP INTERIOR ELEVATION — HS 111 B
SCALE: 1/4" = 1'-0"

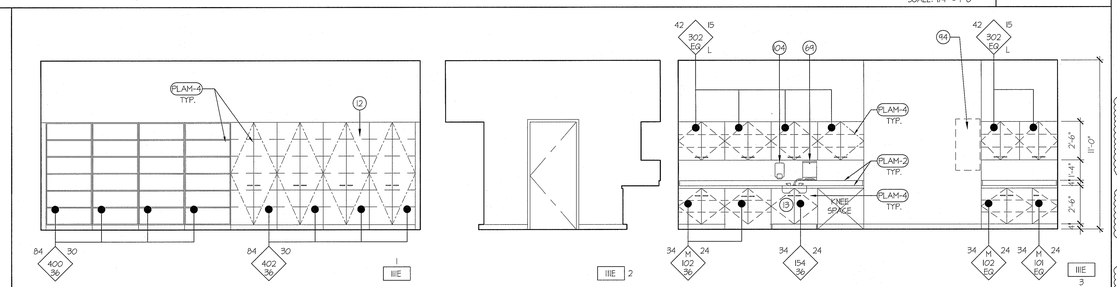

RT & VENTILATOR STORAGE INTERIOR ELEVATION — HS 111E
SCALE: 1/4" = 1'-0"

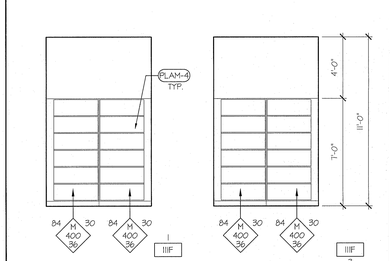

MOA STORAGE INTERIOR ELEVATION — HS 111 F
SCALE: 1/4" = 1'-0"

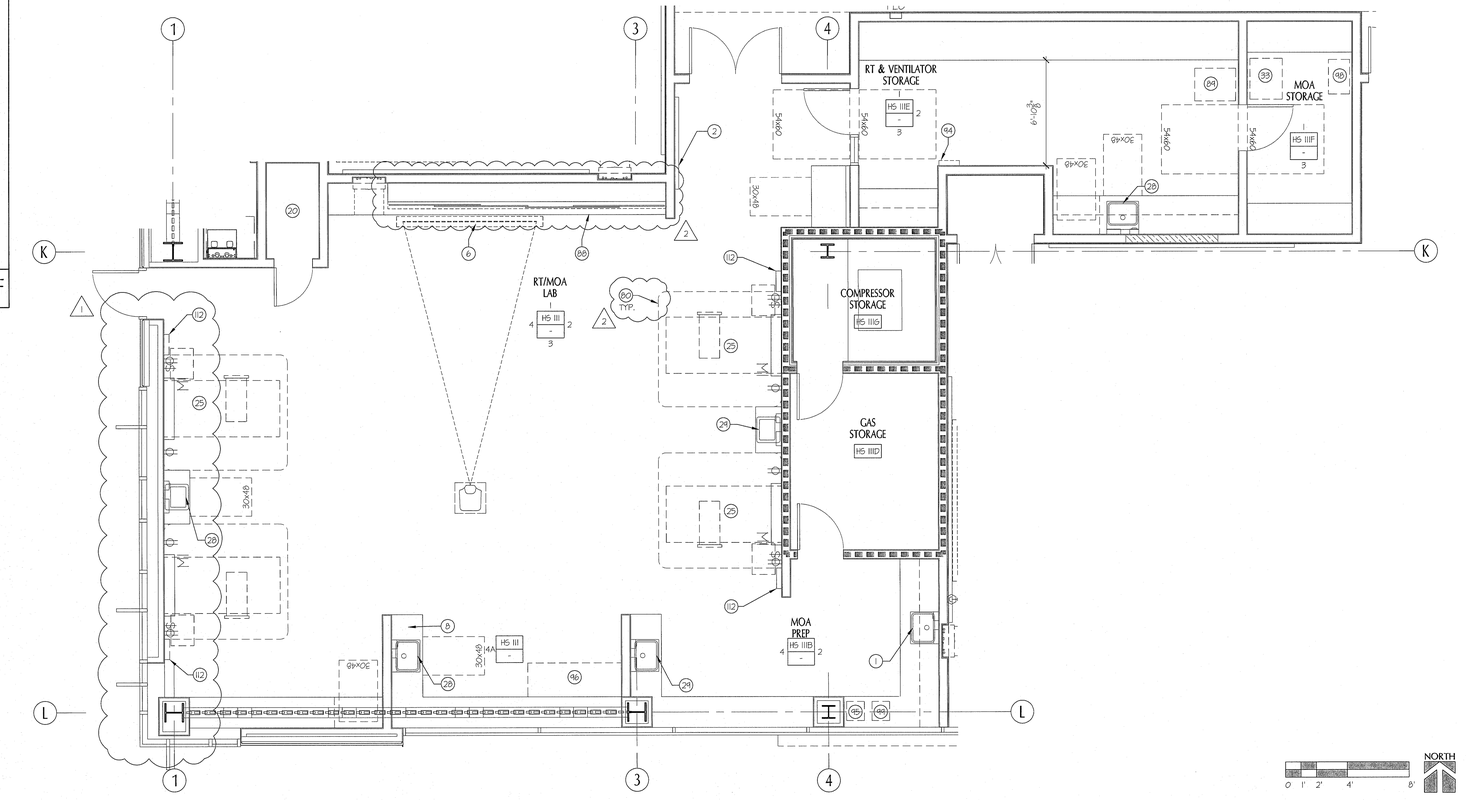

ENLARGED RESPIRATORY THERAPY (RT)/ MEDICAL OFFICE ASSISTING (MOA) LAB PLAN — 1
SCALE: 1/4" = 1'-0"

GENERAL NOTES

1. KEYNOTES ARE STANDARD FOR ALL INTERIOR ELEVATION AND ENLARGED PLAN DRAWINGS. NOT ALL NOTES USED ON A PARTICULAR SHEET.
2. PROVIDE ADJUSTABLE SHELVES AND LOCKS IN ALL CABINETRY.
3. ALL FIXTURES AND ACCESSORIES ARE ACCESSIBLE UNLESS OTHERWISE NOTED.
4. PROVIDE EQUAL TOLERANCE AT EACH END OF UPPER & LOWER CABINET RUNS.
5. ALL FIRE ALARM DEVICES & THERMOSTATS TO BE INSTALLED CLEAR OF MARKERBOARD AND TACKBOARDS, TYP.
6. COORDINATE INSTALLATION OF ALL ACOUSTICAL PANELS TO SCRIBE AROUND ALL MARKERBOARD & TACKBOARDS, TYP.

GENERAL KEYNOTES

1. HAND SINK, REGULAR
2. MARKER BD (TOP OF TRAY MAX 34" AFF). PROVIDE BACKING PLATES PER 13/6.05.
3. ACCESSIBLE COMPUTER STATIONS, NIC
4. NOT USED
5. ADJUSTABLE SHELVES
6. RECESSED MOTORIZED PROJECTION SCREEN, SEE AUDIO VISUAL
7. PLAM COUNTERTOP
8. PLAM COUNTERTOP AND BACKSPLASH
9. PLAM UPPER CABINET
10. PLAM COUNTER W/ MANIKIN STORAGE BELOW
11. PLAM COUNTER / CHECK-IN STATION
12. PLAM FULL HEIGHT CABINET
13. PLAM ACCESSIBLE CABINET DOORS WITH KICK
14. PLAM UPPER CABINET(S) W/ WHITEBOARD FACE
15. PLAM UPPER CABINET(S) WITH MAIL BOXES
16. NOT USED
17. WALL MOUNT MEDIA BOX - SEE AUDIO VISUAL DWGS. MAX 4" PROJECTION OR MAX. 27" AFF TO BOTTOM, NIC
18. NOT USED
19. NOT USED
20. EQUIPMENT CLOSET
21. NOT USED
22. RUBBER BASE
23. NOT USED
24. NOT USED
25. HOSPITAL BED WITH OVERBED TRAY TABLE, NIC
26. BEDSIDE TABLE/ NIGHT STAND, NIC
27. (E) RELOCATED "COSENT" HEADWALL W/ ELECT., O2, COMPRESSED AIR, & VACUUM
28. HAND SINK W/ ELECTRONIC SENSOR
29. HAND SINK SINK W/ FOOT PEDAL
30. NOT USED
31. NOT USED
32. NOT USED
33. MED CART, NIC
34. AMBULANCE GURNEY, NIC
35. NOT USED
36. NOT USED
37. NOT USED
38. 3.5 M MAN MANIKEN
39. DELIVERY BED, NIC
40. POST PARTUM BED, NIC
41. PEDIATRIC CRIB, NIC
42. PEDIATRIC MONITOR
43. CHILD CRIB, NIC
44. ISOLETTE, NIC
45. L/D WARMER, NIC
46. CRASH CART, NIC
47. FETAL MONITOR/ CART, NIC
48. COMPRESSOR, NIC
49. DESK, NIC
50. WARMER / BASSINET, NIC
51. SKELETON ON A STAND, NIC
52. COPIER / PRINTER, NIC
53. ICE MAKER, NIC
54. NOT USED
55. COMMERCIAL REFRIGERATOR, CFCI
56. COMMERCIAL FREEZER, CFCI
57. LOCKERS, CFCI. PROVIDE BACKING PLATE PER 20/6.05, FLOOR ANCHORAGE PER 18/6.05.
58. WASHER, FRONT-LOADING, CFCI
59. DRYER, FRONT-LOADING, CFCI
60. TACKBULLETIN BD (TOP OF TRAY MAX 34" AFF.). PROVIDE BACKING PLATES PER 13/6.05.
61. PLATING TABLE, ACCESSIBLE, NIC. PROVIDE 30" W. X 21" H. X 19" D. CLEAR SPACE.
62. NOT USED
63. MIRROR, CFCI
64. NOT USED
65. DOUBLE SINK W/ GARBAGE DISPOSAL
66. INDUSTRIAL STAINLESS STEEL COUNTER AND BASE CABINETS
67. DRY ERASE MARKERBOARD PLAM UPPER CABINETS
68. NOT USED
69. PAPER TOWEL DISPENSER, CFCI
70. NOT USED
71. NOT USED
72. PLAM UPPER CABINET(S) WITH WRITE-ON STRIP
73. PLAM UPPER CABINET W/ OPEN SHELVES
74. DISPLAY UNIT, SEE 6/6.05
75. NOT USED
76. MOVABLE METRO SHELVING, NIC
77. NOT USED
78. NOT USED
79. NOT USED
80. CEILING MOUNTED CURTAIN & TRACK
81. NOT USED
82. NOT USED
83. NOT USED
84. NOT USED
85. NOT USED
86. NOT USED
87. OVERHEAD LIGHT
88. TEACHING WALL, SEE 18/6.05
89. PULMONARY FUNCTION MACHINE, NIC
90. NOT USED
91. NOT USED
92. NOT USED
93. NOT USED
94. O_2/AIR/VACUUM, CFCI
95. NOT USED
96. EXAM TABLE, NIC
97. NOT USED
98. EKG CART, NIC
99. NOT USED
100. NOT USED
101. FLAT PANEL DISPLAY WITH SPEAKER, SHEET AV4.03, NIC
102. WALL MOUNTED CAMERA, SEE SHEET AV4.03, NIC
103. NOT USED
104. SOAP DISPENSER, CFCI
105. NOT USED
106. AV EQUIPMENT RACK, NIC, SEE AV DRAWINGS
107. NOT USED
108. NOT USED
109. NOT USED
110. ACOUSTICAL WALL PANELS
111. "COSENT" HEADWALL W/ ELECT., SIMULATED O2, COMPRESSED AIR & VACUUM OUTLETS. MAX. 4" PROJECTION.
112. "CONTOUR" HEADWALL W/ ELECT., SIMULATED O2, COMPRESSED AIR, & VACUUM OUTLETS. MAX. 4" PROJECTION
113. NOT USED
114. NOT USED
115. NOT USED
116. NOT USED
117. NOT USED
118. TACKABLE WALLCOVERING, TWP-1
119. NOT USED
120. FREESTANDING OVERHEAD AND LOWER CABINET UNIT, SEE DETAIL 10/6.03
121. ACCESSIBLE LECTERN, N.I.C. MOBILE, ADJUSTABLE HEIGHT.
122. ALTERNATE #4: FUTURE METAL STUD / GYPSUM BOARD WALL, FUTURE CASEWORK, FUTURE EQUIPMENT, SHOWN DOTTED ON PLAN. SEE FOOD SERVICE DRAWINGS.
123. UNDER-STAIR LIGHT, SEE ELECTRICAL DWGS.
124. ALTERNATE #6: ADD SLOPED FLOOR AT PLANETARIUM. ADD FLOOR RAMPS AT PLANETARIUM VESTIBULES. ADD PLANETARIUM SEATING. CHANGE PLANETARIUM DOORS & FRAMES TO STANDARD HEIGHT. (BASE BID = FLAT FLOOR)
125. ACCESSIBLE DESK. PROVIDE 30" X 48" X 27" H. CLEAR SPACE AND ISA SYMBOL.
126. PROVIDE 4 WHEELCHAIR SPACES, 33" X 48" MIN.
127. 10" DEEP NICHE FOR FLAT PANEL SCREEN. COORDINATE DIMENSIONS AND CONNECTIONS WITH OWNER.

tBP
architecture
planning
interiors
management

tBP/Architecture
5455 Wilshire Boulevard, Suite 1200
Los Angeles, CA 90036-4242
ph: 323. 556. 3788 fx: 323. 556. 3799

LICENSED ARCHITECT
STATE OF CALIFORNIA

architect

consultant

IDENTIFICATION STAMP
DIV. OF THE STATE ARCHITECT
OFFICE OF REGULATION SERVICES
File No. 19-C11
Appl No. 03-112201
AC ____ RLS ____ SS ____
DATE ____

DSA Los Angeles Basin Regional Office
700 North Alameda Street, Suite 5-500
Los Angeles, California 90012
ph: 213/897-3995 fx: 213/897-3159/0726

agency

owner

ANTELOPE VALLEY COLLEGE HEALTH & SCIENCE BUILDING

ANTELOPE VALLEY COMMUNITY COLLEGE DISTRICT
3041 WEST AVENUE K
LANCASTER, CA 93536-5426

tBP project number : 208411.00
file name: A-0713-EP-RT.dwg
drawn by: JS checked by: MK
date: JULY 30, 2009 - 100% CD

Rev:	date:	description:
1	11/16/09	ADDENDUM #1
2	2/26/10	ADDENDUM #2

THIS DRAWING AND THE DESIGNS, DEPICTIONS, IDEAS AND OTHER INFORMATION CONTAINED HEREIN CONSTITUTE UNPUBLISHED WORK OF tBP/ARCHITECTURE AND SHALL REMAIN THE PROPERTY OF tBP/ARCHITECTURE IN PERPETUITY. NO PART THEREOF SHALL BE REPRODUCED, DISCLOSED, DISTRIBUTED, SOLD, PUBLISHED OR OTHERWISE USED IN ANY WAY WITHOUT THE ADVANCED EXPRESS WRITTEN CONSENT OF tBP/ARCHITECTURE.

drawing title:
ENLARGED RT/ MOA LAB PLAN & INT ELEVATIONS

drawing no.:
A-7.13
drawing of

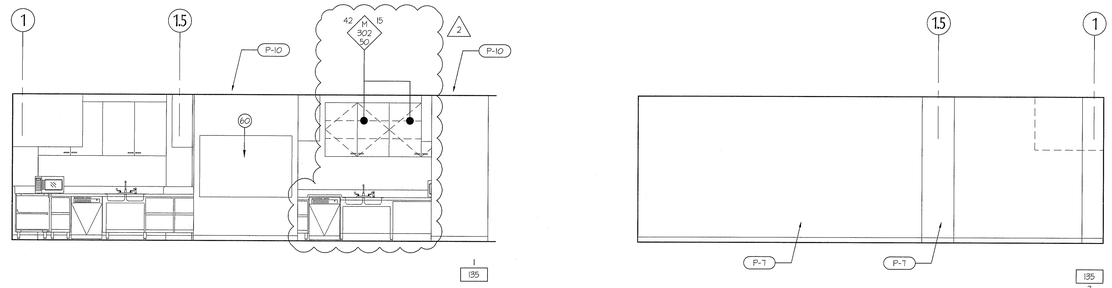

NUTRITION / FOOD LAB INTERIOR ELEVATION

SCALE: 1/4" = 1'-0"

HS 135

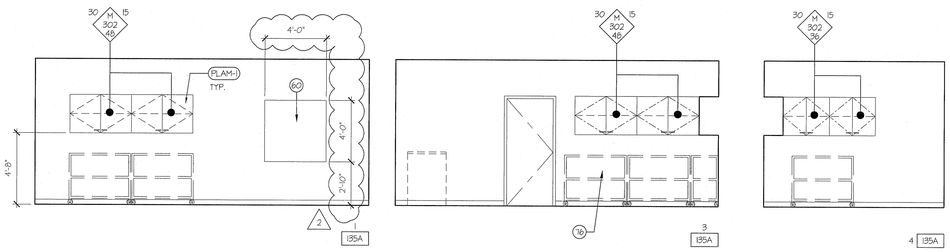

WINE STORAGE ROOM INTERIOR ELEVATION

SCALE: 1/4" = 1'-0"

HS 135A

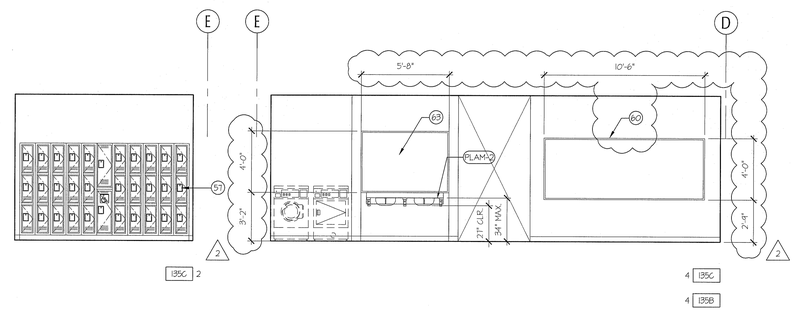

STUDENT PREP INTERIOR ELEVATION

SCALE: 1/4" = 1'-0"

HS 135C

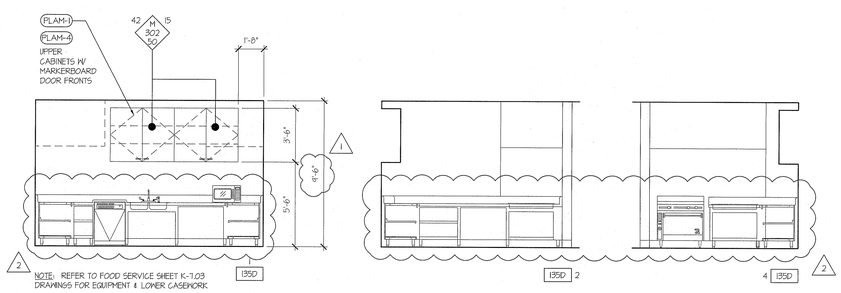

NUTRITION/ FOOD LAB INTERIOR ELEVATION

SCALE: 1/4" = 1'-0"

HS 135D

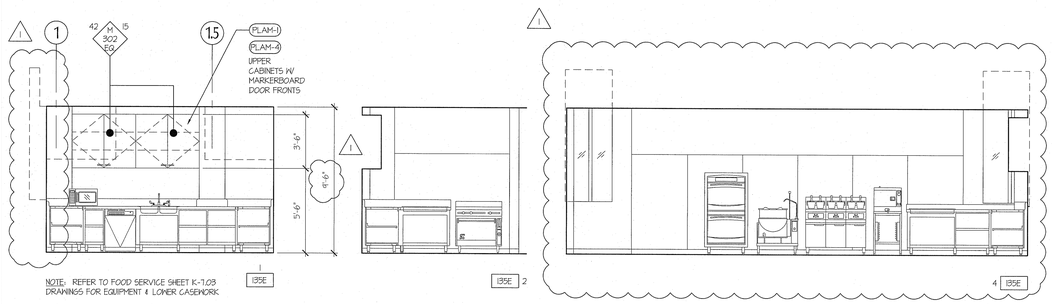

NUTRITION/ FOOD LAB INTERIOR ELEVATION

SCALE: 1/4" = 1'-0"

HS 135E

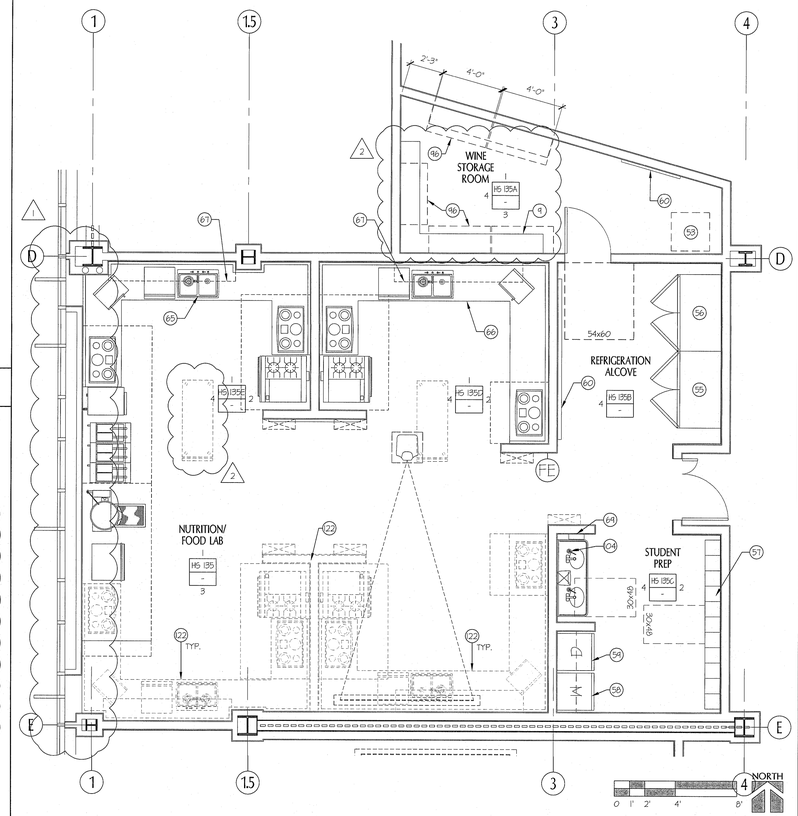

ENLARGED NUTRITION/ FOOD LAB PLAN

SCALE: 1/4" = 1'-0"

1

GENERAL NOTES

1. KEYNOTES ARE STANDARD FOR ALL INTERIOR ELEVATION AND ENLARGED PLAN DRAWINGS. NOT ALL NOTES USED ON A PARTICULAR SHEET.
2. PROVIDE ADJUSTABLE SHELVES AND LOCKS IN ALL CABINETRY.
3. ALL FIXTURES AND ACCESSORIES ARE ACCESSIBLE UNLESS OTHERWISE NOTED.
4. PROVIDE EQUAL TOLERANCE AT EACH END OF UPPER & LOWER CABINET RUNS.
5. ALL FIRE ALARM DEVICES & THERMOSTATS TO BE INSTALLED CLEAR OF MARKERBOARD AND TACKBOARDS, TYP.
6. COORDINATE INSTALLATION OF ALL ACOUSTICAL PANELS TO SCRIBE AROUND ALL MARKERBOARS & TACKBOARDS, TYP.

GENERAL KEYNOTES

1. HAND SINK, REGULAR
2. MARKER BD (TOP OF TRAY MAX 34" AFF). PROVIDE BACKING PLATES PER 13/6.05.
3. ACCESSIBLE COMPUTER STATIONS, NIC
4. NOT USED
5. ADJUSTABLE SHELVES (2)
6. RECESSED MOTORIZED PROJECTION SCREEN, SEE AUDIO VISUAL
7. PLAM COUNTERTOP
8. PLAM COUNTERTOP AND BACKSPLASH
9. PLAM UPPER CABINET
10. PLAM COUNTER W/ MANIKIN STORAGE BELOW
11. PLAM COUNTER / CHECK-IN STATION
12. PLAM FULL HEIGHT CABINET
13. PLAM ACCESSIBLE CABINET DOORS WITH KICK
14. PLAM UPPER CABINET(S) W/ WHITEBOARD FACE
15. PLAM UPPER CABINET(S) WITH MAIL BOXES
16. NOT USED
17. WALL MOUNT MEDIA BOX - SEE AUDIO VISUAL DWGS. MAX 4" PROJECTION OR MAX. 27" AFF TO BOTTOM, NIC.
18. NOT USED
19. NOT USED (2)
20. EQUIPMENT CLOSET
21. NOT USED
22. RUBBER BASE (2)
23. NOT USED
24. NOT USED
25. HOSPITAL BED WITH OVERBED TRAY TABLE, NIC
26. BEDSIDE TABLE/ NIGHT STAND, NIC
27. (E) RELOCATED "COSENT" HEADWALL W/ ELECT., O2, COMPRESSED AIR, & VACUUM
28. HAND SINK W/ ELECTRONIC SENSOR
29. HAND SINK SINK W/ FOOT PEDAL
30. NOT USED
31. NOT USED (2)
32. NOT USED
33. MED CART, NIC
34. AMBULANCE GURNEY, NIC
35. NOT USED
36. NOT USED (2)
37. NOT USED
38. 5.5 M MAN MANIKEN
39. DELIVERY BED, NIC
40. POST PARTUM BED, NIC
41. PEDIATRIC CRIB, NIC
42. PEDIATRIC MONITOR
43. CHILD CRIB, NIC
44. ISOLETTE, NIC
45. L/D WARMER, NIC
46. CRASH CART, NIC
47. FETAL MONITOR/ CART, NIC
48. COMPRESSOR, NIC
49. DESK, NIC
50. WARMER / BASSINET, NIC
51. SKELETON ON A STAND, NIC
52. COPIER / PRINTER, NIC
53. ICE MAKER, NIC
54. NOT USED
55. COMMERCIAL REFRIGERATOR, CFCI
56. COMMERICAL FREEZER, CFCI (2)
57. LOCKERS, CFCI. PROVIDE BACKING PLATE PER 20/6.05, FLOOR ANCHORAGE PER 18/6.05.
58. WASHER, FRONT-LOADING, CFCI
59. DRYER, FRONT-LOADING, CFCI
60. TACKBULLETIN BD (TOP OF TRAY MAX 34" AFF.). PROVIDE BACKING PLATES PER 13/6.05.
61. PLATING TABLE, ACCESSIBLE, NIC. PROVIDE 30" W. X 27" H. X 14" D. CLEAR SPACE.
62. NOT USED
63. MIRROR, CFCI (2)
64. NOT USED
65. DOUBLE SINK W/ GARBAGE DISPOSAL
66. INDUSTRIAL STAINLESS STEEL COUNTER AND BASE CABINETS
67. DRY ERASE MARKERBOARD PLAM UPPER CABINETS
68. NOT USED
69. PAPER TOWEL DISPENSER, OFCI (2)
70. NOT USED
71. NOT USED
72. PLAM UPPER CABINET(S) WITH WRITE-ON STRIP
73. PLAM UPPER CABINET W/ OPEN SHELVES
74. DISPLAY UNIT, SEE 6/6.03
75. NOT USED
76. MOVABLE METRO SHELVING, NIC (2)
77. NOT USED
78. NOT USED
79. NOT USED
80. CEILING MOUNTED CURTAIN & TRACK
81. NOT USED
82. NOT USED (2)
83. NOT USED
84. NOT USED
85. NOT USED
86. NOT USED
87. OVERHEAD LIGHT
88. TEACHING WALL, SEE 19/6.05 (2)
89. PULMONARY FUNCTION MACHINE, NIC
90. NOT USED
91. NOT USED
92. NOT USED
93. NOT USED (2)
94. O_2/AIR/VACUUM, OFCI
95. NOT USED
96. EXAM TABLE, NIC (2)
97. NOT USED
98. EKG CART, NIC
99. NOT USED
100. NOT USED (2)
101. FLAT PANEL DISPLAY WITH SPEAKER, SHEET AV4.03, NIC
102. WALL MOUNTED CAMERA, SEE SHEET AV4.03, NIC
103. NOT USED
104. SOAP DISPENSER, OFCI
105. NOT USED
106. AV EQUIPMENT RACK, NIC, SEE AV DRAWINGS (2)
107. NOT USED
108. NOT USED
109. NOT USED
110. ACOUSTICAL WALL PANELS
111. "COSENT" HEADWALL W/ ELECT., SIMULATED O2, COMPRESSED AIR, & VACUUM OUTLETS. MAX. 4" PROJECTION.
112. "CONTOUR" HEADWALL W/ ELECT., SIMULATED O2, COMPRESSED AIR, & VACUUM OUTLETS. MAX. 4" PROJECTION
113. NOT USED
114. NOT USED (1)
115. NOT USED
116. NOT USED (2)
117. NOT USED
118. TACKABLE WALLCOVERING, TWF-1 (2)
119. NOT USED
120. FREESTANDING OVERHEAD AND LOWER CABINET UNIT, SEE DETAIL 10/6.03
121. ACCESSIBLE LECTERN, N.I.C. MOBILE, ADJUSTABLE HEIGHT.
122. ALTERNATE #4: FUTURE METAL STUD / GYPSUM BOARD WALL, FUTURE CASEWORK, FUTURE EQUIPMENT, SHOWN DOTTED ON PLAN. SEE FOOD SERVICE DRAWINGS.
123. UNDER-STAIR LIGHT, SEE ELECTRICAL DWGS.
124. ALTERNATE #6: ADD SLOPED FLOOR AT PLANETARIUM. ADD FLOOR RAMPS AT PLANETARIUM VESTIBULES. ADD PLANETARIUM SEATING. CHANGE PLANETARIUM DOORS & FRAMES TO STANDARD HEIGHT. (BASE BID = FLAT FLOOR)
125. ACCESSIBLE DESK. PROVIDE 30" X 48" X 27" H. CLEAR SPACE AND ISA SYMBOL. (2)
126. PROVIDE 4 WHEELCHAIR SPACES, 33" X 48" MIN.
127. 10" DEEP NICHE FOR FLAT PANEL SCREEN. COORDINATE DIMENSIONS AND CONNECTIONS WITH OWNER. (2)

tBP
architecture
planning
interiors
management

LICENSED ARCHITECT
STATE OF CALIFORNIA

tBP/Architecture
5455 Wilshire Boulevard, Suite 1200
Los Angeles, CA 90036-4242
ph: 323. 556. 3788 fx: 323. 556. 3799

architect

consultant

IDENTIFICATION STAMP
DIV. OF THE STATE ARCHITECT
OFFICE OF REGULATION SERVICES
File No. 19-C11
Appl No. 03-112201
AC _____ FLS _____ SS _____
DATE _____

DSA Los Angeles Basin Regional Office
700 North Alameda Street, Suite 5-500
Los Angeles, California 90012
ph: 213/897-3995 fx: 213/897-3159/0726

agency

ANTELOPE VALLEY COLLEGE HEALTH & SCIENCE BUILDING

ANTELOPE VALLEY COMMUNITY COLLEGE DISTRICT
3041 WEST AVENUE K
LANCASTER, CA 93536-5426

owner

tBP project number : 20641.00
file name: A-0714-EP-NUTR.dwg
drawn by: JS checked by: MK
date: JULY 30, 2009 - 100% CD

Rev:	date:	description:
1	11/16/09	ADDENDUM #1
2	2/26/10	ADDENDUM #2

THIS DRAWING AND THE DESIGNS, DEPICTIONS, IDEAS AND OTHER INFORMATION CONTAINED HEREIN CONSTITUTE UNPUBLISHED WORK OF tBP/ARCHITECTURE AND SHALL REMAIN THE PROPERTY OF tBP/ARCHITECTURE IN PERPETUITY. NO PART THEREOF SHALL BE REPRODUCED, DISCLOSED, DISTRIBUTED, SOLD, PUBLISHED OR OTHERWISE USED IN ANY WAY WITHOUT THE ADVANCED EXPRESS WRITTEN CONSENT OF tBP/ARCHITECTURE.

drawing title:
ENLARGED NUTR/ FOOD PLAN & INT ELEVATIONS

drawing no.:
A-7.14

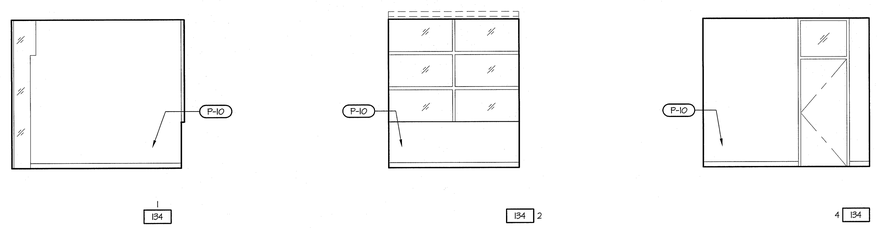

TYPICAL OFFICE INTERIOR ELEVATION
SCALE: 1/4" = 1'-0"
HS 134

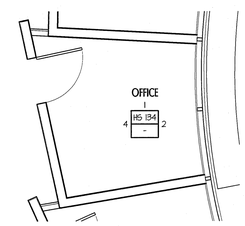

ENLARGED TYPICAL OFFICE PLAN
SCALE: 1/4" = 1'-0"
2

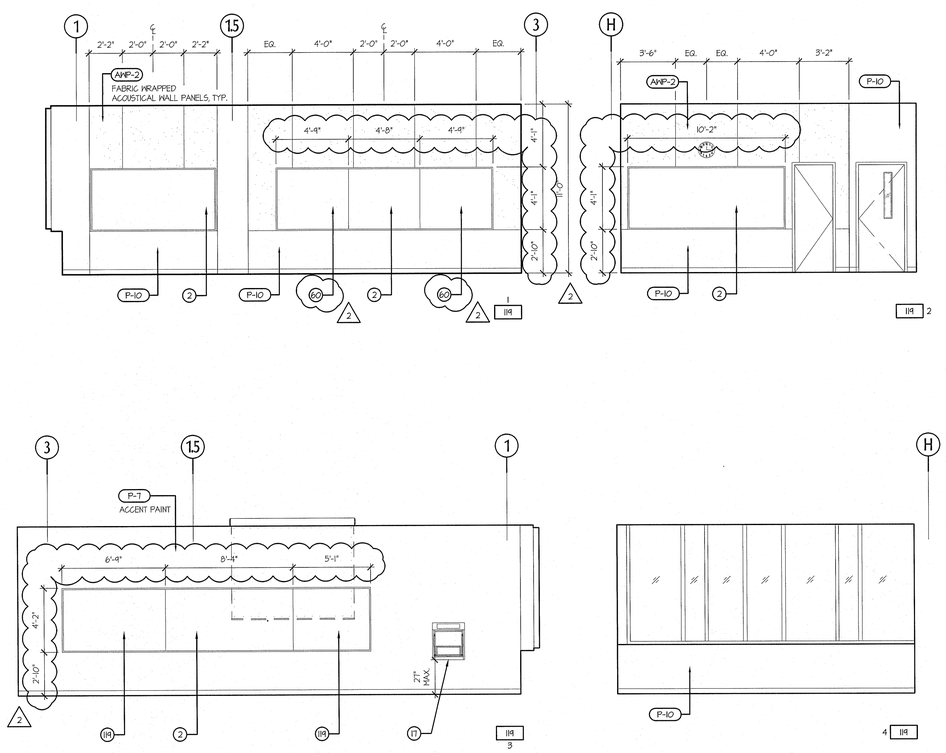

CLASSROOM INTERIOR ELEVATION
SCALE: 1/4" = 1'-0"
HS 119

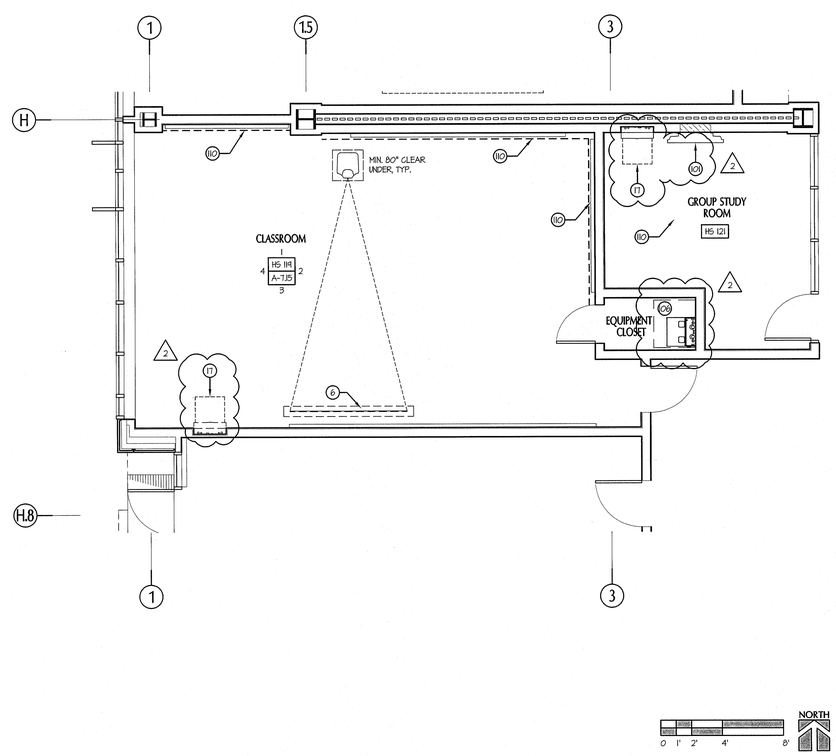

ENLARGED CLASSROOM PLAN
SCALE: 1/4" = 1'-0"
1

GENERAL NOTES

1. KEYNOTES ARE STANDARD FOR ALL INTERIOR ELEVATION AND ENLARGED PLAN DRAWINGS. NOT ALL NOTES USED ON A PARTICULAR SHEET.
2. PROVIDE ADJUSTABLE SHELVES AND LOGOS IN ALL CABINETRY.
3. ALL FIXTURES AND ACCESSORIES ARE ACCESSIBLE UNLESS OTHERWISE NOTED.
4. PROVIDE EQUAL TOLERANCE AT EACH END OF UPPER & LOWER CABINET RUNS.
5. ALL FIRE ALARM DEVICES & THERMOSTATS TO BE INSTALLED CLEAR OF MARKERBOARD AND TACKBOARDS, TYP.
6. COORDINATE INSTALLATION OF ALL ACOUSTICAL PANELS TO SCRIBE AROUND ALL MARKERBOARS & TACKBOARDS, TYP.

GENERAL KEYNOTES

1. HAND SINK, REGULAR
2. MARKER BD (TOP OF TRAY MAX 34" AFF). PROVIDE BACKING PLATES PER 13/6.05.
3. ACCESSIBLE COMPUTER STATIONS, NIC
4. NOT USED
5. ADJUSTABLE SHELVES
6. RECESSED MOTORIZED PROJECTION SCREEN, SEE AUDIO VISUAL
7. PLAM COUNTERTOP
8. PLAM COUNTERTOP AND BACKSPLASH
9. PLAM UPPER CABINET
10. PLAM COUNTER W/ MANIKIN STORAGE BELOW
11. PLAM COUNTER / CHECK-IN STATION
12. PLAM FULL HEIGHT CABINET
13. PLAM ACCESSIBLE CABINET DOORS WITH KICK
14. PLAM UPPER CABINET(S) W/ WHITEBOARD FACE
15. PLAM UPPER CABINET(S) WITH MAIL BOXES
16. NOT USED
17. WALL MOUNT MEDIA BOX - SEE AUDIO VISUAL DWGS. MAX 4" PROJECTION OR MAX. 21" AFF TO BOTTOM, NIC
18. NOT USED
19. NOT USED
20. EQUIPMENT CLOSET
21. NOT USED
22. RUBBER BASE
23. NOT USED
24. NOT USED
25. HOSPITAL BED WITH OVERBED TRAY TABLE, NIC
26. BEDSIDE TABLE/ NIGHT STAND, NIC
27. (E) RELOCATED "COSENT" HEADWALL W/ ELECT., O2, COMPRESSED AIR, & VACUUM
28. HAND SINK W/ ELECTRONIC SENSOR
29. HAND SINK SINK W/ FOOT PEDAL
30. NOT USED
31. NOT USED
32. NOT USED
33. MED CART, NIC
34. AMBULANCE GURNEY, NIC
35. NOT USED
36. NOT USED
37. NOT USED
38. 4.5 M MAN MANIKEN
39. DELIVERY BED, NIC
40. POST PARTUM BED, NIC
41. PEDIATRIC CRIB, NIC
42. PEDIATRIC MONITOR
43. CHILD CRIB, NIC
44. ISOLETTE, NIC
45. L/D WARMER, NIC
46. CRASH CART, NIC
47. FETAL MONITOR/ CART, NIC
48. COMPRESSOR, NIC
49. DESK, NIC
50. WARMER / BASSINET, NIC
51. SKELETON ON A STAND, NIC
52. COPIER / PRINTER, NIC
53. ICE MAKER, NIC
54. NOT USED
55. COMMERCIAL REFRIGERATOR, CFCI
56. COMMERICAL FREEZER, CFCI
57. LOCKERS, CFCI. PROVIDE BACKING PLATE PER 20/6.05, FLOOR ANCHORAGE PER 18/6.05.
58. WASHER, FRONT-LOADING, CFCI
59. DRYER, FRONT-LOADING, CFCI
60. TACK/BULLETIN BD (TOP OF TRAY MAX 34" AFF.). PROVIDE BACKING PLATES PER 13/6.05
61. PLATING TABLE, ACCESSIBLE, NIC. PROVIDE 30" H. X 27" H. X 19" D. CLEAR SPACE.
62. NOT USED
63. MIRROR, CFCI
64. NOT USED
65. DOUBLE SINK W/ GARBAGE DISPOSAL
66. INDUSTRIAL STAINLESS STEEL COUNTER AND BASE CABINETS
67. DRY ERASE MARKERBOARD PLAM UPPER CABINETS
68. NOT USED
69. PAPER TOWEL DISPENSER, CFCI
70. NOT USED
71. NOT USED
72. PLAM UPPER CABINET(S) WITH WRITE-ON STRIP
73. PLAM UPPER CABINET W/ OPEN SHELVES
74. DISPLAY UNIT, SEE 6/6.03
75. NOT USED
76. MOVABLE METRO SHELVING, NIC
77. NOT USED
78. NOT USED
79. NOT USED
80. CEILING MOUNTED CURTAIN & TRACK
81. NOT USED
82. NOT USED
83. NOT USED
84. NOT USED
85. NOT USED
86. NOT USED
87. OVERHEAD LIGHT
88. TEACHING WALL, SEE 18/6.05
89. PULMONARY FUNCTION MACHINE, NIC
90. NOT USED
91. NOT USED
92. NOT USED
93. NOT USED
94. O_2/AIR/VACUUM, CFCI
95. NOT USED
96. EXAM TABLE, NIC
97. NOT USED
98. EKG CART, NIC
99. NOT USED
100. NOT USED
101. FLAT PANEL DISPLAY WITH SPEAKER, SHEET AV4.03, NIC
102. WALL MOUNTED CAMERA, SEE SHEET AV4.03, NIC
103. NOT USED
104. SOAP DISPENSER, CFCI
105. NOT USED
106. AV EQUIPMENT RACK, NIC, SEE AV DRAWINGS
107. NOT USED
108. NOT USED
109. NOT USED
110. ACOUSTICAL WALL PANELS
111. "COSENT" HEADWALL W/ ELECT., SIMULATED O2, COMPRESSED AIR & VACUUM OUTLETS. MAX. 4" PROJECTION.
112. "CONTOUR" HEADWALL W/ ELECT., SIMULATED O2, COMPRESSED AIR, & VACUUM OUTLETS MAX 4" PROJECTION
113. NOT USED
114. NOT USED
115. NOT USED
116. NOT USED
117. NOT USED
118. TACKABLE WALLCOVERING, TWP-1
119. NOT USED
120. FREESTANDING OVERHEAD AND LOWER CABINET UNIT, SEE DETAIL 10/6.03
121. ACCESSIBLE LECTERN, N.I.C. MOBILE, ADJUSTABLE HEIGHT.
122. ALTERNATE #4: FUTURE METAL STUD / GYPSUM BOARD WALL, FUTURE CASEWORK, FUTURE EQUIPMENT, SHOWN DOTTED ON PLAN. SEE FOOD SERVICE DRAWINGS.
123. UNDER-STAIR LIGHT, SEE ELECTRICAL DWGS.
124. ALTERNATE #6: ADD SLOPED FLOOR AT PLANETARIUM. ADD FLOOR RAMPS AT PLANETARIUM VESTIBULES. ADD PLANETARIUM SEATING. CHANGE PLANETARIUM DOORS & FRAMES TO STANDARD HEIGHT. (BASE BID = FLAT FLOOR)
125. ACCESSIBLE DESK. PROVIDE 30" X 48" X 27" H. CLEAR SPACE AND ISA SYMBOL.
126. PROVIDE 4 WHEELCHAIR SPACES, 33" X 48" MIN.
127. 10" DEEP NICHE FOR FLAT PANEL SCREEN. COORDINATE DIMENSIONS AND CONNECTIONS WITH OWNER.

tBP
architecture
planning
interiors
management

LICENSED ARCHITECT
STATE OF CALIFORNIA

tBP/Architecture
5455 Wilshire Boulevard, Suite 1200
Los Angeles, CA 90036-4242
ph: 323. 556. 3788 fx: 323. 556. 3799
architect

consultant

IDENTIFICATION STAMP
DIV. OF THE STATE ARCHITECT
OFFICE OF REGULATION SERVICES
File No. 19-C11
Appl No. 03-112201
AC _____ FLS _____ SS _____
DATE _____

DSA Los Angeles Basin Regional Office
700 North Alameda Street, Suite 5-500
Los Angeles, California 90012
ph: 213/897-3995 fx: 213/897-3159/0726
agency

owner

ANTELOPE VALLEY COLLEGE HEALTH & SCIENCE BUILDING

ANTELOPE VALLEY COMMUNITY COLLEGE DISTRICT
3041 WEST AVENUE K
LANCASTER, CA 93536-5426

tBP project number : 206411.00
file name: A-0715-EP-NUTR-CR.dwg
drawn by: JS checked by: MK
date: JULY 30, 2009 - 100% CD

Rev:	date:	description:
2	2/26/10	ADDENDUM #2

THIS DRAWING AND THE DESIGNS, DEPICTIONS, IDEAS AND OTHER INFORMATION CONTAINED HEREIN CONSTITUTE UNPUBLISHED WORK OF tBP/ARCHITECTURE AND SHALL REMAIN THE PROPERTY OF tBP/ARCHITECTURE. IN PERPETUITY, NO PART THEREOF SHALL BE REPRODUCED, DISCLOSED, DISTRIBUTED, SOLD, PUBLISHED OR OTHERWISE USED IN ANY WAY WITHOUT THE ADVANCED EXPRESS WRITTEN CONSENT OF tBP/ARCHITECTURE.

drawing title:
ENLARGED NUTR & CR PLAN & INT ELEVATIONS

drawing no.:
A-7.15
drawing of

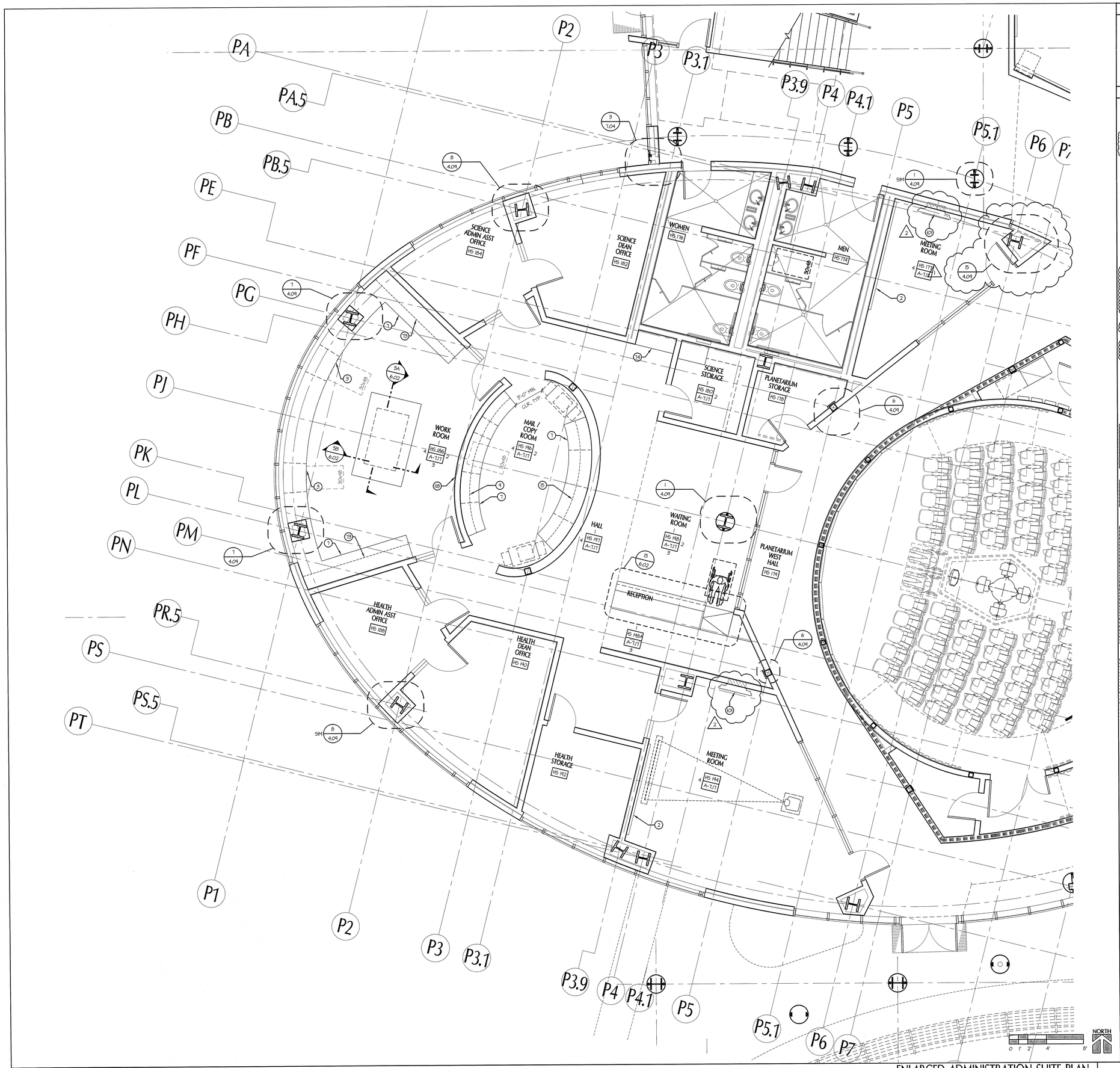

ENLARGED ADMINISTRATION SUITE PLAN

SCALE: 1/4" = 1'-0"

1

GENERAL NOTES

1. KEYNOTES ARE STANDARD FOR ALL INTERIOR ELEVATION AND ENLARGED PLAN DRAWINGS. NOT ALL NOTES USED ON A PARTICULAR SHEET.
2. PROVIDE ADJUSTABLE SHELVES AND LOCKS IN ALL CABINETRY.
3. ALL FIXTURES AND ACCESSORIES ARE ACCESSIBLE UNLESS OTHERWISE NOTED.
4. PROVIDE EQUAL TOLERANCE AT EACH END OF UPPER & LOWER CABINET RUNS.
5. ALL FIRE ALARM DEVICES & THERMOSTATS TO BE INSTALLED CLEAR OF MARKERBOARD AND TACKBOARDS, TYP.
6. COORDINATE INSTALLATION OF ALL ACOUSTICAL PANELS TO SCRIBE AROUND ALL MARKERBOARS & TACKBOARDS, TYP.

GENERAL KEYNOTES

1. HAND SINK, REGULAR
2. MARKER BD (TOP OF TRAY MAX 34" AFF). PROVIDE BACKING PLATES PER 13/6.05.
3. ACCESSIBLE COMPUTER STATIONS, NIC
4. NOT USED
5. ADJUSTABLE SHELVES (2)
6. RECESSED MOTORIZED PROJECTION SCREEN, SEE AUDIO VISUAL
7. PLAM COUNTERTOP
8. PLAM COUNTERTOP AND BACKSPLASH
9. PLAM UPPER CABINET
10. PLAM COUNTER W/ MANIKIN STORAGE BELOW
11. PLAM COUNTER / CHECK-IN STATION
12. PLAM FULL HEIGHT CABINET
13. PLAM ACCESSIBLE CABINET DOORS WITH KICK
14. PLAM UPPER CABINET(S) W/ WHITEBOARD FACE
15. PLAM UPPER CABINET(S) WITH MAIL BOXES
16. NOT USED
17. WALL MOUNT MEDIA BOX - SEE AUDIO VISUAL DWGS. MAX 4" PROJECTION OR MAX. 21" AFF TO BOTTOM, NIC
18. NOT USED
19. NOT USED (2)
20. EQUIPMENT CLOSET
21. NOT USED (2)
22. RUBBER BASE
23. NOT USED
24. NOT USED (2)
25. HOSPITAL BED WITH OVERBED TRAY TABLE, NIC
26. BEDSIDE TABLE/ NIGHT STAND, NIC
27. (E) RELOCATED "COSENT" HEADWALL W/ ELECT., O2, COMPRESSED AIR, & VACUUM
28. HAND SINK W/ ELECTRONIC SENSOR
29. HAND SINK SINK W/ FOOT PEDAL
30. NOT USED
31. NOT USED
32. NOT USED
33. MED CART, NIC
34. AMBULANCE GURNEY, NIC
35. NOT USED
36. NOT USED
37. NOT USED (2)
38. 1.5 M MAN MANIKEN
39. DELIVERY BED, NIC
40. POST PARTUM BED, NIC
41. PEDIATRIC CRIB, NIC
42. PEDIATRIC MONITOR
43. CHILD CRIB, NIC
44. ISOLETTE, NIC
45. L/D WARMER, NIC
46. CRASH CART, NIC
47. FETAL MONITOR/ CART, NIC
48. COMPRESSOR, NIC
49. DESK, NIC
50. WARMER / BASSINET, NIC
51. SKELETON ON A STAND, NIC
52. COPIER / PRINTER, NIC
53. ICE MAKER, NIC
54. NOT USED
55. COMMERCIAL REFRIGERATOR, CFCI
56. COMMERCIAL FREEZER, CFCI (2)
57. LOCKERS, CFCI. PROVIDE BACKING PLATE PER 20/6.05, FLOOR ANCHORAGE PER 18/6.05.
58. WASHER, FRONT-LOADING, CFCI
59. DRYER, FRONT-LOADING, CFCI
60. TACK/BULLETIN BD (TOP OF TRAY MAX 34" AFF.). PROVIDE BACKING PLATES PER 13/6.05.
61. PLATING TABLE, ACCESSIBLE, NIC. PROVIDE 30" H. X 27" H. X 19" D. CLEAR SPACE.
62. NOT USED
63. MIRROR, CFCI (2)
64. NOT USED
65. DOUBLE SINK W/ GARBAGE DISPOSAL
66. INDUSTRIAL STAINLESS STEEL COUNTER AND BASE CABINETS
67. DRY ERASE MARKERBOARD PLAM UPPER CABINETS
68. NOT USED
69. PAPER TOWEL DISPENSER, OFCI (2)
70. NOT USED
71. NOT USED
72. PLAM UPPER CABINET(S) WITH WRITE-ON STRIP
73. PLAM UPPER CABINET W/ OPEN SHELVES
74. DISPLAY UNIT, SEE 6/6.03
75. NOT USED
76. MOVABLE METRO SHELVING, NIC (2)
77. NOT USED
78. NOT USED
79. NOT USED
80. CEILING MOUNTED CURTAIN & TRACK
81. NOT USED
82. NOT USED (2)
83. NOT USED
84. NOT USED
85. NOT USED
86. NOT USED
87. OVERHEAD LIGHT
88. TEACHING WALL, SEE 18/6.05 (2)
89. PULMONARY FUNCTION MACHINE, NIC
90. NOT USED
91. NOT USED
92. NOT USED
93. NOT USED (2)
94. O2/AIR/VACUUM, OFCI
95. NOT USED
96. EXAM TABLE, NIC (2)
97. NOT USED
98. EKG CART, NIC
99. NOT USED
100. NOT USED (2)
101. FLAT PANEL DISPLAY WITH SPEAKER, SHEET AV4.03, NIC
102. WALL MOUNTED CAMERA, SEE SHEET AV4.03, NIC
103. NOT USED
104. SOAP DISPENSER, OFCI
105. NOT USED
106. AV EQUIPMENT RACK, NIC, SEE AV DRAWINGS
107. NOT USED
108. NOT USED
109. NOT USED
110. ACOUSTICAL WALL PANELS
111. "COSENT" HEADWALL W/ ELECT., SIMULATED O2, COMPRESSED AIR & VACUM OUTLETS. MAX. 4" PROJECTION.
112. "CONTOUR" HEADWALL W/ ELECT., SIMULATED O2, COMPRESSED AIR, & VACUUM OUTLETS. MAX. 4" PROJECTION
113. NOT USED (1)
114. NOT USED
115. NOT USED (2)
116. NOT USED
117. NOT USED
118. TACKABLE WALLCOVERING, THP-1 (2)
119. NOT USED
120. FREESTANDING OVERHEAD AND LOWER CABINET UNIT, SEE DETAIL 10/6.03
121. ACCESSIBLE LECTERN, N.I.C. MOBILE, ADJUSTABLE HEIGHT.
122. ALTERNATE #4: FUTURE METAL STUD / GYPSUM BOARD WALL, FUTURE CASEWORK, FUTURE EQUIPMENT, SHOWN DOTTED ON PLAN. SEE FOOD SERVICE DRAWINGS.
123. UNDER-STAIR LIGHT, SEE ELECTRICAL DWGS.
124. ALTERNATE #6: ADD SLOPED FLOOR AT PLANETARIUM. ADD FLOOR RAMPS AT PLANETARIUM VESTIBULES. ADD PLANETARIUM SEATING. CHANGE PLANETARIUM DOORS & FRAMES TO STANDARD HEIGHT. (BASE BID = FLAT FLOOR)
125. ACCESSIBLE DESK. PROVIDE 30" X 48" X 27" H. CLEAR SPACE AND ISA SYMBOL.
126. PROVIDE 4 WHEELCHAIR SPACES, 33" X 48" MIN.
127. 10" DEEP NICHE FOR FLAT PANEL SCREEN. COORDINATE DIMENSIONS AND CONNECTIONS WITH OWNER. (2)

tBP
architecture
planning
interiors
management

LICENSED ARCHITECT
NICK TAN-JONG
NO. C28224
REG. C.S.I.
STATE OF CALIFORNIA

tBP/Architecture
5455 Wilshire Boulevard, Suite 1200
Los Angeles, CA 90036-4242
ph: 323. 556. 3788 fx: 323. 556. 3799

architect

consultant

IDENTIFICATION STAMP
DIV. OF THE STATE ARCHITECT
OFFICE OF REGULATION SERVICES
File No. 19-C11
Appl No. 03-112201
AC _____ FLS _____ SS _____
DATE _____

DSA Los Angeles Basin Regional Office
700 North Alameda Street, Suite 5-500
Los Angeles, California 90012
ph: 213/897-3995 fx: 213/897-3159/0726

agency

ANTELOPE VALLEY COLLEGE HEALTH & SCIENCE BUILDING

ANTELOPE VALLEY COMMUNITY COLLEGE DISTRICT
3041 WEST AVENUE K
LANCASTER, CA 93536-5426

owner

tBP project number : 206411.00

file name: A-0116-EP-ADM.dwg

drawn by: JS/BDV checked by: MK

date: JULY 30, 2009 - 100% CD

Rev:	date:	description:
1	11/16/09	ADDENDUM #1
2	2/26/10	ADDENDUM #2

THIS DRAWING AND THE DESIGNS, DEPICTIONS, IDEAS AND OTHER INFORMATION CONTAINED HEREIN CONSTITUTE UNPUBLISHED WORK OF tBP/ARCHITECTURE AND SHALL REMAIN THE PROPERTY OF tBP/ARCHITECTURE IN PERPETUITY. NO PART THEREOF SHALL BE REPRODUCED, DISCLOSED, DISTRIBUTED, SOLD, PUBLISHED OR OTHERWISE USED IN ANY WAY WITHOUT THE ADVANCED EXPRESS WRITTEN CONSENT OF tBP/ARCHITECTURE.

drawing title:
ENLARGED ADMIN SUITE PLAN

drawing no.:
A-7.16

drawing of

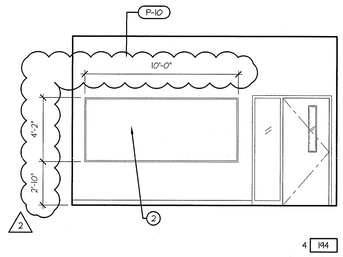

MEETING ROOM INTERIOR ELEVATION HS 194
SCALE: 1/4" = 1'-0"

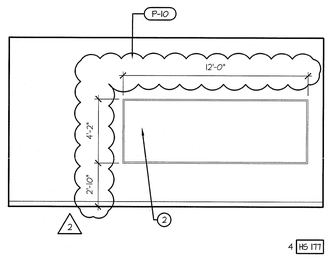

MEETING ROOM INTERIOR ELEVATION HS 177
SCALE: 1/4" = 1'-0"

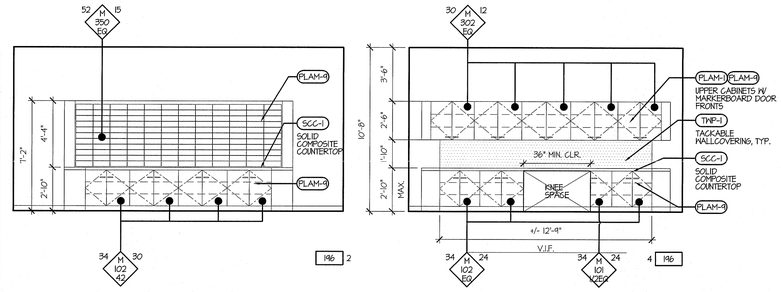

MAIL/COPY ROOM INTERIOR ELEVATION HS 196
SCALE: 1/4" = 1'-0"

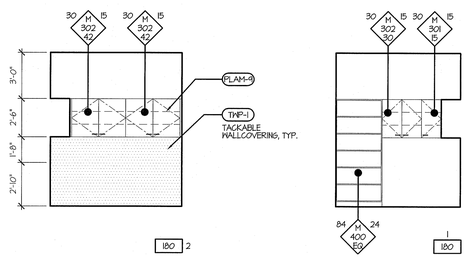

SCIENCE STORAGE INTERIOR ELEVATION HS 180
SCALE: 1/4" = 1'-0"

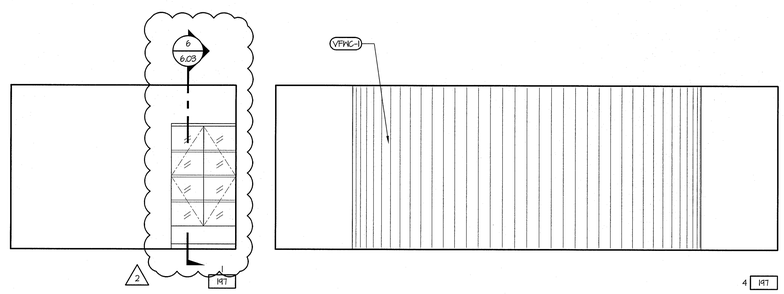

HALL INTERIOR ELEVATION HS 197
SCALE: 1/4" = 1'-0"

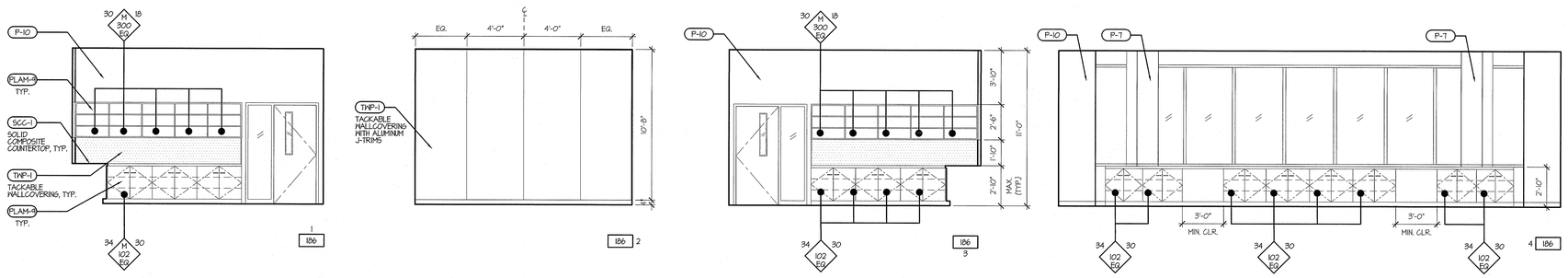

WORKROOM INTERIOR ELEVATION HS 186
SCALE: 1/4" = 1'-0"

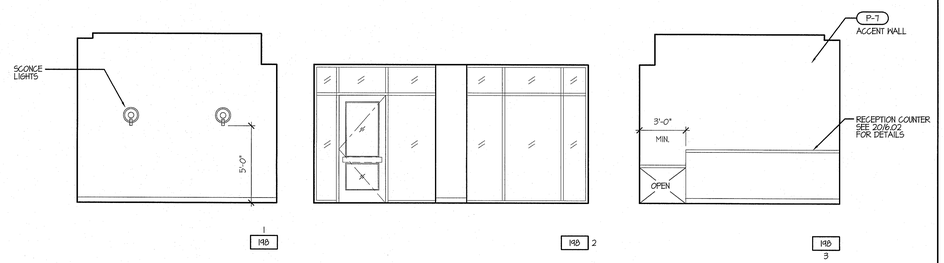

WAITING ROOM INTERIOR ELEVATION HS 198
SCALE: 1/4" = 1'-0"

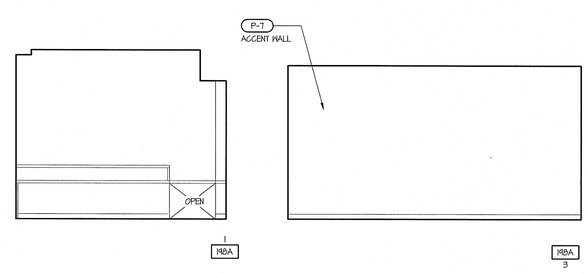

RECEPTION INTERIOR ELEVATION HS 198A
SCALE: 1/4" = 1'-0"

GENERAL NOTES

1. KEYNOTES ARE STANDARD FOR ALL INTERIOR ELEVATION AND ENLARGED PLAN DRAWINGS. NOT ALL NOTES USED ON A PARTICULAR SHEET.
2. PROVIDE ADJUSTABLE SHELVES AND LOCKS IN ALL CABINETRY.
3. ALL FIXTURES AND ACCESSORIES ARE ACCESSIBLE UNLESS OTHERWISE NOTED.
4. PROVIDE EQUAL TOLERANCE AT EACH END OF UPPER & LOWER CABINET RUNS.
5. ALL FIRE ALARM DEVICES & THERMOSTATS TO BE INSTALLED CLEAR OF MARKERBOARD AND TACKBOARDS, TYP.
6. COORDINATE INSTALLATION OF ALL ACOUSTICAL PANELS TO SCRIBE AROUND ALL MARKERBOARDS & TACKBOARDS, TYP.

GENERAL KEYNOTES

1. HAND SINK, REGULAR
2. MARKER BD (TOP OF TRAY MAX 34" AFF). PROVIDE BACKING PLATES PER 13/6.05.
3. ACCESSIBLE COMPUTER STATIONS, NIC
4. NOT USED
5. ADJUSTABLE SHELVES
6. RECESSED MOTORIZED PROJECTION SCREEN, SEE AUDIO VISUAL
7. PLAM COUNTERTOP
8. PLAM COUNTERTOP AND BACKSPLASH
9. PLAM UPPER CABINET
10. PLAM COUNTER W/ MANIKIN STORAGE BELOW
11. PLAM COUNTER / CHECK-IN STATION
12. PLAM FULL HEIGHT CABINET
13. PLAM ACCESSIBLE CABINET DOORS WITH KICK
14. PLAM UPPER CABINET(S) W/ WHITEBOARD FACE
15. PLAM UPPER CABINET(S) WITH MAIL BOXES
16. NOT USED
17. WALL MOUNT MEDIA BOX - SEE AUDIO VISUAL DWGS. MAX 4" PROJECTION OR MAX. 27" AFF TO BOTTOM, NIC.
18. NOT USED
19. NOT USED
20. EQUIPMENT CLOSET
21. NOT USED
22. RUBBER BASE
23. NOT USED
24. NOT USED
25. HOSPITAL BED WITH OVERBED TRAY TABLE, NIC
26. BEDSIDE TABLE/ NIGHT STAND, NIC
27. (E) RELOCATED "COSENT" HEADWALL W/ ELECT., O2, COMPRESSED AIR, & VACUUM
28. HAND SINK W/ ELECTRONIC SENSOR
29. HAND SINK SINK W/ FOOT PEDAL
30. NOT USED
31. NOT USED
32. NOT USED
33. MED CART, NIC
34. AMBULANCE GURNEY, NIC
35. NOT USED
36. NOT USED
37. NOT USED
38. 95 %TILE MAN MANIKEN
39. DELIVERY BED, NIC
40. POST PARTUM BED, NIC
41. PEDIATRIC CRIB, NIC
42. PEDIATRIC MONITOR
43. CHILD CRIB, NIC
44. ISOLETTE, NIC
45. L/D WARMER, NIC
46. CRASH CART, NIC
47. FETAL MONITOR/ CART, NIC
48. COMPRESSOR, NIC
49. DESK, NIC
50. WARMER / BASSINET, NIC
51. SKELETON ON A STAND, NIC
52. COPIER / PRINTER, NIC
53. ICE MAKER, NIC
54. NOT USED
55. COMMERCIAL REFRIGERATOR, CFCI
56. COMMERICAL FREEZER, CFCI
57. LOCKERS, CFCI. PROVIDE BACKING PLATE PER 20/6.05, FLOOR ANCHORAGE PER 18/6.05.
58. WASHER, FRONT-LOADING, CFCI
59. DRYER, FRONT-LOADING, CFCI
60. TACK/BULLETIN BD (TOP OF TRAY MAX 34" AFF.). PROVIDE BACKING PLATES PER 13/6.05.
61. PLATING TABLE, ACCESSIBLE, NIC. PROVIDE 30" H. X 27" H. X 14" D. CLEAR SPACE.
62. NOT USED
63. MIRROR, CFCI
64. NOT USED
65. DOUBLE SINK W/ GARBAGE DISPOSAL
66. INDUSTRIAL STAINLESS STEEL COUNTER AND BASE CABINETS
67. DRY ERASE MARKERBOARD PLAM UPPER CABINETS
68. NOT USED
69. PAPER TOWEL DISPENSER, CFCI
70. NOT USED
71. NOT USED
72. PLAM UPPER CABINET(S) WITH WRITE-ON STRIP
73. PLAM UPPER CABINET W/ OPEN SHELVES
74. DISPLAY UNIT, SEE 6/6.03
75. NOT USED
76. MOVABLE METRO SHELVING, NIC
77. NOT USED
78. NOT USED
79. NOT USED
80. CEILING MOUNTED CURTAIN & TRACK
81. NOT USED
82. NOT USED
83. NOT USED
84. NOT USED
85. NOT USED
86. NOT USED
87. OVERHEAD LIGHT
88. TEACHING WALL, SEE 18/6.05
89. PULMONARY FUNCTION MACHINE, NIC
90. NOT USED
91. NOT USED
92. NOT USED
93. NOT USED
94. O_2/AIR/VACUUM, CFCI
95. NOT USED
96. EXAM TABLE, NIC
97. NOT USED
98. EKG CART, NIC
99. NOT USED
100. NOT USED
101. FLAT PANEL DISPLAY WITH SPEAKER, SHEET AV4.03, NIC
102. WALL MOUNTED CAMERA, SEE SHEET AV4.03, NIC
103. NOT USED
104. SOAP DISPENSER, CFCI
105. NOT USED
106. AV EQUIPMENT RACK, NIC, SEE AV DRAWINGS
107. NOT USED
108. NOT USED
109. NOT USED
110. ACOUSTICAL WALL PANELS
111. "COSENT" HEADWALL W/ ELECT., SIMULATED O2, COMPRESSED AIR & VACUUM OUTLETS. MAX. 4" PROJECTION.
112. "CONTOUR" HEADWALL W/ ELECT., SIMULATED O2, COMPRESSED AIR, & VACUUM OUTLETS MAX. 4" PROJECTION
113. NOT USED
114. NOT USED
115. NOT USED
116. NOT USED
117. NOT USED
118. TACKABLE WALLCOVERING, TNP-1
119. NOT USED
120. FREESTANDING OVERHEAD AND LOWER CABINET UNIT, SEE DETAIL 10/6.03
121. ACCESSIBLE LECTERN, N.I.C. MOBILE, ADJUSTABLE HEIGHT.
122. ALTERNATE #4: FUTURE METAL STUD / GYPSUM BOARD WALL, FUTURE CASEWORK, FUTURE EQUIPMENT, SHOWN DOTTED ON PLAN. SEE FOOD SERVICE DRAWINGS.
123. UNDER-STAIR LIGHT, SEE ELECTRICAL DWGS.
124. ALTERNATE #6: ADD SLOPED FLOOR AT PLANETARIUM. ADD FLOOR RAMPS AT PLANETARIUM VESTIBULES. ADD PLANETARIUM SEATING. CHANGE PLANETARIUM DOORS & FRAMES TO STANDARD HEIGHT. (BASE BID = FLAT FLOOR)
125. ACCESSIBLE DESK. PROVIDE 30" X 48" X 27" H. CLEAR SPACE AND ISA SYMBOL.
126. PROVIDE 4 WHEELCHAIR SPACES, 33" X 48" MIN.
127. 10" DEEP NICHE FOR FLAT PANEL SCREEN. COORDINATE DIMENSIONS AND CONNECTIONS WITH OWNER.

tBP
architecture
planning
interiors
management

LICENSED ARCHITECT
STATE OF CALIFORNIA

tBP/Architecture
5455 Wilshire Boulevard, Suite 1200
Los Angeles, CA 90036-4242
ph: 323. 556. 3788 fx: 323. 556. 3799

architect

consultant

IDENTIFICATION STAMP
DIV. OF THE STATE ARCHITECT
OFFICE OF REGULATION SERVICES
File No. 19-C11
Appl No. 03-112201
AC ____ RS ____ SS ____
DATE ____

DSA Los Angeles Basin Regional Office
700 North Alameda Street, Suite 5-500
Los Angeles, California 90012
ph: 213/897-3995 fx: 213/897-3159/0726

agency

ANTELOPE VALLEY COLLEGE HEALTH & SCIENCE BUILDING

ANTELOPE VALLEY COMMUNITY COLLEGE DISTRICT
3041 WEST AVENUE K
LANCASTER, CA 93536-5426

owner

tBP project number : 20641.00
file name: A-0711-EP-ADM.dwg
drawn by: JS/EDV checked by: MK
date: JULY 30, 2009 - 100% CD

Rev:	date:	description:
2	2/26/10	ADDENDUM #2

THIS DRAWING AND THE DESIGNS, DEPICTIONS, IDEAS AND OTHER INFORMATION CONTAINED HEREIN CONSTITUTE UNPUBLISHED WORK OF tBP/ARCHITECTURE AND SHALL REMAIN THE PROPERTY OF tBP/ARCHITECTURE IN PERPETUITY. NO PART THEREOF SHALL BE REPRODUCED, DISCLOSED, DISTRIBUTED, SOLD, PUBLISHED OR OTHERWISE USED IN ANY WAY WITHOUT THE ADVANCED EXPRESS WRITTEN CONSENT OF tBP/ARCHITECTURE.

drawing title:
ENLARGED ADMIN SUITE INTERIOR ELEVATIONS

drawing no.:
A-7.17
drawing of

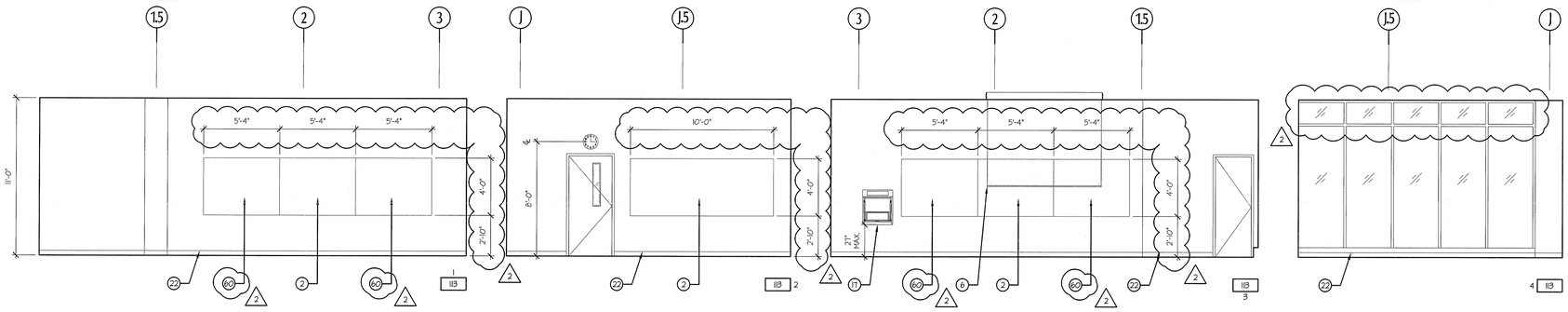

CLASSROOM INTERIOR ELEVATION

SCALE: 1/4" = 1'-0"

HS 113

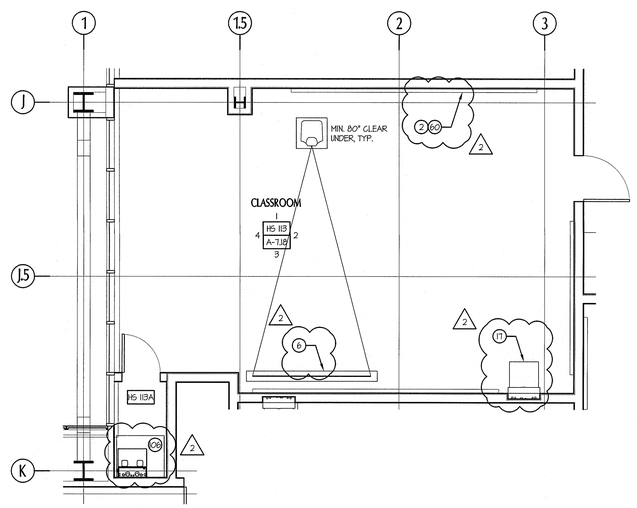

ENLARGED CLASSROOM PLAN

SCALE: 1/4" = 1'-0"

1

NORTH

0 1' 2' 4' 8'

GENERAL NOTES

1. KEYNOTES ARE STANDARD FOR ALL INTERIOR ELEVATION AND ENLARGED PLAN DRAWINGS. NOT ALL NOTES USED ON A PARTICULAR SHEET.
2. PROVIDE ADJUSTABLE SHELVES AND LOCKS IN ALL CABINETRY.
3. ALL FIXTURES AND ACCESSORIES ARE ACCESSIBLE UNLESS OTHERWISE NOTED.
4. PROVIDE EQUAL TOLERANCE AT EACH END OF UPPER & LOWER CABINET RUNS.
5. ALL FIRE ALARM DEVICES & THERMOSTATS TO BE INSTALLED CLEAR OF MARKERBOARD AND TACKBOARDS, TYP.
6. COORDINATE INSTALLATION OF ALL ACOUSTICAL PANELS TO SCRIBE AROUND ALL MARKERBOARS & TACKBOARDS, TYP.

GENERAL KEYNOTES

1. HAND SINK, REGULAR
2. MARKER BD (TOP OF TRAY MAX 34" AFF). PROVIDE BACKING PLATES PER 13/6.05.
3. ACCESSIBLE COMPUTER STATIONS, NIC
4. NOT USED
5. ADJUSTABLE SHELVES
6. RECESSED MOTORIZED PROJECTION SCREEN, SEE AUDIO VISUAL
7. PLAM COUNTERTOP
8. PLAM COUNTERTOP AND BACKSPLASH
9. PLAM UPPER CABINET
10. PLAM COUNTER W/ MANIKIN STORAGE BELOW
11. PLAM COUNTER / CHECK-IN STATION
12. PLAM FULL HEIGHT CABINET
13. PLAM ACCESSIBLE CABINET DOORS WITH KICK
14. PLAM UPPER CABINET(S) W/ WHITEBOARD FACE
15. PLAM UPPER CABINET(S) WITH MAIL BOXES
16. NOT USED
17. WALL MOUNT MEDIA BOX - SEE AUDIO VISUAL DWGS. MAX 4" PROJECTION OR MAX. 21" AFF TO BOTTOM, NIC
18. NOT USED
19. NOT USED
20. EQUIPMENT CLOSET
21. NOT USED
22. RUBBER BASE
23. NOT USED
24. NOT USED
25. HOSPITAL BED WITH OVERBED TRAY TABLE, NIC
26. BEDSIDE TABLE/ NIGHT STAND, NIC
27. (E) RELOCATED "COSENT" HEADWALL W/ ELECT., O2, COMPRESSED AIR, & VACUUM
28. HAND SINK W/ ELECTRONIC SENSOR
29. HAND SINK SINK W/ FOOT PEDAL
30. NOT USED
31. NOT USED
32. NOT USED
33. MED CART, NIC
34. AMBULANCE GURNEY, NIC
35. NOT USED
36. NOT USED
37. NOT USED
38. 4.5 H MAN MANIKEN
39. DELIVERY BED, NIC
40. POST PARTUM BED, NIC
41. PEDIATRIC CRIB, NIC
42. PEDIATRIC MONITOR
43. CHILD CRIB, NIC
44. ISOLETTE, NIC
45. L/D WARMER, NIC
46. CRASH CART, NIC
47. FETAL MONITOR/ CART, NIC
48. COMPRESSOR, NIC
49. DESK, NIC
50. WARMER / BASSINET, NIC
51. SKELETON ON A STAND, NIC
52. COPIER / PRINTER, NIC
53. ICE MAKER, NIC
54. NOT USED
55. COMMERCIAL REFRIGERATOR, CFCI
56. COMMERICAL FREEZER, CFCI
57. LOCKERS, CFCI. PROVIDE BACKING PLATE PER 20/6.05, FLOOR ANCHORAGE PER 18/6.05.
58. WASHER, FRONT-LOADING, CFCI
59. DRYER, FRONT-LOADING, CFCI
60. TACK/BULLETIN BD (TOP OF TRAY MAX 34" AFF.). PROVIDE BACKING PLATES PER 13/6.05
61. PLATING TABLE, ACCESSIBLE, NIC. PROVIDE 30" H. X 21" H. X 19" D. CLEAR SPACE.
62. NOT USED
63. MIRROR, CFCI
64. NOT USED
65. DOUBLE SINK W/ GARBAGE DISPOSAL
66. INDUSTRIAL STAINLESS STEEL COUNTER AND BASE CABINETS
67. DRY ERASE MARKERBOARD PLAM UPPER CABINETS
68. NOT USED
69. PAPER TOWEL DISPENSER, OFCI
70. NOT USED
71. NOT USED
72. PLAM UPPER CABINET(S) WITH WRITE-ON STRIP
73. PLAM UPPER CABINET W/ OPEN SHELVES
74. DISPLAY UNIT, SEE 6/6.03
75. NOT USED
76. MOVABLE METRO SHELVING, NIC
77. NOT USED
78. NOT USED
79. NOT USED
80. CEILING MOUNTED CURTAIN & TRACK
81. NOT USED
82. NOT USED
83. NOT USED
84. NOT USED
85. NOT USED
86. NOT USED
87. OVERHEAD LIGHT
88. TEACHING WALL, SEE 18/6.05
89. PULMONARY FUNCTION MACHINE, NIC
90. NOT USED
91. NOT USED
92. NOT USED
93. NOT USED
94. O_2/AIR/VACUUM, OFCI
95. NOT USED
96. EXAM TABLE, NIC
97. NOT USED
98. EKG CART, NIC
99. NOT USED
100. NOT USED
101. FLAT PANEL DISPLAY WITH SPEAKER, SHEET AV4.03, NIC
102. WALL MOUNTED CAMERA, SEE SHEET AV4.03, NIC
103. NOT USED
104. SOAP DISPENSER, OFCI
105. NOT USED
106. AV EQUIPMENT RACK, NIC, SEE AV DRAWINGS
107. NOT USED
108. NOT USED
109. NOT USED
110. ACOUSTICAL WALL PANELS
111. "COSENT" HEADWALL W/ ELECT., SIMULATED O2, COMPRESSED AIR & VACUUM OUTLETS. MAX. 4" PROJECTION.
112. "CONTOUR" HEADWALL W/ ELECT., SIMULATED O2, COMPRESSED AIR, & VACUUM OUTLETS MAX. 4" PROJECTION
113. NOT USED
114. NOT USED
115. NOT USED
116. NOT USED
117. NOT USED
118. TACKABLE WALLCOVERING, TWP-1
119. NOT USED
120. FREESTANDING OVERHEAD AND LOWER CABINET UNIT, SEE DETAIL 10/6.03
121. ACCESSIBLE LECTERN, N.I.C. MOBILE, ADJUSTABLE HEIGHT.
122. ALTERNATE #4: FUTURE METAL STUD / GYPSUM BOARD WALL, FUTURE CASEWORK, FUTURE EQUIPMENT, SHOWN DOTTED ON PLAN. SEE FOOD SERVICE DRAWINGS.
123. UNDER-STAIR LIGHT, SEE ELECTRICAL DWGS.
124. ALTERNATE #6: ADD SLOPED FLOOR AT PLANETARIUM. ADD FLOOR RAMPS AT PLANETARIUM VESTIBULES. ADD PLANETARIUM SEATING. CHANGE PLANETARIUM DOORS & FRAMES TO STANDARD HEIGHT. (BASE BID = FLAT FLOOR)
125. ACCESSIBLE DESK. PROVIDE 30" X 48" X 27" H. CLEAR SPACE AND ISA SYMBOL.
126. PROVIDE 4 WHEELCHAIR SPACES, 33" X 48" MIN.
127. 10" DEEP NICHE FOR FLAT PANEL SCREEN. COORDINATE DIMENSIONS AND CONNECTIONS WITH OWNER.
128. PLANETARIUM PROJECTOR, PLATFORM, GUARD RAIL, AND CONTROL DESK, N.I.C.
129. 1-1/2" DIA. S.S. HANDRAIL. SEE DETAILS 1.2 / 13.01.

tBP
architecture
planning
interiors
management

LICENSED ARCHITECT
NO. C-18
REG. 5-31-11
STATE OF CALIFORNIA

tBP/Architecture
5455 Wilshire Boulevard, Suite 1200
Los Angeles, CA 90036-4242
ph: 323. 556. 3788 fx: 323. 556. 3799

architect

consultant

IDENTIFICATION STAMP
DIV. OF THE STATE ARCHITECT
OFFICE OF REGULATION SERVICES
File No. 19-C11
Appl No. 03-112201
AC ____ FLS ____ SS ____
DATE ____

DSA Los Angeles Basin Regional Office
700 North Alameda Street, Suite 5-500
Los Angeles, California 90012
ph: 213/897-3995 fx: 213/897-3159/0726

agency

ANTELOPE VALLEY COLLEGE HEALTH & SCIENCE BUILDING

ANTELOPE VALLEY COMMUNITY COLLEGE DISTRICT
3041 WEST AVENUE K
LANCASTER, CA 93536-5426

owner

tBP project number: 2064L00
file name: A-0718-EP-3OPCR.dwg
drawn by: - checked by: MK
date: JULY 30, 2009 - 100% CD

Rev:	date:	description:
2	2/26/10	ADDENDUM #2

THIS DRAWING AND THE DESIGNS, DEPICTIONS, IDEAS AND OTHER INFORMATION CONTAINED HEREIN CONSTITUTE UNPUBLISHED WORK OF tBP/ARCHITECTURE AND SHALL REMAIN THE PROPERTY OF tBP/ARCHITECTURE IN PERPETUITY. NO PART THEREOF SHALL BE REPRODUCED, DISCLOSED, DISTRIBUTED, SOLD, PUBLISHED OR OTHERWISE USED IN ANY WAY WITHOUT THE ADVANCED EXPRESS WRITTEN CONSENT OF tBP/ARCHITECTURE.

drawing title:
ENLARGED CLASSROOM PLAN & INT ELEVATIONS

drawing no.:
A-7.18
drawing of

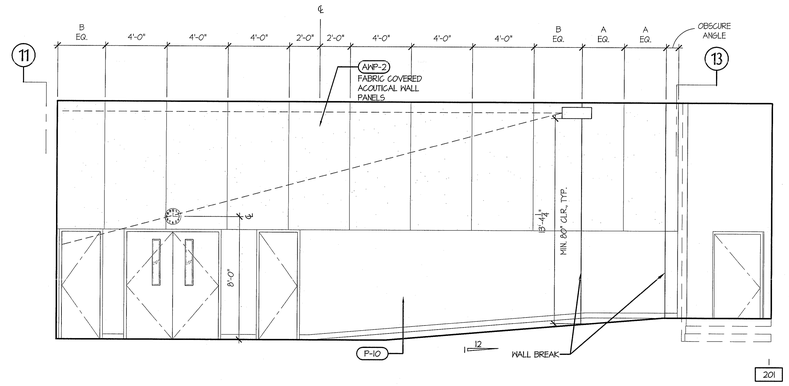

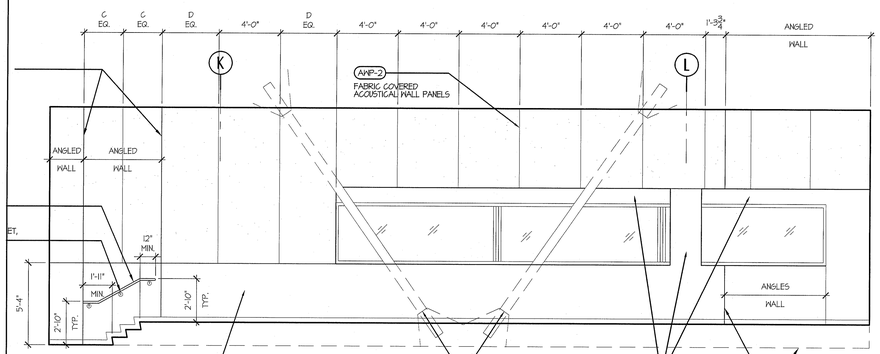

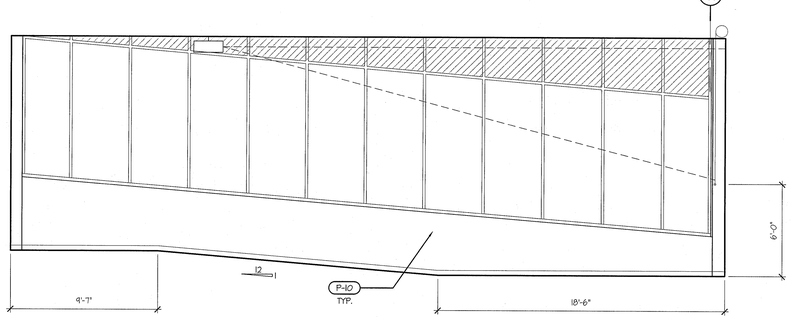

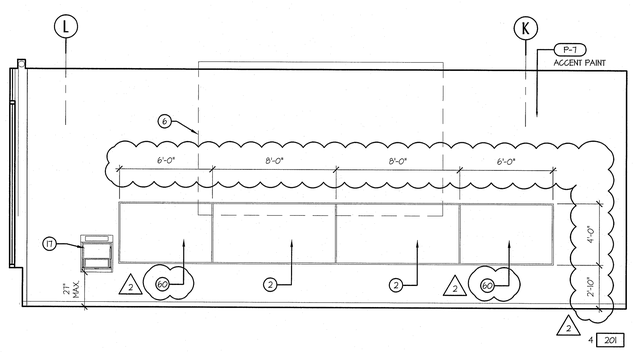

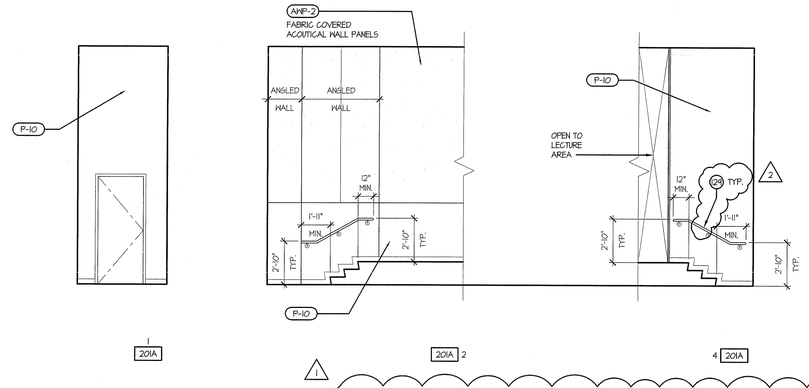

LECTURE HALL REAR EXIT INTERIOR ELEVATION

SCALE: 1/4" = 1'-0"

HS 201A

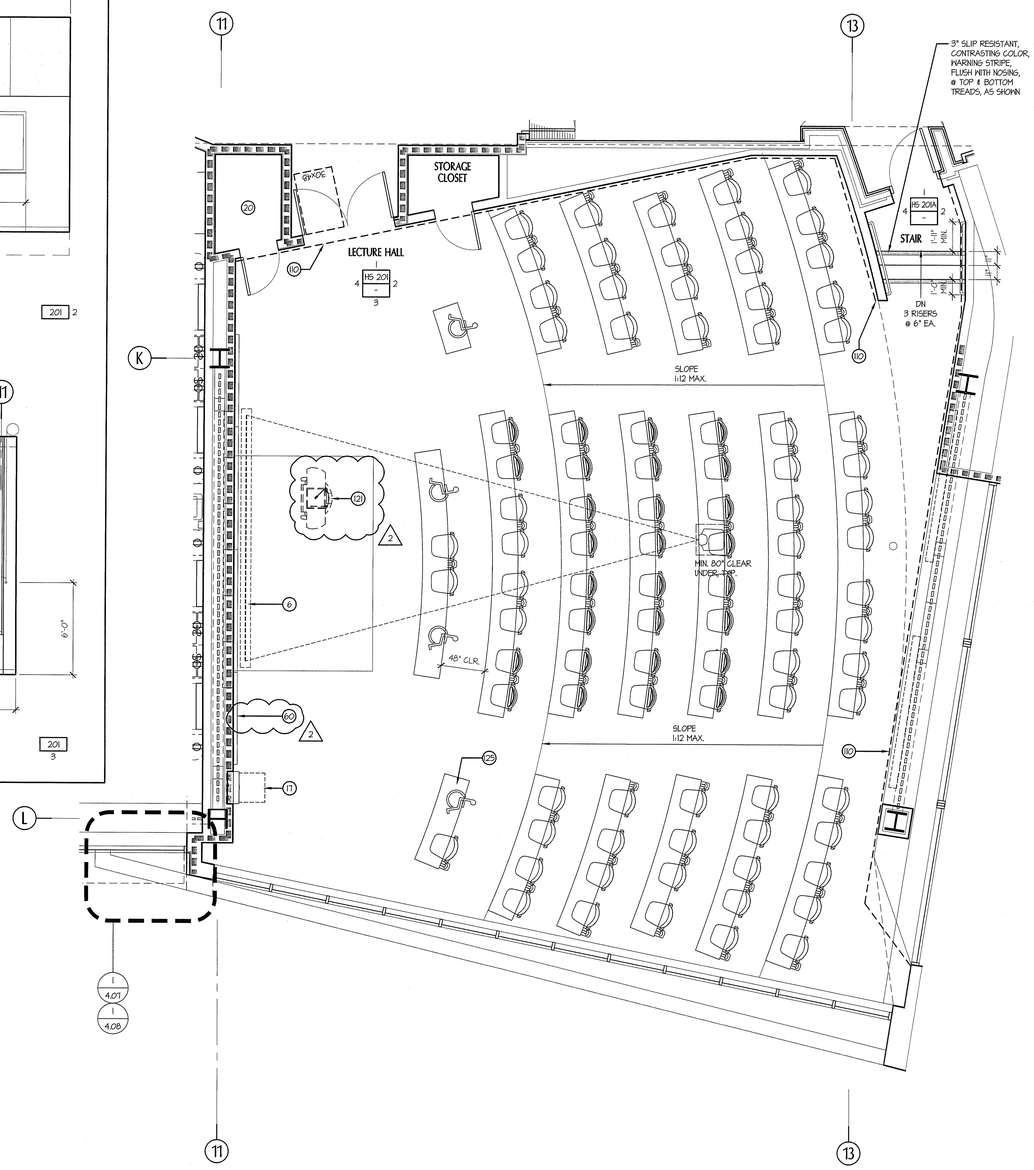

LECTURE HALL INTERIOR ELEVATION

SCALE: 1/4" = 1'-0"

HS 201

ENLARGED LECTURE HALL PLAN

SCALE: 1/4" = 1'-0"

1

NORTH

GENERAL NOTES

1. KEYNOTES ARE STANDARD FOR ALL INTERIOR ELEVATION AND ENLARGED PLAN DRAWINGS. NOT ALL NOTES USED ON A PARTICULAR SHEET.
2. PROVIDE ADJUSTABLE SHELVES AND LOCKS IN ALL CABINETRY.
3. ALL FIXTURES AND ACCESSORIES ARE ACCESSIBLE UNLESS OTHERWISE NOTED.
4. PROVIDE EQUAL TOLERANCE AT EACH END OF UPPER & LOWER CABINET RUNS.
5. ALL FIRE ALARM DEVICES & THERMOSTATS TO BE INSTALLED CLEAR OF MARKERBOARD AND TACKBOARDS, TYP.
6. COORDINATE INSTALLATION OF ALL ACOUSTICAL PANELS TO SCRIBE AROUND ALL MARKERBOARDS & TACKBOARDS, TYP.

GENERAL KEYNOTES

1. HAND SINK, REGULAR
2. MARKER BD (TOP OF TRAY MAX 34" AFF). PROVIDE BACKING PLATES PER 13/6.05.
3. ACCESSIBLE COMPUTER STATIONS, NIC
4. NOT USED
5. ADJUSTABLE SHELVES
6. RECESSED MOTORIZED PROJECTION SCREEN, SEE AUDIO VISUAL
7. PLAM COUNTERTOP
8. PLAM COUNTERTOP AND BACKSPLASH
9. PLAM UPPER CABINET
10. PLAM COUNTER W/ MANIKIN STORAGE BELOW
11. PLAM COUNTER / CHECK-IN STATION
12. PLAM FULL HEIGHT CABINET
13. PLAM ACCESSIBLE CABINET DOORS WITH KICK
14. PLAM UPPER CABINET(S) W/ WHITEBOARD FACE
15. PLAM UPPER CABINET(S) WITH MAIL BOXES
16. NOT USED
17. WALL MOUNT MEDIA BOX - SEE AUDIO VISUAL DWGS. MAX 4" PROJECTION OR MAX. 21" AFF TO BOTTOM, NIC
18. NOT USED
19. NOT USED
20. EQUIPMENT CLOSET
21. NOT USED
22. RUBBER BASE
23. NOT USED
24. NOT USED
25. HOSPITAL BED WITH OVERBED TRAY TABLE, NIC
26. BEDSIDE TABLE/ NIGHT STAND, NIC
27. (E) RELOCATED "COGENT" HEADWALL W/ ELECT., O2, COMPRESSED AIR, & VACUUM
28. HAND SINK W/ ELECTRONIC SENSOR
29. HAND SINK SINK W/ FOOT PEDAL
30. NOT USED
31. NOT USED
32. NOT USED
33. MED CART, NIC
34. AMBULANCE GURNEY, NIC
35. NOT USED
36. NOT USED
37. NOT USED
38. 95 M MAN MANIKEN
39. DELIVERY BED, NIC
40. POST PARTUM BED, NIC
41. PEDIATRIC CRIB, NIC
42. PEDIATRIC MONITOR
43. CHILD CRIB, NIC
44. ISOLETTE, NIC
45. L/D WARMER, NIC
46. CRASH CART, NIC
47. FETAL MONITOR/ CART, NIC
48. COMPRESSOR, NIC
49. DESK, NIC
50. WARMER / BASSINET, NIC
51. SKELETON ON A STAND, NIC
52. COPIER / PRINTER, NIC
53. ICE MAKER, NIC
54. NOT USED
55. COMMERCIAL REFRIGERATOR, CFCI
56. COMMERICAL FREEZER, CFCI
57. LOCKERS, CFCI. PROVIDE BACKING PLATE PER 20/6.05, FLOOR ANCHORAGE PER 18/6.05.
58. WASHER, FRONT-LOADING, CFCI
59. DRYER, FRONT-LOADING, CFCI
60. TACK/BULLETIN BD (TOP OF TRAY MAX 34" AFF.). PROVIDE BACKING PLATES PER 13/6.05.
61. PLATING TABLE, ACCESSIBLE, NIC. PROVIDE 30" W. X 27" H. X 19" D. CLEAR SPACE.
62. NOT USED
63. MIRROR, CFCI
64. NOT USED
65. DOUBLE SINK W/ GARBAGE DISPOSAL
66. INDUSTRIAL STAINLESS STEEL COUNTER AND BASE CABINETS
67. DRY ERASE MARKERBOARD PLAM UPPER CABINETS
68. NOT USED
69. PAPER TOWEL DISPENSER, OFCI
70. NOT USED
71. NOT USED
72. PLAM UPPER CABINET(S) WITH WRITE-ON STRIP
73. PLAM UPPER CABINET W/ OPEN SHELVES
74. DISPLAY UNIT, SEE 6/6.03
75. NOT USED
76. MOVABLE METRO SHELVING, NIC
77. NOT USED
78. NOT USED
79. NOT USED
80. CEILING MOUNTED CURTAIN & TRACK
81. NOT USED
82. NOT USED
83. NOT USED
84. NOT USED
85. NOT USED
86. NOT USED
87. OVERHEAD LIGHT
88. TEACHING WALL, SEE 18/6.05
89. PULMONARY FUNCTION MACHINE, NIC
90. NOT USED
91. NOT USED
92. NOT USED
93. NOT USED
94. O_2/AIR/VACUUM, OFCI
95. NOT USED
96. EXAM TABLE, NIC
97. NOT USED
98. EKG CART, NIC
99. NOT USED
100. NOT USED
101. FLAT PANEL DISPLAY WITH SPEAKER, SHEET AV4.03, NIC
102. WALL MOUNTED CAMERA, SEE SHEET AV4.03, NIC
103. NOT USED
104. SOAP DISPENSER, OFCI
105. NOT USED
106. AV EQUIPMENT RACK, NIC, SEE AV DRAWINGS
107. NOT USED
108. NOT USED
109. NOT USED
110. ACOUSTICAL WALL PANELS
111. "COGENT" HEADWALL W/ ELECT., SIMULATED O2, COMPRESSED AIR & VACUUM OUTLETS. MAX. 4" PROJECTION.
112. "CONTOUR" HEADWALL W/ ELECT., SIMULATED O2, COMPRESSED AIR, & VACUUM OUTLETS MAX. 4" PROJECTION
113. NOT USED
114. NOT USED
115. NOT USED
116. NOT USED
117. NOT USED
118. TACKABLE WALLCOVERING, TWP-1
119. NOT USED
120. FREESTANDING OVERHEAD AND LOWER CABINET UNIT, SEE DETAIL 10/6.03
121. ACCESSIBLE LECTERN, N.I.C. MOBILE, ADJUSTABLE HEIGHT.
122. ALTERNATE #4: FUTURE METAL STUD / GYPSUM BOARD WALL, FUTURE CASEWORK, FUTURE EQUIPMENT, SHOWN DOTTED ON PLAN. SEE FOOD SERVICE DRAWINGS.
123. UNDER-STAIR LIGHT, SEE ELECTRICAL DWGS.
124. ALTERNATE #6: ADD SLOPED FLOOR AT PLANETARIUM. ADD FLOOR RAMPS AT PLANETARIUM VESTIBULES. ADD PLANETARIUM SEATING. CHANGE PLANETARIUM DOORS & FRAMES TO STANDARD HEIGHT. (BASE BID = FLAT FLOOR)
125. ACCESSIBLE DESK. PROVIDE 30" X 48" X 27" H. CLEAR SPACE AND ISA SYMBOL.
126. PROVIDE 4 WHEELCHAIR SPACES, 33" X 48" MIN.
127. 10" DEEP NICHE FOR FLAT PANEL SCREEN. COORDINATE DIMENSIONS AND CONNECTIONS WITH OWNER.
128. PLANETARIUM PROJECTOR, PLATFORM, GUARD RAIL, AND CONTROL DESK, N.I.C.
129. 1-1/2" DIA. S.S. HANDRAIL. SEE DETAILS 1, 2 / 13.01.

tBP
architecture
planning
interiors
management

tBP/Architecture
5455 Wilshire Boulevard, Suite 1200
Los Angeles, CA 90036-4242
ph: 323. 556. 3788 fx: 323. 556. 3799

LICENSED ARCHITECT
STATE OF CALIFORNIA

architect

consultant

IDENTIFICATION STAMP
DIV. OF THE STATE ARCHITECT
OFFICE OF REGULATION SERVICES
File No. 19-C11
Appl No. 03-112201
AC ____ FLS ____ SS ____
DATE ____

DSA Los Angeles Basin Regional Office
700 North Alameda Street, Suite 5-500
Los Angeles, California 90012
ph: 213/897-3995 fx: 213/897-3159/0726

agency

ANTELOPE VALLEY COLLEGE HEALTH & SCIENCE BUILDING

ANTELOPE VALLEY COMMUNITY COLLEGE DISTRICT
3041 WEST AVENUE K
LANCASTER, CA 93536-5426

owner

tBP project number : 20641.00

file name: A-0720-EP-LECT.dwg

drawn by: JS, MT checked by: MK, JP

date: JULY 30, 2009 - 100% CD

Rev:	date:	description:
1	11/16/09	ADDENDUM #1
2	2/26/10	ADDENDUM #2

THIS DRAWING AND THE DESIGNS, DEPICTIONS, IDEAS AND OTHER INFORMATION CONTAINED HEREIN CONSTITUTE UNPUBLISHED WORK OF EBYARCHITECTURE AND SHALL REMAIN THE PROPERTY OF EBYARCHITECTURE IN PERPETUITY. NO PART THEREOF SHALL BE REPRODUCED, DISCLOSED, DISTRIBUTED, SOLD, PUBLISHED OR OTHERWISE USED IN ANY WAY WITHOUT THE ADVANCED EXPRESS WRITTEN CONSENT OF EBYARCHITECTURE.

drawing title:

ENLARGED LECTURE HALL PLAN & INT ELEVATIONS

drawing no.:

A-7.20

drawing of

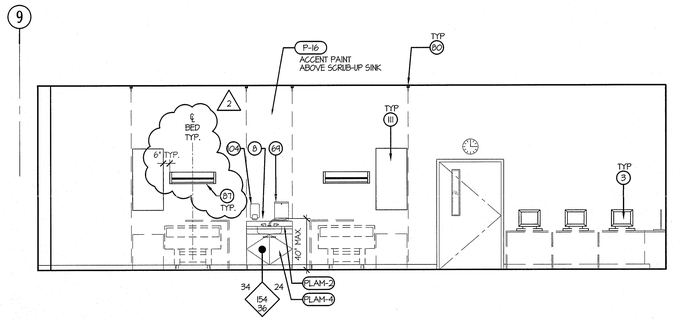

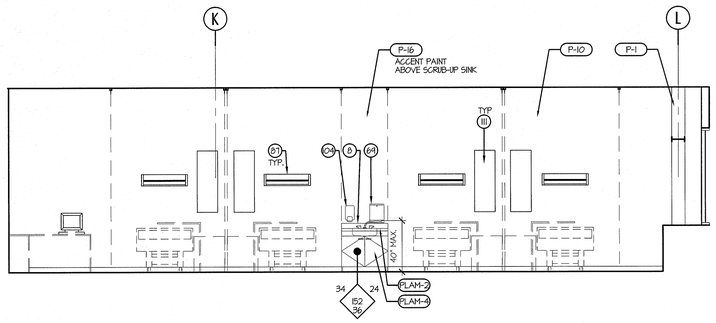

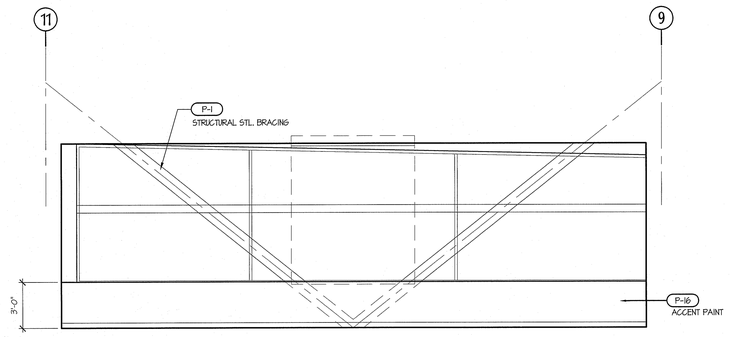

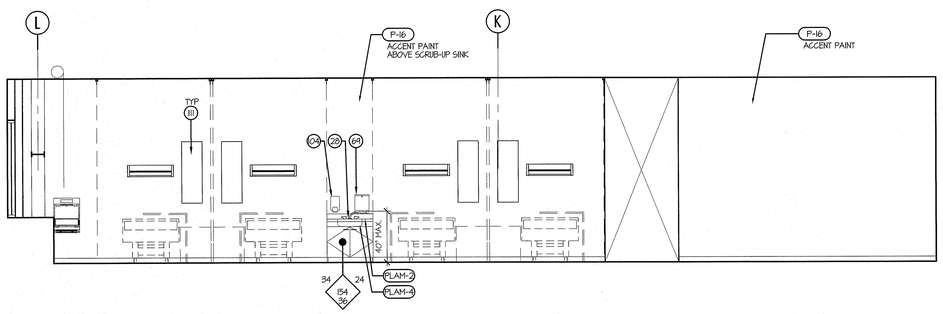

NURSING SKILLS LAB - LVN TRAINING ROOM INTERIOR ELEVATION

SCALE: 1/4" = 1'-0"

HS 205

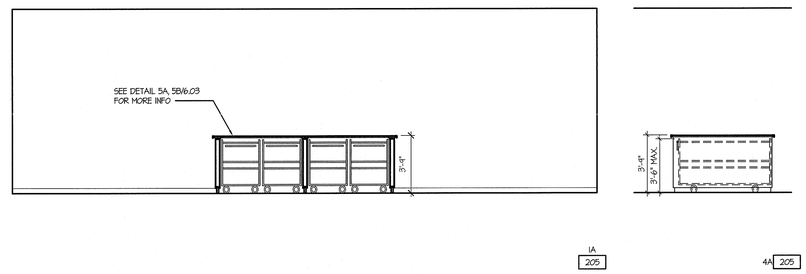

NURSING SKILLS LAB - MANIKIN STORAGE INTERIOR ELEVATION

SCALE: 1/4" = 1'-0"

HS 205

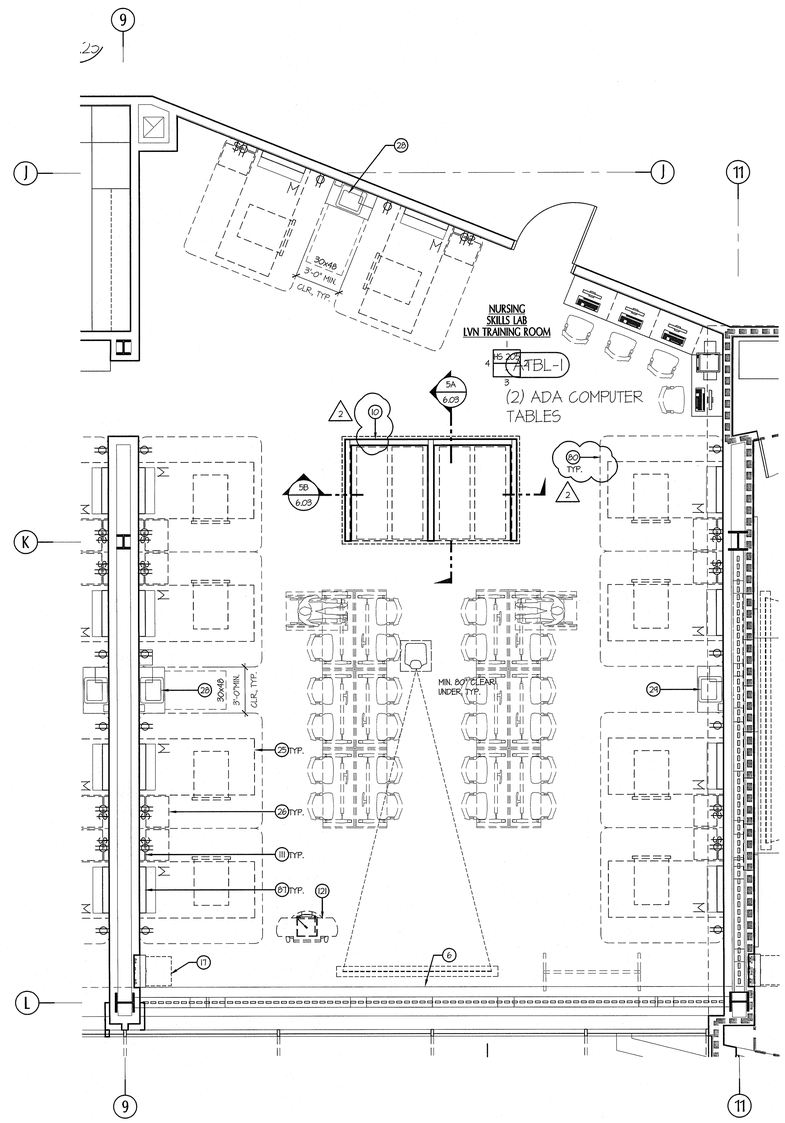

ENLARGED NURSING SKILLS LAB - LVN TRAINING ROOM PLAN

SCALE: 1/4" = 1'-0"

1

GENERAL NOTES

1. KEYNOTES ARE STANDARD FOR ALL INTERIOR ELEVATION AND ENLARGED PLAN DRAWINGS. NOT ALL NOTES USED ON A PARTICULAR SHEET.
2. PROVIDE ADJUSTABLE SHELVES AND LOCKS IN ALL CABINETRY.
3. ALL FIXTURES AND ACCESSORIES ARE ACCESSIBLE UNLESS OTHERWISE NOTED.
4. PROVIDE EQUAL TOLERANCE AT EACH END OF UPPER & LOWER CABINET RUNS.
5. ALL FIRE ALARM DEVICES & THERMOSTATS TO BE INSTALLED CLEAR OF MARKERBOARD AND TACKBOARDS, TYP.
6. COORDINATE INSTALLATION OF ALL ACOUSTICAL PANELS TO SCRIBE AROUND ALL MARKERBOARD & TACKBOARDS, TYP.

GENERAL KEYNOTES

1. HAND SINK, REGULAR
2. MARKER BD (TOP OF TRAY MAX 34" AFF). PROVIDE BACKING PLATES PER 13/6.05.
3. ACCESSIBLE COMPUTER STATIONS, NIC
4. NOT USED
5. ADJUSTABLE SHELVES
6. RECESSED MOTORIZED PROJECTION SCREEN, SEE AUDIO VISUAL
7. PLAM COUNTERTOP
8. PLAM COUNTERTOP AND BACKSPLASH
9. PLAM UPPER CABINET
10. PLAM COUNTER W/ MANIKIN STORAGE BELOW
11. PLAM COUNTER / CHECK-IN STATION
12. PLAM FULL HEIGHT CABINET
13. PLAM ACCESSIBLE CABINET DOORS WITH KICK
14. PLAM UPPER CABINET(S) W/ WHITEBOARD FACE
15. PLAM UPPER CABINET(S) WITH MAIL BOXES
16. NOT USED
17. WALL MOUNT MEDIA BOX - SEE AUDIO VISUAL DWGS. MAX 4" PROJECTION OR MAX. 21" AFF TO BOTTOM, NIC
18. NOT USED
19. NOT USED
20. EQUIPMENT CLOSET
21. NOT USED
22. RUBBER BASE
23. NOT USED
24. NOT USED
25. HOSPITAL BED WITH OVERBED TRAY TABLE, NIC
26. BEDSIDE TABLE/ NIGHT STAND, NIC
27. (E) RELOCATED "COSENT" HEADWALL W/ ELECT., O2, COMPRESSED AIR, & VACUUM
28. HAND SINK W/ ELECTRONIC SENSOR
29. HAND SINK SINK W/ FOOT PEDAL
30. NOT USED
31. NOT USED
32. NOT USED
33. MED CART, NIC
34. AMBULANCE GURNEY, NIC
35. NOT USED
36. NOT USED
37. NOT USED
38. 4.5 M MAN MANIKEN
39. DELIVERY BED, NIC
40. POST PARTUM BED, NIC
41. PEDIATRIC CRIB, NIC
42. PEDIATRIC MONITOR
43. CHILD CRIB, NIC
44. ISOLETTE, NIC
45. L/D WARMER, NIC
46. CRASH CART, NIC
47. FETAL MONITOR/ CART, NIC
48. COMPRESSOR, NIC
49. DESK, NIC
50. WARMER / BASSINET, NIC
51. SKELETON ON A STAND, NIC
52. COPIER / PRINTER, NIC
53. ICE MACEB, NIC
54. NOT USED
55. COMMERCIAL REFRIGERATOR, CFCI
56. COMMERICAL FREEZER, CFCI
57. LOCKERS, CFCI. PROVIDE BACKING PLATE PER 20/6.05, FLOOR ANCHORAGE PER 18/6.05.
58. WASHER, FRONT-LOADING, CFCI
59. DRYER, FRONT-LOADING, CFCI
60. TACK/BULLETIN BD (TOP OF TRAY MAX 34" AFF.). PROVIDE BACKING PLATES PER 13/6.05
61. PLATING TABLE, ACCESSIBLE, NIC. PROVIDE 30" H. X 27" H. X 19" D. CLEAR SPACE.
62. NOT USED
63. MIRROR, CFCI
64. NOT USED
65. DOUBLE SINK W/ GARBAGE DISPOSAL
66. INDUSTRIAL STAINLESS STEEL COUNTER AND BASE CABINETS
67. DRY ERASE MARKERBOARD PLAM UPPER CABINETS
68. NOT USED
69. PAPER TOWEL DISPENSER, CFCI
70. NOT USED
71. NOT USED
72. PLAM UPPER CABINET(S) WITH WRITE-ON STRIP
73. PLAM UPPER CABINET W/ OPEN SHELVES
74. DISPLAY UNIT, SEE 6/6.03
75. NOT USED
76. MOVABLE METRO SHELVING, NIC
77. NOT USED
78. NOT USED
79. NOT USED
80. CEILING MOUNTED CURTAIN & TRACK
81. NOT USED
82. NOT USED
83. NOT USED
84. NOT USED
85. NOT USED
86. NOT USED
87. OVERHEAD LIGHT
88. TEACHING WALL, SEE 18/6.05
89. PULMONARY FUNCTION MACHINE, NIC
90. NOT USED
91. NOT USED
92. NOT USED
93. NOT USED
94. O_2/AIR/VACUUM, CFCI
95. NOT USED
96. EXAM TABLE, NIC
97. NOT USED
98. EKG CART, NIC
99. NOT USED
100. NOT USED
101. FLAT PANEL DISPLAY WITH SPEAKER, SHEET AV4.03, NIC
102. WALL MOUNTED CAMERA, SEE SHEET AV4.03, NIC
103. NOT USED
104. SOAP DISPENSER, CFCI
105. NOT USED
106. AV EQUIPMENT RACK, NIC, SEE AV DRAWINGS
107. NOT USED
108. NOT USED
109. NOT USED
110. ACOUSTICAL WALL PANELS
111. "COSENT" HEADWALL W/ ELECT., SIMULATED O2, COMPRESSED AIR & VACUUM OUTLETS. MAX. 4" PROJECTION.
112. "CONTOUR" HEADWALL W/ ELECT., SIMULATED O2, COMPRESSED AIR, & VACUUM OUTLETS.MAX. 4" PROJECTION
113. NOT USED
114. NOT USED
115. NOT USED
116. NOT USED
117. NOT USED
118. TACKABLE WALLCOVERING, TWP-1
119. NOT USED
120. FREESTANDING OVERHEAD AND LOWER CABINET UNIT, SEE DETAIL 10/6.03
121. ACCESSIBLE LECTERN, N.I.C. MOBILE, ADJUSTABLE HEIGHT.
122. ALTERNATE #4: FUTURE METAL STUD / GYPSUM BOARD WALL, FUTURE CASEWORK, FUTURE EQUIPMENT, SHOWN DOTTED ON PLAN. SEE FOOD SERVICE DRAWINGS.
123. UNDER-STAIR LIGHT, SEE ELECTRICAL DWGS.
124. ALTERNATE #6: ADD SLOPED FLOOR AT PLANETARIUM. ADD FLOOR RAMPS AT PLANETARIUM VESTIBULES. ADD PLANETARIUM SEATING. CHANGE PLANETARIUM DOORS & FRAMES TO STANDARD HEIGHT. (BASE BID = FLAT FLOOR)
125. ACCESSIBLE DESK. PROVIDE 30" X 48" X 27" H. CLEAR SPACE AND ISA SYMBOL.
126. PROVIDE 4 WHEELCHAIR SPACES, 33" X 48" MIN.
127. 10" DEEP NICHE FOR FLAT PANEL SCREEN. COORDINATE DIMENSIONS AND CONNECTIONS WITH OWNER.

tBP
architecture
planning
interiors
management

tBP/Architecture
5455 Wilshire Boulevard, Suite 1200
Los Angeles, CA 90036-4242
ph: 323. 556. 3788 fx: 323. 556. 3799

LICENSED ARCHITECT
STEVEN K. ALI
No. C-29
STATE OF CALIFORNIA

architect

consultant

IDENTIFICATION STAMP
DIV. OF THE STATE ARCHITECT
OFFICE OF REGULATION SERVICES
File No. 19-C11
Appl No. 03-112201
AC ____ FLS ____ SS ____
DATE ____

DSA Los Angeles Basin Regional Office
700 North Alameda Street, Suite 5-500
Los Angeles, California 90012
ph: 213/897-3995 fx: 213/897-3159/0726

agency

ANTELOPE VALLEY COLLEGE HEALTH & SCIENCE BUILDING

ANTELOPE VALLEY COMMUNITY COLLEGE DISTRICT
3041 WEST AVENUE K
LANCASTER, CA 93536-5426

owner

tBP project number : 20641.00
file name: A-0721-EP-NSL.dwg
drawn by: JS checked by: MK
date: JULY 30, 2009 - 100% CD

Rev:	date:	description:
2	2/26/10	ADDENDUM #2

THIS DRAWING AND THE DESIGNS, DEPICTIONS, IDEAS AND OTHER INFORMATION CONTAINED HEREIN CONSTITUTE UNPUBLISHED WORK OF tBP/ARCHITECTURE AND SHALL REMAIN THE PROPERTY OF tBP/ARCHITECTURE IN PERPETUITY. NO PART THEREOF SHALL BE REPRODUCED, DISCLOSED, DISTRIBUTED, SOLD, PUBLISHED OR OTHERWISE USED IN ANY WAY WITHOUT THE ADVANCED EXPRESS WRITTEN CONSENT OF tBP/ARCHITECTURE.

drawing title:
ENL'D NURS SKILLS LAB
PLAN & INT ELEVATIONS

drawing no.:
A-7.21
drawing of

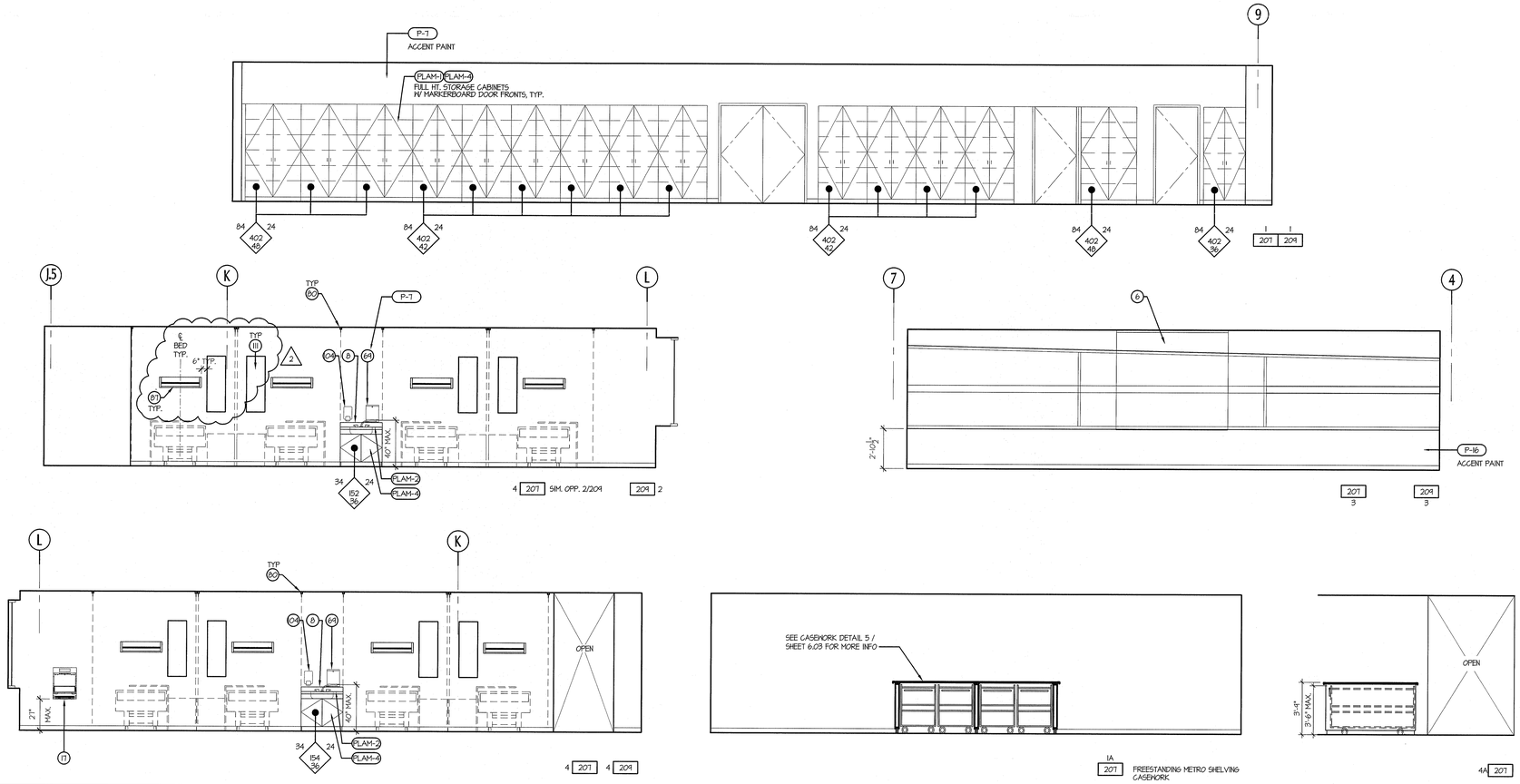

NURSING SKILLS LAB - RN TRAINING ROOM INTERIOR ELEVATION

SCALE: 1/4" = 1'-0"

HS 207

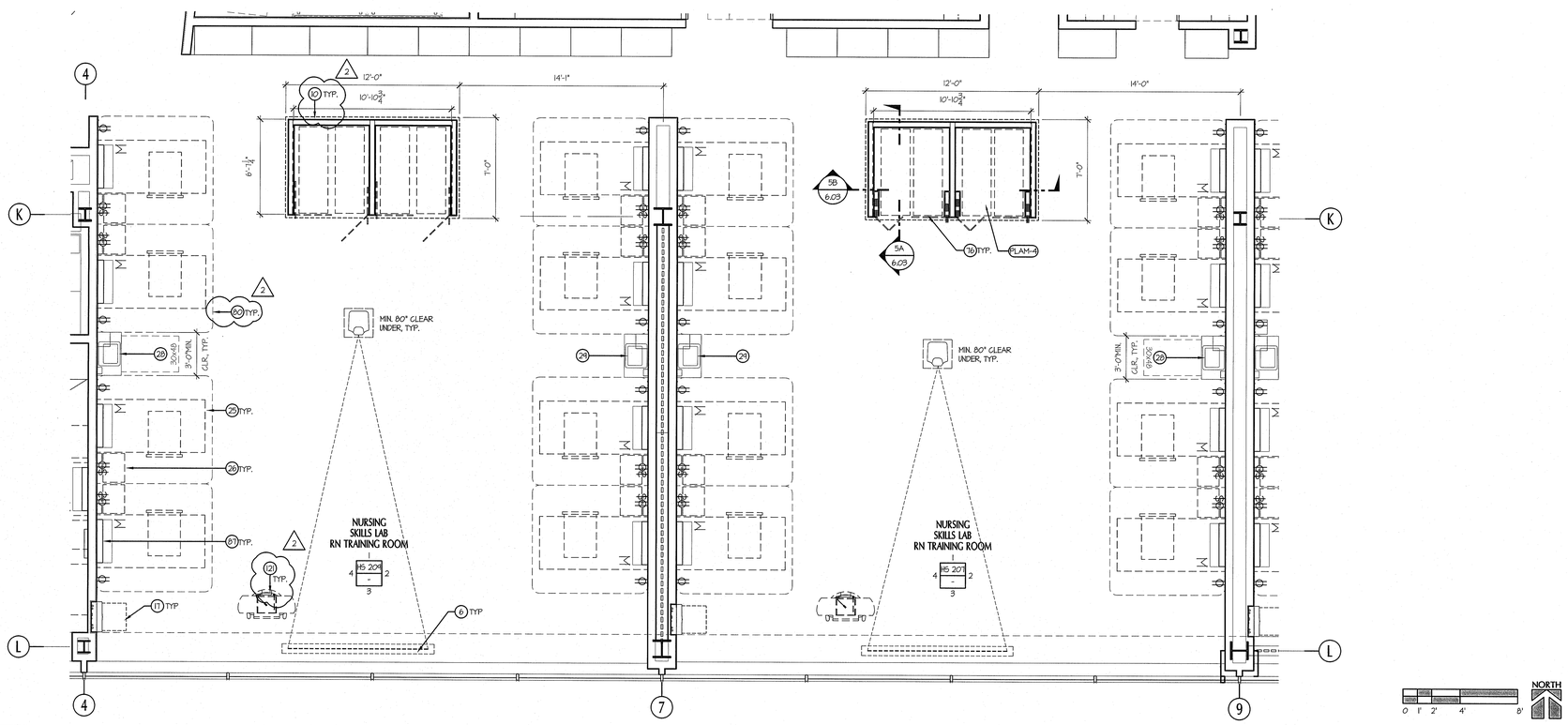

TYPICAL ENLARGED NURSING SKILLS LAB - RN TRAINING ROOM PLAN

SCALE: 1/4" = 1'-0"

1

GENERAL NOTES

1. KEYNOTES ARE STANDARD FOR ALL INTERIOR ELEVATION AND ENLARGED PLAN DRAWINGS. NOT ALL NOTES USED ON A PARTICULAR SHEET.
2. PROVIDE ADJUSTABLE SHELVES AND LOCKS IN ALL CABINETRY.
3. ALL FIXTURES AND ACCESSORIES ARE ACCESSIBLE UNLESS OTHERWISE NOTED.
4. PROVIDE EQUAL TOLERANCE AT EACH END OF UPPER & LOWER CABINET RUNS.
5. ALL FIRE ALARM DEVICES & THERMOSTATS TO BE INSTALLED CLEAR OF MARKERBOARD AND TACKBOARDS, TYP.
6. COORDINATE INSTALLATION OF ALL ACOUSTICAL PANELS TO SCRIBE AROUND ALL MARKERBOARDS & TACKBOARDS, TYP.

GENERAL KEYNOTES

1. HAND SINK, REGULAR
2. MARKER BD (TOP OF TRAY MAX 34" AFF). PROVIDE BACKING PLATES PER 13/6.05.
3. ACCESSIBLE COMPUTER STATIONS, NIC
4. NOT USED
5. ADJUSTABLE SHELVES (2)
6. RECESSED MOTORIZED PROJECTION SCREEN, SEE AUDIO VISUAL
7. PLAM COUNTERTOP
8. PLAM COUNTERTOP AND BACKSPLASH
9. PLAM UPPER CABINET
10. PLAM COUNTER W/ MANIKIN STORAGE BELOW
11. PLAM COUNTER / CHECK-IN STATION
12. PLAM FULL HEIGHT CABINET
13. PLAM ACCESSIBLE CABINET DOORS WITH KICK
14. PLAM UPPER CABINET(S) W/ WHITEBOARD FACE
15. PLAM UPPER CABINET(S) WITH MAIL BOXES
16. NOT USED
17. WALL MOUNT MEDIA BOX - SEE AUDIO VISUAL DWGS. MAX 4" PROJECTION OR MAX. 27" AFF TO BOTTOM, NIC
18. NOT USED
19. NOT USED (2)
20. EQUIPMENT CLOSET
21. NOT USED
22. RUBBER BASE (2)
23. NOT USED
24. NOT USED
25. HOSPITAL BED WITH OVERBED TRAY TABLE, NIC
26. BEDSIDE TABLE/ NIGHT STAND, NIC
27. (E) RELOCATED "COSENT" HEADWALL W/ ELECT., O2, COMPRESSED AIR, & VACUUM
28. HAND SINK W/ ELECTRONIC SENSOR
29. HAND SINK SINK W/ FOOT PEDAL
30. NOT USED
31. NOT USED (2)
32. NOT USED
33. MED CART, NIC
34. AMBULANCE GURNEY, NIC
35. NOT USED
36. NOT USED (2)
37. NOT USED
38. 3.5 M MAN MANIKEN
39. DELIVERY BED, NIC
40. POST PARTUM BED, NIC
41. PEDIATRIC CRIB, NIC
42. PEDIATRIC MONITOR
43. CHILD CRIB, NIC
44. ISOLETTE, NIC
45. L/D WARMER, NIC
46. CRASH CART, NIC
47. FETAL MONITOR/ CART, NIC (2)
48. COMPRESSOR, NIC
49. DESK, NIC
50. WARMER / BASSINET, NIC
51. SKELETON ON A STAND, NIC
52. COPIER / PRINTER, NIC
53. ICE MAKER, NIC
54. NOT USED
55. COMMERCIAL REFRIGERATOR, CFCI
56. COMMERCIAL FREEZER, CFCI (2)
57. LOCKERS, CFCI. PROVIDE BACKING PLATE PER 20/6.05, FLOOR ANCHORAGE PER 18/6.05.
58. WASHER, FRONT-LOADING, CFCI
59. DRYER, FRONT-LOADING, CFCI
60. TACKBULLETIN BD (TOP OF TRAY MAX 34" AFF.). PROVIDE BACKING PLATES PER 8/6.05
61. PLATING TABLE, ACCESSIBLE, NIC. PROVIDE 30" W. X 27" H. X 14" D. CLEAR SPACE.
62. NOT USED
63. MIRROR, CFCI (2)
64. NOT USED
65. DOUBLE SINK W/ GARBAGE DISPOSAL
66. INDUSTRIAL STAINLESS STEEL COUNTER AND BASE CABINETS
67. DRY ERASE MARKERBOARD PLAM UPPER CABINETS
68. NOT USED
69. PAPER TOWEL DISPENSER, OFCI (2)
70. NOT USED
71. NOT USED
72. PLAM UPPER CABINET(S) WITH WRITE-ON STRIP
73. PLAM UPPER CABINET W/ OPEN SHELVES
74. DISPLAY UNIT, SEE 6/6.03
75. NOT USED (2)
76. MOVABLE METRO SHELVING, NIC
77. NOT USED
78. NOT USED
79. NOT USED
80. CEILING MOUNTED CURTAIN & TRACK
81. NOT USED
82. NOT USED (2)
83. NOT USED
84. NOT USED
85. NOT USED
86. NOT USED
87. OVERHEAD LIGHT
88. TEACHING WALL, SEE 18/6.05 (2)
89. PULMONARY FUNCTION MACHINE, NIC
90. NOT USED
91. NOT USED
92. NOT USED
93. NOT USED (2)
94. O2/AIR/VACUUM, OFCI
95. NOT USED
96. EXAM TABLE, NIC (2)
97. NOT USED
98. EKG CART, NIC
99. NOT USED
100. NOT USED (2)
101. FLAT PANEL DISPLAY WITH SPEAKER, SHEET AV4.03, NIC
102. WALL MOUNTED CAMERA, SEE SHEET AV4.03, NIC
103. NOT USED
104. SOAP DISPENSER, OFCI
105. NOT USED
106. AV EQUIPMENT RACK, NIC, SEE AV DRAWINGS
107. NOT USED
108. NOT USED
109. NOT USED
110. ACOUSTICAL WALL PANELS
111. "COSENT" HEADWALL W/ ELECT., SIMULATED O2, COMPRESSED AIR & VACUUM OUTLETS. MAX. 4" PROJECTION.
112. "CONTOUR" HEADWALL W/ ELECT., SIMULATED O2, COMPRESSED AIR, & VACUUM OUTLETS MAX. 4" PROJECTION
113. NOT USED (1)
114. NOT USED
115. NOT USED (2)
116. NOT USED
117. NOT USED
118. TACKABLE WALLCOVERING, TWP-1 (2)
119. NOT USED
120. FREESTANDING OVERHEAD AND LOWER CABINET UNIT, SEE DETAIL 10/6.03
121. ACCESSIBLE LECTERN, N.I.C. MOBILE, ADJUSTABLE HEIGHT.
122. ALTERNATE #4: FUTURE METAL STUD / GYPSUM BOARD WALL, FUTURE CASEWORK, FUTURE EQUIPMENT, SHOWN DOTTED ON PLAN. SEE FOOD SERVICE DRAWINGS.
123. UNDER-STAIR LIGHT, SEE ELECTRICAL DWGS.
124. ALTERNATE #6: ADD SLOPED FLOOR AT PLANETARIUM. ADD FLOOR RAMPS AT PLANETARIUM VESTIBULES. ADD PLANETARIUM SEATING. CHANGE PLANETARIUM DOORS & FRAMES TO STANDARD HEIGHT. (BASE BID = FLAT FLOOR)
125. ACCESSIBLE DESK. PROVIDE 30" X 48" X 27" H. CLEAR SPACE AND ISA SYMBOL.
126. PROVIDE 4 WHEELCHAIR SPACES, 33" X 48" MIN.
127. 10" DEEP NICHE FOR FLAT PANEL SCREEN. COORDINATE DIMENSIONS AND CONNECTIONS WITH OWNER. (2)

tBP
architecture planning interiors management

tBP/Architecture
5455 Wilshire Boulevard, Suite 1200
Los Angeles, CA 90036-4242
ph: 323. 556. 3788 fx: 323. 556. 3799

LICENSED ARCHITECT
STATE OF CALIFORNIA

architect

consultant

IDENTIFICATION STAMP
DIV. OF THE STATE ARCHITECT
OFFICE OF REGULATION SERVICES
File No. 19-C11
Appl No. 03-112201
AC ____ FLS ____ SS ____
DATE ____

DSA Los Angeles Basin Regional Office
700 North Alameda Street, Suite 5-500
Los Angeles, California 90012
ph: 213/897-3995 fx: 213/897-3159/0726

agency

ANTELOPE VALLEY COLLEGE HEALTH & SCIENCE BUILDING

ANTELOPE VALLEY COMMUNITY COLLEGE DISTRICT
3041 WEST AVENUE K
LANCASTER, CA 93536-5426

owner

tBP project number : 206.41.00
file name: A-0722-EP-NSL.dwg
drawn by: JS checked by: MK
date: JULY 30, 2009 - 100% CD

Rev:	date:	description:
2	2/26/10	ADDENDUM #2

THIS DRAWING AND THE DESIGNS, DEPICTIONS, IDEAS AND OTHER INFORMATION CONTAINED HEREIN CONSTITUTE UNPUBLISHED WORK OF tBP/ARCHITECTURE AND SHALL REMAIN THE PROPERTY OF tBP/ARCHITECTURE IN PERPETUITY. NO PART THEREOF SHALL BE REPRODUCED, DISCLOSED, DISTRIBUTED, SOLD, PUBLISHED OR OTHERWISE USED IN ANY WAY WITHOUT THE ADVANCED EXPRESS WRITTEN CONSENT OF tBP/ARCHITECTURE.

drawing title:
ENL'D NURS SKILLS LAB PLAN & INT ELEVATIONS

drawing no.:
A-7.22
drawing of

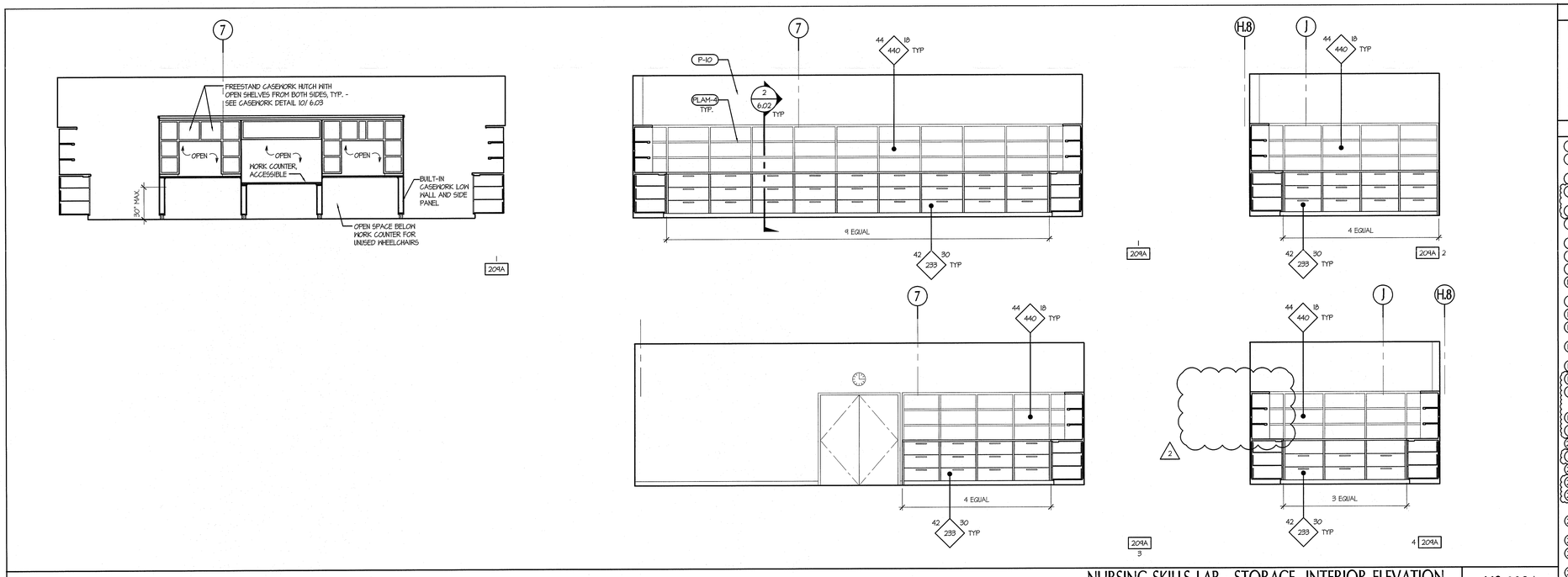

NURSING SKILLS LAB - STORAGE INTERIOR ELEVATION

SCALE: 1/4" = 1'-0"

HS 209A

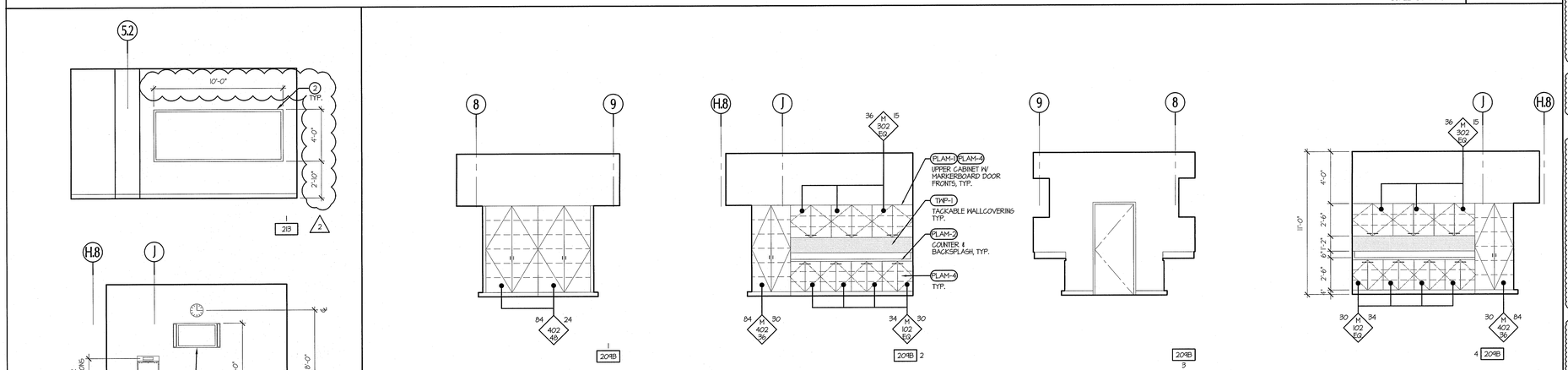

NURSING SKILLS LAB - LOCKED STORAGE INTERIOR ELEVATION

SCALE: 1/4" = 1'-0"

HS 209B

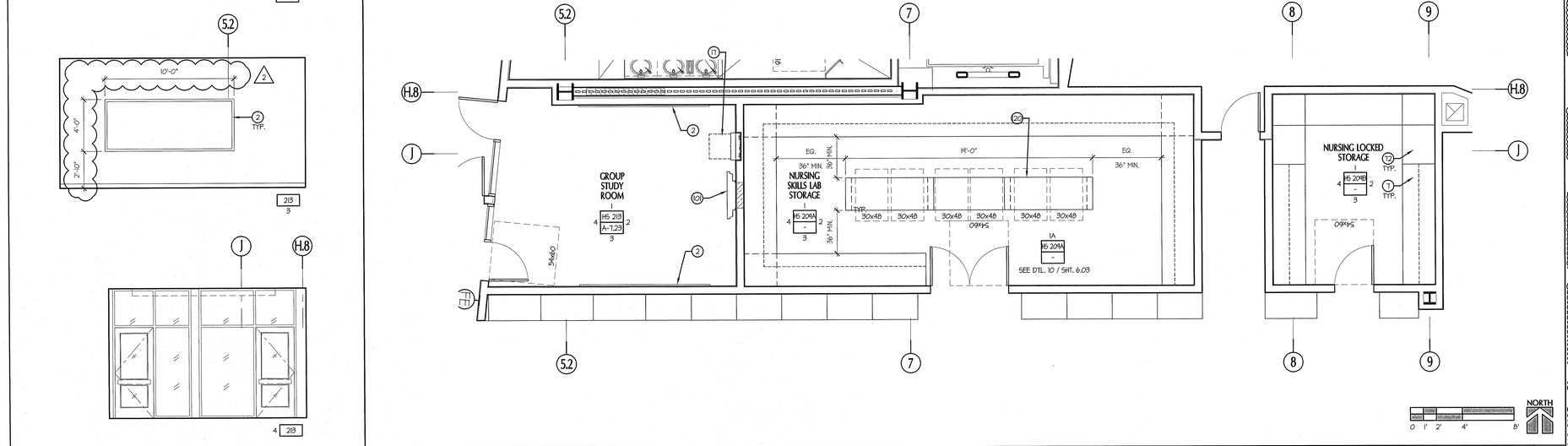

ENLARGED NURSING SKILLS LAB - GROUP STUDY ROOM & STORAGE PLANS

SCALE: 1/4" = 1'-0"

1

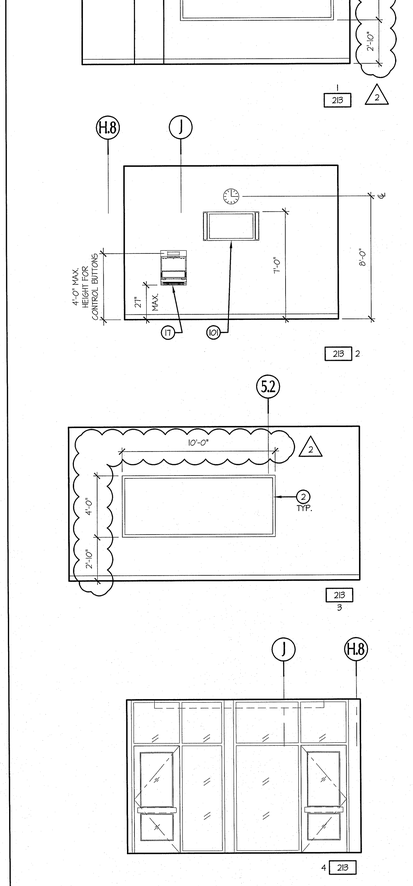

GSR INTERIOR ELEVATION

SCALE: 1/4" = 1'-0"

HS 213

GENERAL NOTES

1. KEYNOTES ARE STANDARD FOR ALL INTERIOR ELEVATION AND ENLARGED PLAN DRAWINGS. NOT ALL NOTES USED ON A PARTICULAR SHEET.
2. PROVIDE ADJUSTABLE SHELVES AND LOCKS IN ALL CABINETRY.
3. ALL FIXTURES AND ACCESSORIES ARE ACCESSIBLE UNLESS OTHERWISE NOTED.
4. PROVIDE EQUAL TOLERANCE AT EACH END OF UPPER & LOWER CABINET RUNS.
5. ALL FIRE ALARM DEVICES & THERMOSTATS TO BE INSTALLED CLEAR OF MARKERBOARD AND TACKBOARDS, TYP.
6. COORDINATE INSTALLATION OF ALL ACOUSTICAL PANELS TO SCRIBE AROUND ALL MARKERBOARD & TACKBOARDS, TYP.

GENERAL KEYNOTES

1. HAND SINK, REGULAR
2. MARKER BD (TOP OF TRAY MAX 34" AFF). PROVIDE BACKING PLATES PER 13/6.05.
3. ACCESSIBLE COMPUTER STATIONS, NIC
4. NOT USED
5. ADJUSTABLE SHELVES
6. RECESSED MOTORIZED PROJECTION SCREEN, SEE AUDIO VISUAL
7. PLAM COUNTERTOP
8. PLAM COUNTERTOP AND BACKSPLASH
9. PLAM UPPER CABINET
10. PLAM COUNTER W/ MANIKIN STORAGE BELOW
11. PLAM COUNTER / CHECK-IN STATION
12. PLAM FULL HEIGHT CABINET
13. PLAM ACCESSIBLE CABINET DOORS WITH KICK
14. PLAM UPPER CABINET(S) W/ WHITEBOARD FACE
15. PLAM UPPER CABINET(S) WITH MAIL BOXES
16. NOT USED
17. WALL MOUNT MEDIA BOX - SEE AUDIO VISUAL DWGS. MAX 4" PROJECTION OR MAX. 21" AFF TO BOTTOM, NIC
18. NOT USED
19. NOT USED
20. EQUIPMENT CLOSET
21. NOT USED
22. RUBBER BASE
23. NOT USED
24. NOT USED
25. HOSPITAL BED WITH OVERBED TRAY TABLE, NIC
26. BEDSIDE TABLE/ NIGHT STAND, NIC
27. (E) RELOCATED "COSENT" HEADWALL W/ ELECT., O2, COMPRESSED AIR, & VACUUM
28. HAND SINK W/ ELECTRONIC SENSOR
29. HAND SINK SINK W/ FOOT PEDAL
30. NOT USED
31. NOT USED
32. NOT USED
33. MED CART, NIC
34. AMBULANCE GURNEY, NIC
35. NOT USED
36. NOT USED
37. NOT USED
38. 95 M MAN MANIKEN
39. DELIVERY BED, NIC
40. POST PARTUM BED, NIC
41. PEDIATRIC CRIB, NIC
42. PEDIATRIC MONITOR
43. CHILD CRIB, NIC
44. ISOLETTE, NIC
45. L/D WARMER, NIC
46. CRASH CART, NIC
47. FETAL MONITOR/ CART, NIC
48. COMPRESSOR, NIC
49. DESK, NIC
50. WARMER / BASSINET, NIC
51. SKELETON ON A STAND, NIC
52. COPIER / PRINTER, NIC
53. ICE MAKER, NIC
54. NOT USED
55. COMMERCIAL REFRIGERATOR, CFCI
56. COMMERICAL FREEZER, CFCI
57. LOCKERS, CFCI. PROVIDE BACKING PLATE PER 20/6.05, FLOOR ANCHORAGE PER 18/6.05.
58. WASHER, FRONT-LOADING, CFCI
59. DRYER, FRONT-LOADING, CFCI
60. TACK/BULLETIN BD (TOP OF TRAY MAX 34" AFF.). PROVIDE BACKING PLATES PER 13/6.05.
61. PLATING TABLE, ACCESSIBLE, NIC. PROVIDE 30" H. X 21" H. X 19" D. CLEAR SPACE.
62. NOT USED
63. MIRROR, CFCI
64. NOT USED
65. DOUBLE SINK W/ GARBAGE DISPOSAL
66. INDUSTRIAL STAINLESS STEEL COUNTER AND BASE CABINETS
67. DRY ERASE MARKERBOARD PLAM UPPER CABINETS
68. NOT USED
69. PAPER TOWEL DISPENSER, CFCI
70. NOT USED
71. NOT USED
72. PLAM UPPER CABINET(S) WITH WRITE-ON STRIP
73. PLAM UPPER CABINET W/ OPEN SHELVES
74. DISPLAY UNIT, SEE 6/6.03
75. NOT USED
76. MOVABLE METRO SHELVING, NIC
77. NOT USED
78. NOT USED
79. NOT USED
80. CEILING MOUNTED CURTAIN & TRACK
81. NOT USED
82. NOT USED
83. NOT USED
84. NOT USED
85. NOT USED
86. NOT USED
87. OVERHEAD LIGHT
88. TEACHING WALL, SEE 18/6.05
89. PULMONARY FUNCTION MACHINE, NIC
90. NOT USED
91. NOT USED
92. NOT USED
93. NOT USED
94. O_2/AIR/VACUUM, CFCI
95. NOT USED
96. EXAM TABLE, NIC
97. NOT USED
98. EKG CART, NIC
99. NOT USED
100. NOT USED
101. FLAT PANEL DISPLAY WITH SPEAKER, SHEET AV4.03, NIC
102. WALL MOUNTED CAMERA, SEE SHEET AV4.03, NIC
103. NOT USED
104. SOAP DISPENSER, CFCI
105. NOT USED
106. AV EQUIPMENT RACK, NIC, SEE AV DRAWINGS
107. NOT USED
108. NOT USED
109. NOT USED
110. ACOUSTICAL WALL PANELS
111. "COSENT" HEADWALL W/ ELECT., SIMULATED O2, COMPRESSED AIR & VACUUM OUTLETS. MAX. 4" PROJECTION.
112. "CONTOUR" HEADWALL W/ ELECT., SIMULATED O2, COMPRESSED AIR, & VACUUM OUTLETS MAX. 4" PROJECTION
113. NOT USED
114. NOT USED
115. NOT USED
116. NOT USED
117. NOT USED
118. TACKABLE WALLCOVERING, TMP-1
119. NOT USED
120. FREESTANDING OVERHEAD AND LOWER CABINET UNIT, SEE DETAIL 10/6.03
121. ACCESSIBLE LECTERN, N.I.C. MOBILE, ADJUSTABLE HEIGHT.
122. ALTERNATE #4: FUTURE METAL STUD / GYPSUM BOARD WALL, FUTURE CASEWORK, FUTURE EQUIPMENT, SHOWN DOTTED ON PLAN. SEE FOOD SERVICE DRAWINGS.
123. UNDER-STAIR LIGHT, SEE ELECTRICAL DWGS.
124. ALTERNATE #6: ADD SLOPED FLOOR AT PLANETARIUM. ADD FLOOR RAMPS AT PLANETARIUM VESTIBULES. ADD PLANETARIUM SEATING. CHANGE PLANETARIUM DOORS & FRAMES TO STANDARD HEIGHT. (BASE BID = FLAT FLOOR)
125. ACCESSIBLE DESK. PROVIDE 30" X 48" X 27" H. CLEAR SPACE AND ISA SYMBOL.
126. PROVIDE 4 WHEELCHAIR SPACES, 33" X 48" MIN.
127. 10" DEEP NICHE FOR FLAT PANEL SCREEN. COORDINATE DIMENSIONS AND CONNECTIONS WITH OWNER.

tBP
architecture
planning
interiors
management

LICENSED ARCHITECT
NO. 18024
STATE OF CALIFORNIA

tBP/Architecture
5455 Wilshire Boulevard, Suite 1200
Los Angeles, CA 90036-4242
ph: 323. 556. 3788 fx: 323. 556. 3799

architect

consultant

IDENTIFICATION STAMP
DIV. OF THE STATE ARCHITECT
OFFICE OF REGULATION SERVICES
File No. 19-C11
Appl No. 03-112201
AC ____ FLS ____ SS ____
DATE ____

DSA Los Angeles Basin Regional Office
700 North Alameda Street, Suite 5-500
Los Angeles, California 90012
ph: 213/897-3995 fx: 213/897-3159/0726

agency

ANTELOPE VALLEY COLLEGE HEALTH & SCIENCE BUILDING

ANTELOPE VALLEY COMMUNITY COLLEGE DISTRICT
3041 WEST AVENUE K
LANCASTER, CA 93536-5426

owner

tBP project number : 20641.00
file name: A-0723-EP-NSL.dwg
drawn by: JS checked by: MK
date: JULY 30, 2009 - 100% CD

Rev:	date:	description:
2	2/26/10	ADDENDUM #2

THIS DRAWING AND THE DESIGNS, DEPICTIONS, IDEAS AND OTHER INFORMATION CONTAINED HEREIN CONSTITUTE UNPUBLISHED WORK OF tBP/ARCHITECTURE AND SHALL REMAIN THE PROPERTY OF tBP/ARCHITECTURE IN PERPETUITY. NO PART THEREOF SHALL BE REPRODUCED, DISCLOSED, DISTRIBUTED, SOLD, PUBLISHED OR OTHERWISE USED IN ANY WAY WITHOUT THE ADVANCED EXPRESS WRITTEN CONSENT OF tBP/ARCHITECTURE.

drawing title:
ENL'D NURS SKILLS LAB PLAN & INT ELEVATIONS

drawing no.:
A-7.23
drawing of

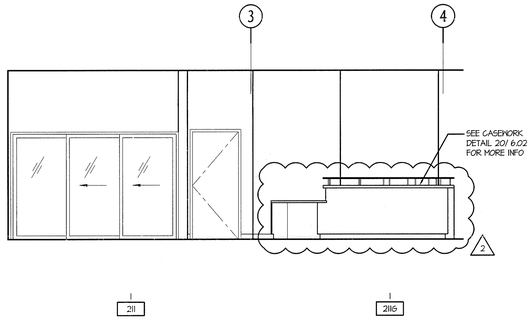

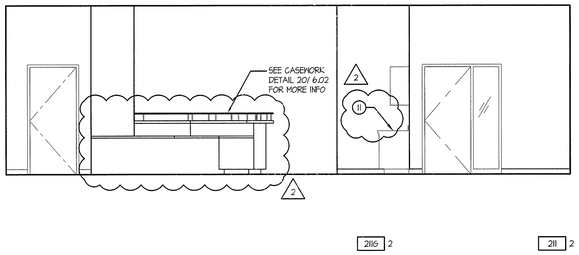

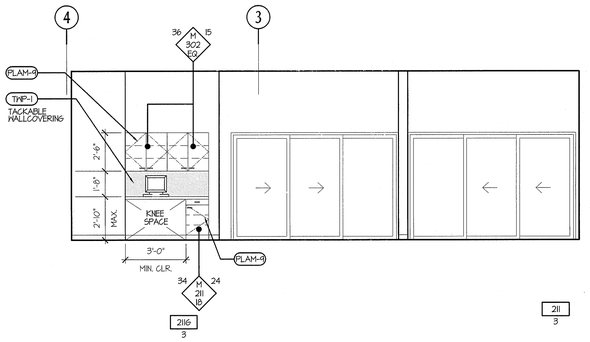

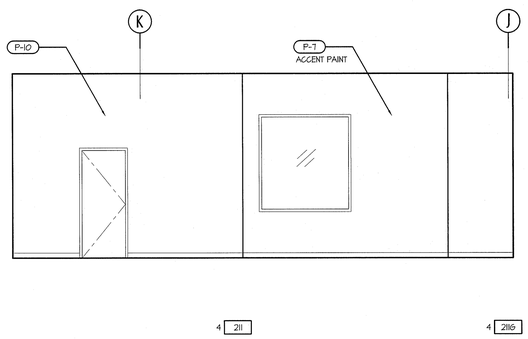

NURSE STATION/ NURSING SIMULATION SUITE INTERIOR ELEVATION
SCALE: 1/4" = 1'-0"

HS 211, 211G

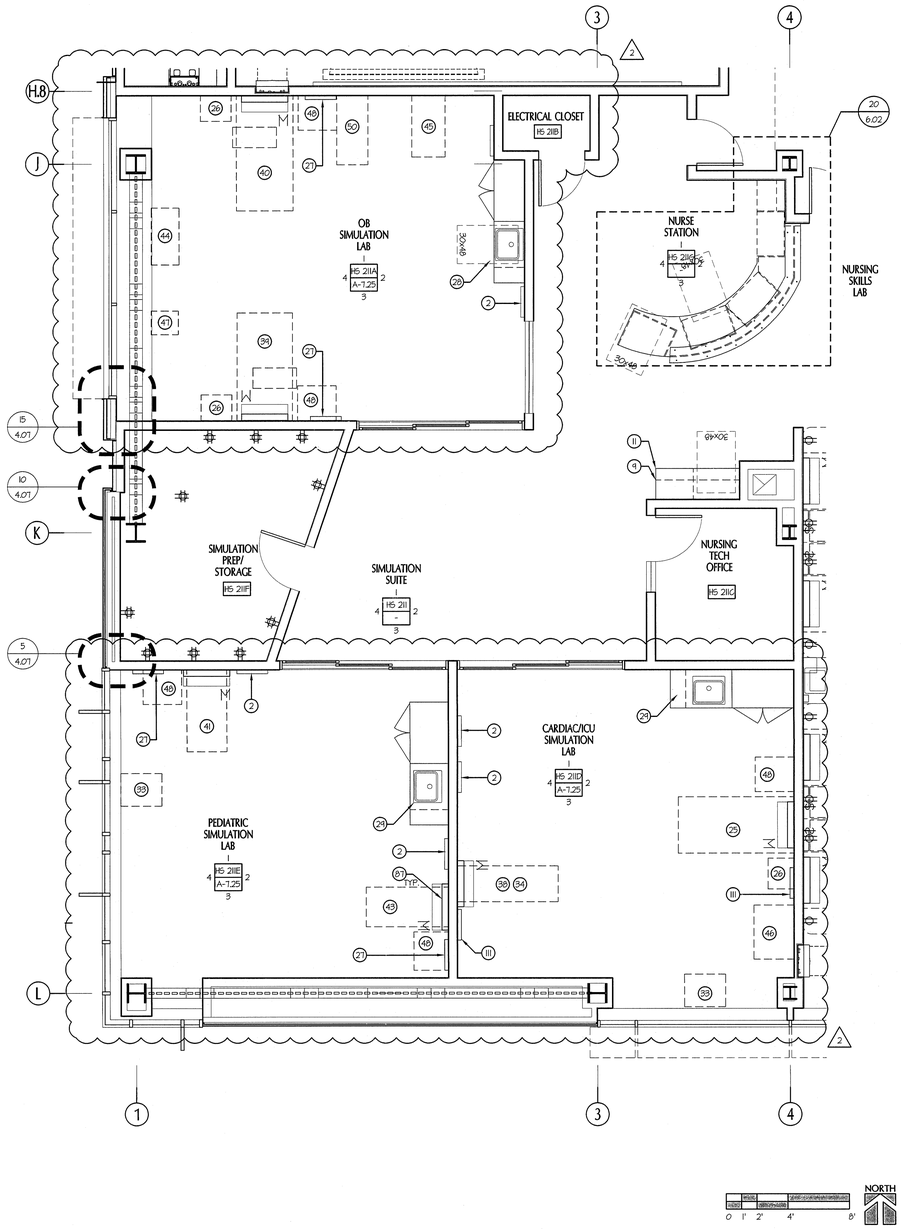

ENLARGED NURSING SIMULATION SUITE - NURSE STATION, CARDIAC/ ICU SIM PLAN
SCALE: 1/4" = 1'-0"

1

GENERAL NOTES

1. KEYNOTES ARE STANDARD FOR ALL INTERIOR ELEVATION AND ENLARGED PLAN DRAWINGS. NOT ALL NOTES USED ON A PARTICULAR SHEET.
2. PROVIDE ADJUSTABLE SHELVES AND LOCKS IN ALL CABINETRY.
3. ALL FIXTURES AND ACCESSORIES ARE ACCESSIBLE UNLESS OTHERWISE NOTED.
4. PROVIDE EQUAL TOLEARANCE AT EACH END OF UPPER & LOWER CABINET RUNS.
5. ALL FIRE ALARM DEVICES & THERMOSTATS TO BE INSTALLED CLEAR OF MARKERBOARD AND TACKBOARDS, TYP.
6. COORDINATE INSTALLATION OF ALL ACOUSTICAL PANELS TO SCRIBE AROUND ALL MARKERBOARS & TACKBOARDS, TYP.

GENERAL KEYNOTES

1. HAND SINK, REGULAR
2. MARKER BD (TOP OF TRAY MAX 34" AFF). PROVIDE BACKING PLATES PER 13/6.05.
3. ACCESSIBLE COMPUTER STATIONS, NIC
4. NOT USED
5. ADJUSTABLE SHELVES
6. RECESSED MOTORIZED PROJECTION SCREEN, SEE AUDIO VISUAL
7. PLAM COUNTERTOP
8. PLAM COUNTERTOP AND BACKSPLASH
9. PLAM UPPER CABINET
10. PLAM COUNTER W/ MANIKIN STORAGE BELOW
11. PLAM COUNTER / CHECK-IN STATION
12. PLAM FULL HEIGHT CABINET
13. PLAM ACCESSIBLE CABINET DOORS WITH KICK
14. PLAM UPPER CABINET(S) W/ WHITEBOARD FACE
15. PLAM UPPER CABINET(S) WITH MAIL BOXES
16. NOT USED
17. WALL MOUNT MEDIA BOX - SEE AUDIO VISUAL DWGS. MAX 4" PROJECTION OR MAX. 21" AFF TO BOTTOM, NIC
18. NOT USED
19. NOT USED
20. EQUIPMENT CLOSET
21. NOT USED
22. RUBBER BASE
23. NOT USED
24. NOT USED
25. HOSPITAL BED WITH OVERBED TRAY TABLE, NIC
26. BEDSIDE TABLE/ NIGHT STAND, NIC
27. (E) RELOCATED "COSENT" HEADWALL W/ ELECT., O2, COMPRESSED AIR, & VACUUM
28. HAND SINK W/ ELECTRONIC SENSOR
29. HAND SINK SINK W/ FOOT PEDAL
30. NOT USED
31. NOT USED
32. NOT USED
33. MED CART, NIC
34. AMBULANCE GURNEY, NIC
35. NOT USED
36. NOT USED
37. NOT USED
38. 9.5 M MAN MANIKEN
39. DELIVERY BED, NIC
40. POST PARTUM BED, NIC
41. PEDIATRIC CRIB, NIC
42. PEDIATRIC MONITOR
43. CHILD CRIB, NIC
44. ISOLETTE, NIC
45. L/D WARMER, NIC
46. CRASH CART, NIC
47. FETAL MONITOR/ CART, NIC
48. COMPRESSOR, NIC
49. DESK, NIC
50. WARMER / BASSINET, NIC
51. SKELETON ON A STAND, NIC
52. COPIER / PRINTER, NIC
53. ICE MAKER, NIC
54. NOT USED
55. COMMERCIAL REFRIGERATOR, CFCI
56. COMMERCIAL FREEZER, CFCI
57. LOCKERS, CFCI. PROVIDE BACKING PLATE PER 20/6.05, FLOOR ANCHORAGE PER 18/6.05.
58. WASHER, FRONT-LOADING, CFCI
59. DRYER, FRONT-LOADING, CFCI
60. TACK/BULLETIN BD (TOP OF TRAY MAX 34" AFF.). PROVIDE BACKING PLATES PER 13/6.05.
61. PLATING TABLE, ACCESSIBLE, NIC. PROVIDE 30" W. X 27" H. X 19" D. CLEAR SPACE.
62. NOT USED
63. MIRROR, CFCI
64. NOT USED
65. DOUBLE SINK W/ GARBAGE DISPOSAL
66. INDUSTRIAL STAINLESS STEEL COUNTER AND BASE CABINETS
67. DRY ERASE MARKERBOARD PLAM UPPER CABINETS
68. NOT USED
69. PAPER TOWEL DISPENSER, CFCI
70. NOT USED
71. NOT USED
72. PLAM UPPER CABINET(S) WITH WRITE-ON STRIP
73. PLAM UPPER CABINET W/ OPEN SHELVES
74. DISPLAY UNIT, SEE 6/6.03
75. NOT USED
76. MOVABLE METRO SHELVING, NIC
77. NOT USED
78. NOT USED
79. NOT USED
80. CEILING MOUNTED CURTAIN & TRACK
81. NOT USED
82. NOT USED
83. NOT USED
84. NOT USED
85. NOT USED
86. NOT USED
87. OVERHEAD LIGHT
88. TEACHING WALL, SEE 18/6.05
89. PULMONARY FUNCTION MACHINE, NIC
90. NOT USED
91. NOT USED
92. NOT USED
93. NOT USED
94. O_2/AIR/VACUUM, CFCI
95. NOT USED
96. EXAM TABLE, NIC
97. NOT USED
98. EKG CART, NIC
99. NOT USED
100. NOT USED
101. FLAT PANEL DISPLAY WITH SPEAKER, SHEET AV4.03, NIC
102. WALL MOUNTED CAMERA, SEE SHEET AV4.03, NIC
103. NOT USED
104. SOAP DISPENSER, CFCI
105. NOT USED
106. AV EQUIPMENT RACK, NIC, SEE AV DRAWINGS
107. NOT USED
108. NOT USED
109. NOT USED
110. ACOUSTICAL WALL PANELS
111. "COSENT" HEADWALL W/ ELECT., SIMULATED O2, COMPRESSED AIR & VACUUM OUTLETS. MAX. 4" PROJECTION.
112. "CONTOUR" HEADWALL W/ ELECT., SIMULATED O2, COMPRESSED AIR, & VACUUM OUTLETS MAX. 4" PROJECTION
113. NOT USED
114. NOT USED
115. NOT USED
116. NOT USED
117. NOT USED
118. TACKABLE WALLCOVERING, TWP-1
119. NOT USED
120. FREESTANDING OVERHEAD AND LOWER CABINET UNIT, SEE DETAIL 10/6.03
121. ACCESSIBLE LECTERN, N.I.C. MOBILE, ADJUSTABLE HEIGHT.
122. ALTERNATE #4: FUTURE METAL STUD / GYPSUM BOARD WALL, FUTURE CASEWORK, FUTURE EQUIPMENT, SHOWN DOTTED ON PLAN. SEE FOOD SERVICE DRAWINGS.
123. UNDER-STAIR LIGHT, SEE ELECTRICAL DWGS.
124. ALTERNATE #6: ADD SLOPED FLOOR AT PLANETARIUM. ADD FLOOR RAMPS AT PLANETARIUM VESTIBULES. ADD PLANETARIUM SEATING. CHANGE PLANETARIUM DOORS & FRAMES TO STANDARD HEIGHT. (BASE BID = FLAT FLOOR)
125. ACCESSIBLE DESK. PROVIDE 30" X 48" X 27" H. CLEAR SPACE AND ISA SYMBOL.
126. PROVIDE 4 WHEELCHAIR SPACES, 33" X 48" MIN.
127. 10" DEEP NICHE FOR FLAT PANEL SCREEN. COORDINATE DIMENSIONS AND CONNECTIONS WITH OWNER.

tBP
architecture
planning
interiors
management

tBP/Architecture
5455 Wilshire Boulevard, Suite 1200
Los Angeles, CA 90036-4242
ph: 323. 556. 3788 fx: 323. 556. 3799

LICENSED ARCHITECT
STEPHEN C. TAN
NO. 18317
STATE OF CALIFORNIA

architect

consultant

IDENTIFICATION STAMP
DIV. OF THE STATE ARCHITECT
OFFICE OF REGULATION SERVICES
File No. 19-C11
Appl No. 03-112201
AC ____ RS ____ SS ____
DATE ____

DSA Los Angeles Basin Regional Office
700 North Alameda Street, Suite 5-500
Los Angeles, California 90012
ph: 213/897-3995 fx: 213/897-3159/0726

agency

ANTELOPE VALLEY COLLEGE HEALTH & SCIENCE BUILDING

ANTELOPE VALLEY COMMUNITY COLLEGE DISTRICT
3041 WEST AVENUE K
LANCASTER, CA 93536-5426

owner

tBP project number : 20641.00
file name: A-0724-EP-SIM.dwg
drawn by: JS checked by: MK
date: JULY 30, 2009 - 100% CD

Rev:	date:	description:
2	2/26/10	ADDENDUM #2

THIS DRAWING AND THE DESIGNS, DEPICTIONS, IDEAS AND OTHER INFORMATION CONTAINED HEREIN CONSTITUTE UNPUBLISHED WORK OF tBP/ARCHITECTURE AND SHALL REMAIN THE PROPERTY OF tBP/ARCHITECTURE IN PERPETUITY. NO PART THEREOF SHALL BE REPRODUCED, DISCLOSED, DISTRIBUTED, SOLD, PUBLISHED OR OTHERWISE USED IN ANY WAY WITHOUT THE ADVANCED EXPRESS WRITTEN CONSENT OF tBP/ARCHITECTURE.

drawing title:
ENL'D SIMULATION SUITE PLAN & INT ELEVATIONS

drawing no.:
A-7.24

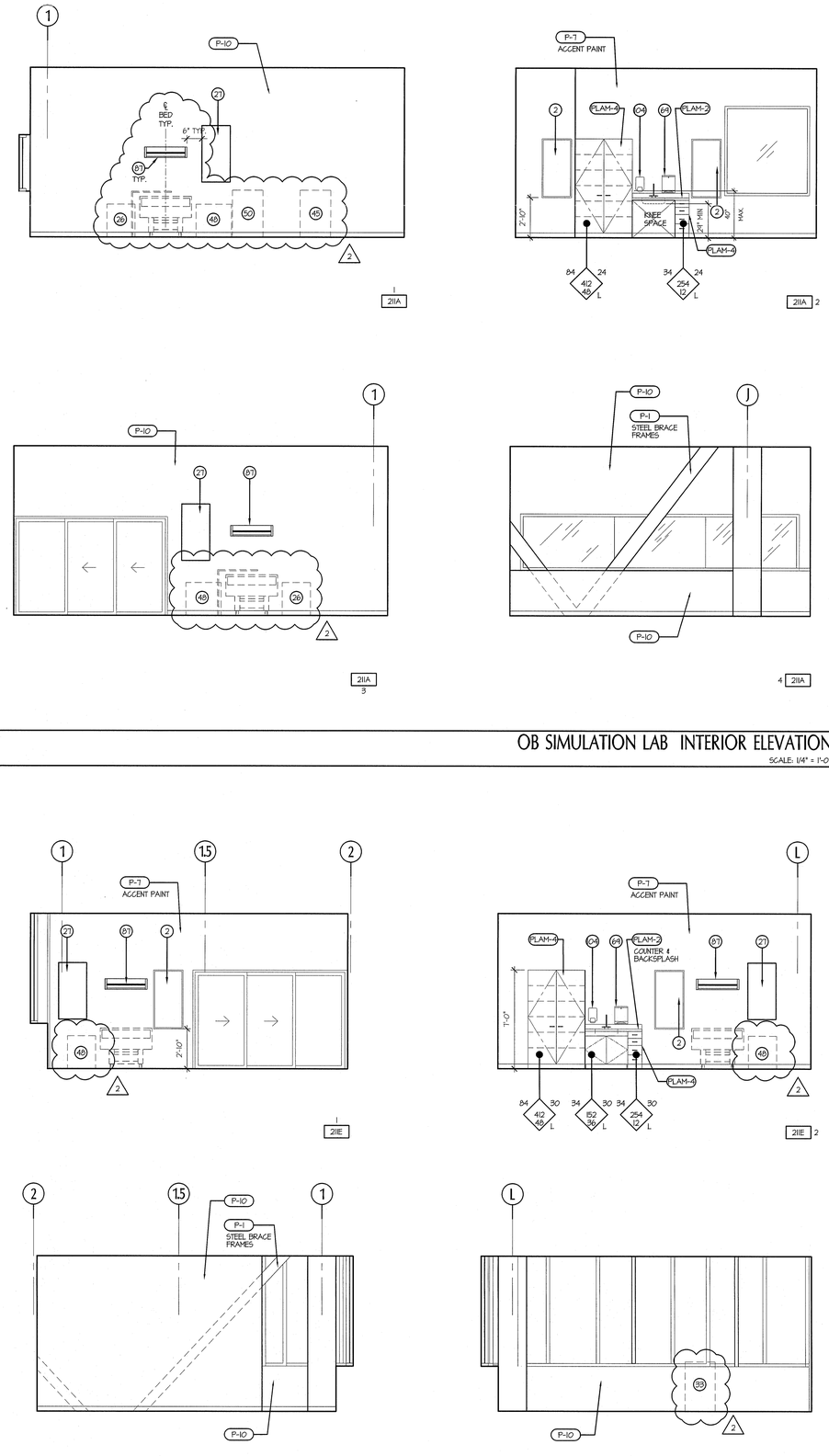

OB SIMULATION LAB INTERIOR ELEVATION
SCALE: 1/4" = 1'-0"

HS 211A

PEDIATRIC SIMULATION LAB INTERIOR ELEVATION
SCALE: 1/4" = 1'-0"

HS 211E

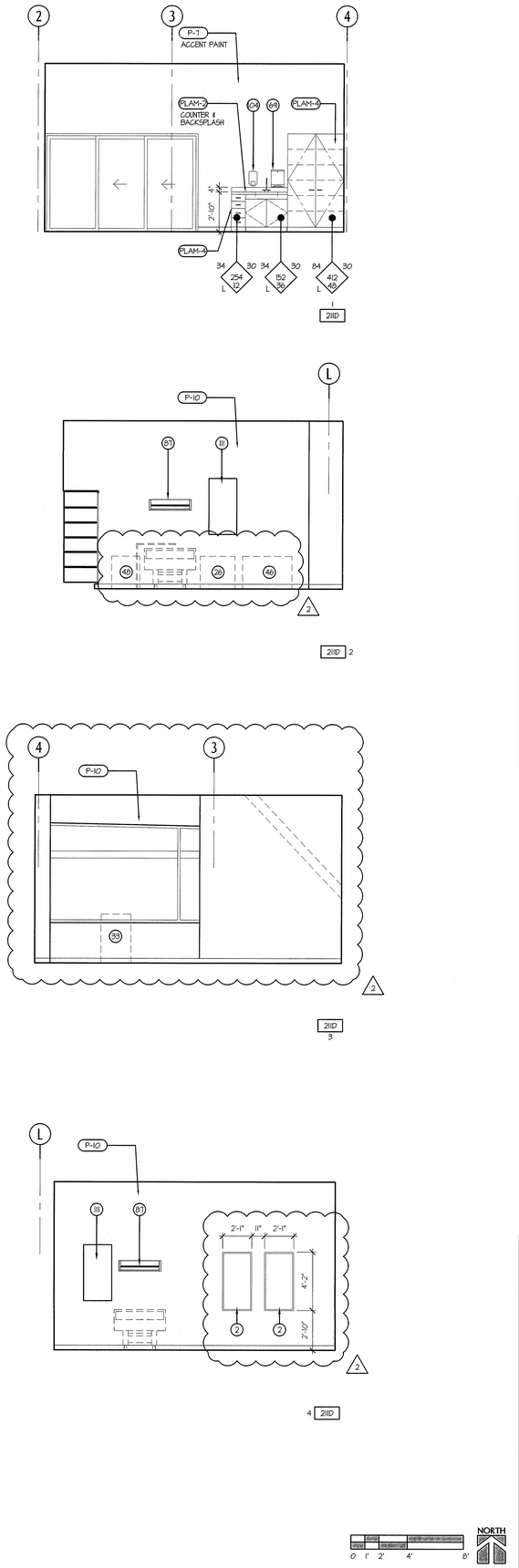

CARDIAC/ ICU SIMULATION LAB INTERIOR ELEVATION
SCALE: 1/4" = 1'-0"

HS 211D

GENERAL NOTES

1. KEYNOTES ARE STANDARD FOR ALL INTERIOR ELEVATION AND ENLARGED PLAN DRAWINGS. NOT ALL NOTES USED ON A PARTICULAR SHEET.
2. PROVIDE ADJUSTABLE SHELVES AND LOCKS IN ALL CABINETRY.
3. ALL FIXTURES AND ACCESSORIES ARE ACCESSIBLE UNLESS OTHERWISE NOTED.
4. PROVIDE EQUAL TOLERANCE AT EACH END OF UPPER & LOWER CABINET RUNS.
5. ALL FIRE ALARM DEVICES & THERMOSTATS TO BE INSTALLED CLEAR OF MARKERBOARD AND TACKBOARDS, TYP.
6. COORDINATE INSTALLATION OF ALL ACOUSTICAL PANELS TO SCRIBE AROUND ALL MARKERBOARD & TACKBOARDS, TYP.

GENERAL KEYNOTES

1. HAND SINK, REGULAR
2. MARKER BD (TOP OF TRAY MAX 34" AFF). PROVIDE BACKING PLATES PER 13/6.05.
3. ACCESSIBLE COMPUTER STATIONS, NIC
4. NOT USED
5. ADJUSTABLE SHELVES (2)
6. RECESSED MOTORIZED PROJECTION SCREEN, SEE AUDIO VISUAL
7. PLAM COUNTERTOP
8. PLAM COUNTERTOP AND BACKSPLASH
9. PLAM UPPER CABINET
10. PLAM COUNTER W/ MANIKIN STORAGE BELOW
11. PLAM COUNTER / CHECK-IN STATION
12. PLAM FULL HEIGHT CABINET
13. PLAM ACCESSIBLE CABINET DOORS WITH KICK
14. PLAM UPPER CABINET(S) W/ WHITEBOARD FACE
15. PLAM UPPER CABINET(S) WITH MAIL BOXES
16. NOT USED
17. WALL MOUNT MEDIA BOX - SEE AUDIO VISUAL DWGS. MAX 4" PROJECTION OR MAX. 21" AFF TO BOTTOM, NIC.
18. NOT USED
19. NOT USED (2)
20. EQUIPMENT CLOSET
21. NOT USED
22. RUBBER BASE (2)
23. NOT USED
24. NOT USED (2)
25. HOSPITAL BED WITH OVERBED TRAY TABLE, NIC
26. BEDSIDE TABLE/ NIGHT STAND, NIC
27. (E) RELOCATED "COSENT" HEADWALL W/ ELECT., O2, COMPRESSED AIR, & VACUUM
28. HAND SINK W/ ELECTRONIC SENSOR
29. HAND SINK SINK W/ FOOT PEDAL
30. NOT USED
31. NOT USED
32. NOT USED (2)
33. MED CART, NIC
34. AMBULANCE GURNEY, NIC
35. NOT USED
36. NOT USED
37. NOT USED (2)
38. 95 H MAN MANIKEN
39. DELIVERY BED, NIC
40. POST PARTUM BED, NIC
41. PEDIATRIC CRIB, NIC
42. PEDIATRIC MONITOR
43. CHILD CRIB, NIC
44. ISOLETTE, NIC
45. L/D WARMER, NIC
46. CRASH CART, NIC
47. FETAL MONITOR/ CART, NIC
48. COMPRESSOR, NIC
49. DESK, NIC
50. WARMER / BASSINET, NIC
51. SKELETON ON A STAND, NIC
52. COPIER / PRINTER, NIC
53. ICE MAKER, NIC (2)
54. NOT USED
55. COMMERCIAL REFRIGERATOR, CFCI
56. COMMERICAL FREEZER, CFCI
57. LOCKERS, CFCI. PROVIDE BACKING PLATE PER 20/6.05, FLOOR ANCHORAGE PER 18/6.05.
58. WASHER, FRONT-LOADING, CFCI
59. DRYER, FRONT-LOADING, CFCI (2)
60. TACK/BULLETIN BD (TOP OF TRAY MAX 34" AFF.). PROVIDE BACKING PLATES PER 8/6.05
61. PLATING TABLE, ACCESSIBLE, NIC. PROVIDE 30" H. X 27" H. X 19" D. CLEAR SPACE.
62. NOT USED
63. MIRROR, CFCI (2)
64. NOT USED
65. DOUBLE SINK W/ GARBAGE DISPOSAL
66. INDUSTRIAL STAINLESS STEEL COUNTER AND BASE CABINETS
67. DRY ERASE MARKERBOARD PLAM UPPER CABINETS
68. NOT USED
69. PAPER TOWEL DISPENSER, OFCI (2)
70. NOT USED
71. NOT USED
72. PLAM UPPER CABINET(S) WITH WRITE-ON STRIP
73. PLAM UPPER CABINET W/ OPEN SHELVES
74. DISPLAY UNIT, SEE 6/6.03
75. NOT USED
76. MOVABLE METRO SHELVING, NIC (2)
77. NOT USED
78. NOT USED
79. NOT USED
80. CEILING MOUNTED CURTAIN & TRACK
81. NOT USED
82. NOT USED (2)
83. NOT USED
84. NOT USED
85. NOT USED
86. NOT USED
87. OVERHEAD LIGHT
88. TEACHING WALL, SEE 18/6.05 (2)
89. PULMONARY FUNCTION MACHINE, NIC
90. NOT USED
91. NOT USED
92. NOT USED
93. NOT USED (2)
94. O_2/AIR/VACUUM, OFCI
95. NOT USED
96. EXAM TABLE, NIC
97. NOT USED
98. EKG CART, NIC
99. NOT USED
100. NOT USED (2)
101. FLAT PANEL DISPLAY WITH SPEAKER, SHEET AV4.03, NIC
102. WALL MOUNTED CAMERA, SEE SHEET AV4.03, NIC
103. NOT USED
104. SOAP DISPENSER, OFCI
105. NOT USED
106. AV EQUIPMENT RACK, NIC, SEE AV DRAWINGS
107. NOT USED
108. NOT USED
109. NOT USED
110. ACOUSTICAL WALL PANELS
111. "COSENT" HEADWALL W/ ELECT., SIMULATED O2, COMPRESSED AIR & VACUUM OUTLETS. MAX. 4" PROJECTION.
112. "CONTOUR" HEADWALL W/ ELECT., SIMULATED O2, COMPRESSED AIR, & VACUUM OUTLETS MAX. 4" PROJECTION
113. NOT USED
114. NOT USED
115. NOT USED (2) (1)
116. NOT USED
117. NOT USED
118. TACKABLE WALLCOVERING, TNP-1 (2)
119. NOT USED
120. FREESTANDING OVERHEAD AND LOWER CABINET UNIT, SEE DETAIL 10/6.03
121. ACCESSIBLE LECTERN, N.I.C. MOBILE, ADJUSTABLE HEIGHT.
122. ALTERNATE #4: FUTURE METAL STUD / GYPSUM BOARD WALL, FUTURE CASEWORK, FUTURE EQUIPMENT, SHOWN DOTTED ON PLAN. SEE FOOD SERVICE DRAWINGS.
123. UNDER-STAIR LIGHT, SEE ELECTRICAL DWGS.
124. ALTERNATE #6: ADD SLOPED FLOOR AT PLANETARIUM. ADD FLOOR RAMPS AT PLANETARIUM VESTIBULES. ADD PLANETARIUM SEATING. CHANGE PLANETARIUM DOORS & FRAMES TO STANDARD HEIGHT. (BASE BID = FLAT FLOOR)
125. ACCESSIBLE DESK. PROVIDE 30" X 48" X 27" H. CLEAR SPACE AND ISA SYMBOL.
126. PROVIDE 4 WHEELCHAIR SPACES, 33" X 48" MIN.
127. 10" DEEP NICHE FOR FLAT PANEL SCREEN. COORDINATE DIMENSIONS AND CONNECTIONS WITH OWNER.

tBP
architecture
planning
interiors
management

LICENSED ARCHITECT
NO. C-29711
REN. 4-30-11
STATE OF CALIFORNIA

tBP/Architecture
5455 Wilshire Boulevard, Suite 1200
Los Angeles, CA 90036-4242
ph: 323. 556. 3788 fx: 323. 556. 3799

architect

consultant

IDENTIFICATION STAMP
DIV. OF THE STATE ARCHITECT
OFFICE OF REGULATION SERVICES
File No. 19-C11
Appl No. 03-112201
AC ____ FLS ____ SS ____
DATE ____

DSA Los Angeles Basin Regional Office
700 North Alameda Street, Suite 5-500
Los Angeles, California 90012
ph: 213/897-3995 fx: 213/897-3159/0726

agency

ANTELOPE VALLEY COLLEGE HEALTH & SCIENCE BUILDING

ANTELOPE VALLEY COMMUNITY COLLEGE DISTRICT
3041 WEST AVENUE K
LANCASTER, CA 93536-5426

owner

tBP project number : 206411.00
file name: A-0125-EP-SIM.dwg
drawn by: JS checked by: MK
date: JULY 30, 2009 - 100% CD

Rev:	date:	description:
2	2/26/10	ADDENDUM #2

THIS DRAWING AND THE DESIGNS, DEPICTIONS, IDEAS AND OTHER INFORMATION CONTAINED HEREIN CONSTITUTE UNPUBLISHED WORK OF tBP/ARCHITECTURE AND SHALL REMAIN THE PROPERTY OF tBP/ARCHITECTURE IN PERPETUITY. NO PART THEREOF SHALL BE REPRODUCED, DISCLOSED, DISTRIBUTED, SOLD, PUBLISHED OR OTHERWISE USED IN ANY WAY WITHOUT THE ADVANCED EXPRESS WRITTEN CONSENT OF tBP/ARCHITECTURE.

drawing title:
ENL'D SIMULATION SUITE PLAN & INT ELEVATIONS

drawing no.:
A-7.25
drawing of

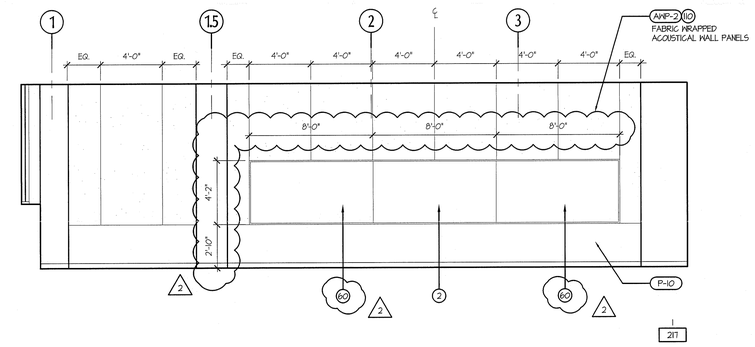

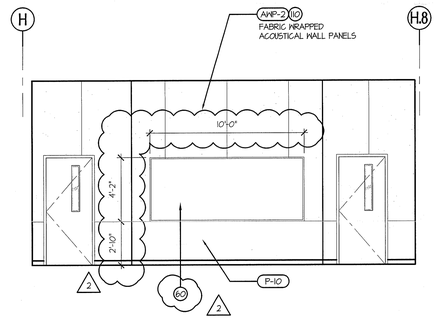

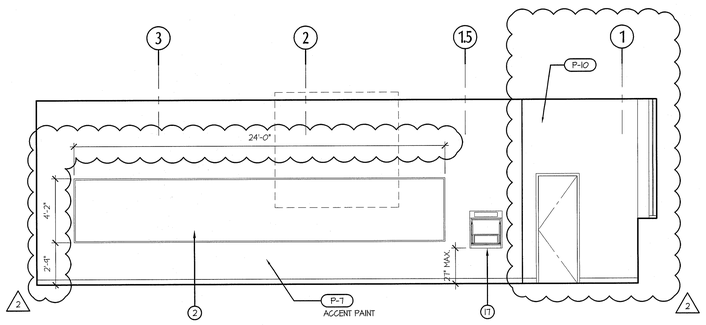

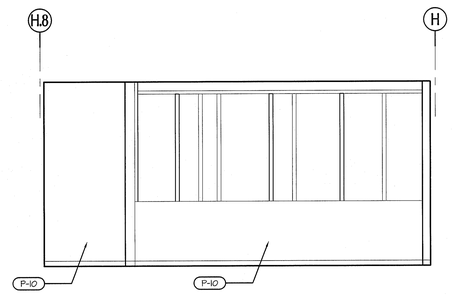

CLASSROOM INTERIOR ELEVATION

SCALE: 1/4" = 1'-0"

HS 217

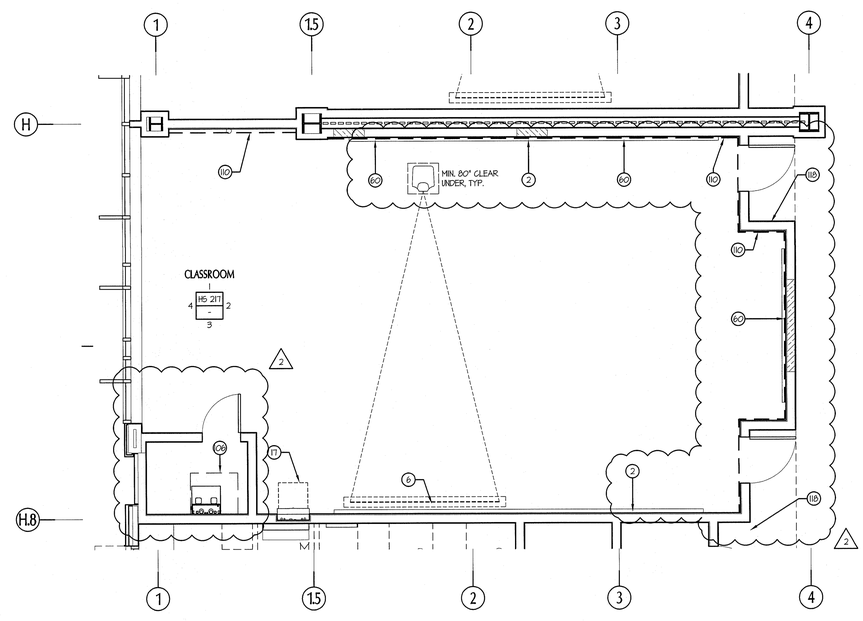

ENLARGED CLASSROOM PLAN

SCALE: 1/4" = 1'-0"

1

GENERAL NOTES

1. KEYNOTES ARE STANDARD FOR ALL INTERIOR ELEVATION AND ENLARGED PLAN DRAWINGS. NOT ALL NOTES USED ON A PARTICULAR SHEET.
2. PROVIDE ADJUSTABLE SHELVES AND LOCKS IN ALL CABINETRY.
3. ALL FIXTURES AND ACCESSORIES ARE ACCESSIBLE UNLESS OTHERWISE NOTED.
4. PROVIDE EQUAL TOLEARANCE AT EACH END OF UPPER & LOWER CABINET RUNS.
5. ALL FIRE ALARM DEVICES & THERMOSTATS TO BE INSTALLED CLEAR OF MARKERBOARD AND TACKBOARDS, TYP.
6. COORDINATE INSTALLATION OF ALL ACOUSTICAL PANELS TO SCRIBE AROUND ALL MARKERBOARS & TACKBOARDS, TYP.

GENERAL KEYNOTES

1. HAND SINK, REGULAR
2. MARKER BD (TOP OF TRAY MAX 34" AFF). PROVIDE BACKING PLATES PER 13/6.05.
3. ACCESSIBLE COMPUTER STATIONS, NIC
4. NOT USED
5. ADJUSTABLE SHELVES
6. RECESSED MOTORIZED PROJECTION SCREEN, SEE AUDIO VISUAL
7. PLAM COUNTERTOP
8. PLAM COUNTERTOP AND BACKSPLASH
9. PLAM UPPER CABINET
10. PLAM COUNTER W/ MANIKIN STORAGE BELOW
11. PLAM COUNTER / CHECK-IN STATION
12. PLAM FULL HEIGHT CABINET
13. PLAM ACCESSIBLE CABINET DOORS WITH KICK
14. PLAM UPPER CABINET(S) W/ WHITEBOARD FACE
15. PLAM UPPER CABINET(S) WITH MAIL BOXES
16. NOT USED
17. WALL MOUNT MEDIA BOX - SEE AUDIO VISUAL DWGS. MAX 4" PROJECTION OR MAX. 27" AFF TO BOTTOM, NIC
18. NOT USED
19. NOT USED
20. EQUIPMENT CLOSET
21. NOT USED
22. RUBBER BASE
23. NOT USED
24. NOT USED
25. HOSPITAL BED WITH OVERBED TRAY TABLE, NIC
26. BEDSIDE TABLE/ NIGHT STAND, NIC
27. (E) RELOCATED "COSENT" HEADWALL W/ ELECT., O2, COMPRESSED AIR, & VACUUM
28. HAND SINK W/ ELECTRONIC SENSOR
29. HAND SINK SINK W/ FOOT PEDAL
30. NOT USED
31. NOT USED
32. NOT USED
33. MED CART, NIC
34. AMBULANCE BURNEY, NIC
35. NOT USED
36. NOT USED
37. NOT USED
38. 1.5 M MAN MANIKEN
39. DELIVERY BED, NIC
40. POST PARTUM BED, NIC
41. PEDIATRIC CRIB, NIC
42. PEDIATRIC MONITOR
43. CHILD CRIB, NIC
44. ISOLETTE, NIC
45. L/D WARMER, NIC
46. CRASH CART, NIC
47. FETAL MONITOR/ CART, NIC
48. COMPRESSOR, NIC
49. DESK, NIC
50. WARMER / BASSINET, NIC
51. SKELETON ON A STAND, NIC
52. COPIER / PRINTER, NIC
53. ICE MAKER, NIC
54. NOT USED
55. COMMERCIAL REFRIGERATOR, CFCI
56. COMMERICAL FREEZER, CFCI
57. LOCKERS, CFCI. PROVIDE BACKING PLATE PER 20/6.05, FLOOR ANCHORAGE PER 18/6.05.
58. WASHER, FRONT-LOADING, CFCI
59. DRYER, FRONT-LOADING, CFCI
60. TACK/BULLETIN BD (TOP OF TRAY MAX 34" AFF.). PROVIDE BACKING PLATES PER 13/6.05.
61. PLATING TABLE, ACCESSIBLE, NIC. PROVIDE 30" H. X 27" H. X 19" D. CLEAR SPACE.
62. NOT USED
63. MIRROR, CFCI
64. NOT USED
65. DOUBLE SINK W/ GARBAGE DISPOSAL
66. INDUSTRIAL STAINLESS STEEL COUNTER AND BASE CABINETS
67. DRY ERASE MARKERBOARD PLAM UPPER CABINETS
68. NOT USED
69. PAPER TOWEL DISPENSER, CFCI
70. NOT USED
71. NOT USED
72. PLAM UPPER CABINET(S) WITH WRITE-ON STRIP
73. PLAM UPPER CABINET W/ OPEN SHELVES
74. DISPLAY UNIT, SEE 6/6.03
75. NOT USED
76. MOVABLE METRO SHELVING, NIC
77. NOT USED
78. NOT USED
79. NOT USED
80. CEILING MOUNTED CURTAIN & TRACK
81. NOT USED
82. NOT USED
83. NOT USED
84. NOT USED
85. NOT USED
86. NOT USED
87. OVERHEAD LIGHT
88. TEACHING WALL, SEE 18/6.05
89. PULMONARY FUNCTION MACHINE, NIC
90. NOT USED
91. NOT USED
92. NOT USED
93. NOT USED
94. O_2/AIR/VACUUM, CFCI
95. NOT USED
96. EXAM TABLE, NIC
97. NOT USED
98. EKG CART, NIC
99. NOT USED
100. NOT USED
101. FLAT PANEL DISPLAY WITH SPEAKER, SHEET AV4.03, NIC
102. WALL MOUNTED CAMERA, SEE SHEET AV4.03, NIC
103. NOT USED
104. SOAP DISPENSER, CFCI
105. NOT USED
106. AV EQUIPMENT RACK, NIC, SEE AV DRAWINGS
107. NOT USED
108. NOT USED
109. NOT USED
110. ACOUSTICAL WALL PANELS
111. "COSENT" HEADWALL W/ ELECT., SIMULATED O2, COMPRESSED AIR & VACUUM OUTLETS. MAX. 4" PROJECTION.
112. "CONTOUR" HEADWALL W/ ELECT., SIMULATED O2, COMPRESSED AIR, & VACUUM OUTLETS MAX. 4" PROJECTION
113. NOT USED
114. NOT USED
115. NOT USED
116. NOT USED
117. NOT USED
118. TACKABLE WALLCOVERING, TWP-1
119. NOT USED
120. FREESTANDING OVERHEAD AND LOWER CABINET UNIT, SEE DETAIL 10/6.03
121. ACCESSIBLE LECTERN, N.I.C. MOBILE, ADJUSTABLE HEIGHT.
122. ALTERNATE #4: FUTURE METAL STUD / GYPSUM BOARD WALL, FUTURE CASEWORK, FUTURE EQUIPMENT, SHOWN DOTTED ON PLAN. SEE FOOD SERVICE DRAWINGS.
123. UNDER-STAIR LIGHT, SEE ELECTRICAL DWGS.
124. ALTERNATE #6: ADD SLOPED FLOOR AT PLANETARIUM. ADD FLOOR RAMPS AT PLANETARIUM VESTIBULES. ADD PLANETARIUM SEATING. CHANGE PLANETARIUM DOORS & FRAMES TO STANDARD HEIGHT. (BASE BID = FLAT FLOOR)
125. ACCESSIBLE DESK. PROVIDE 30" X 48" X 27" H. CLEAR SPACE AND ISA SYMBOL.
126. PROVIDE 4 WHEELCHAIR SPACES, 33" X 48" MIN.
127. 10" DEEP NICHE FOR FLAT PANEL SCREEN. COORDINATE DIMENSIONS AND CONNECTIONS WITH OWNER.

tBP
architecture
planning
interiors
management

LICENSED ARCHITECT
JOHN TAN
No. 19-C11
Exp. 4-30-11
STATE OF CALIFORNIA

tBP/Architecture
5455 Wilshire Boulevard, Suite 1200
Los Angeles, CA 90036-4242
ph: 323. 556. 3788 fx: 323. 556. 3799

architect

consultant

IDENTIFICATION STAMP
DIV. OF THE STATE ARCHITECT
OFFICE OF REGULATION SERVICES
File No. 19-C11
Appl No. 03-112201
AC _____ RS _____ SS _____
DATE _____

DSA Los Angeles Basin Regional Office
700 North Alameda Street, Suite 5-500
Los Angeles, California 90012
ph: 213/897-3995 fx: 213/897-3159/0726

agency

ANTELOPE VALLEY COLLEGE HEALTH & SCIENCE BUILDING

ANTELOPE VALLEY COMMUNITY COLLEGE DISTRICT
3041 WEST AVENUE K
LANCASTER, CA 93536-5426

owner

tBP project number : 20641.00
file name: A-0726-EP-CLA.dwg
drawn by: JS checked by: MK
date: JULY 30, 2009 - 100% CD

Rev:	date:	description:
2	2/26/10	ADDENDUM #2

THIS DRAWING AND THE DESIGNS, DEPICTIONS, IDEAS AND OTHER INFORMATION CONTAINED HEREIN CONSTITUTE UNPUBLISHED WORK OF tBP/ARCHITECTURE AND SHALL REMAIN THE PROPERTY OF tBP/ARCHITECTURE IN PERPETUITY. NO PART THEREOF SHALL BE REPRODUCED, DISCLOSED, DISTRIBUTED, SOLD, PUBLISHED OR OTHERWISE USED IN ANY WAY WITHOUT THE ADVANCED EXPRESS WRITTEN CONSENT OF tBP/ARCHITECTURE.

drawing title:
ENLARGED CLASSROOM PLAN & INT ELEVATIONS

drawing no.:
A-7.26
drawing of

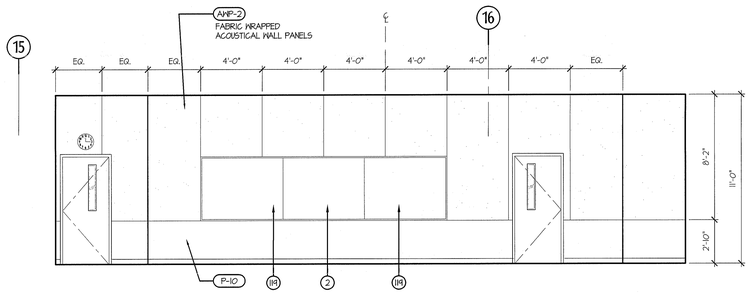

1
261

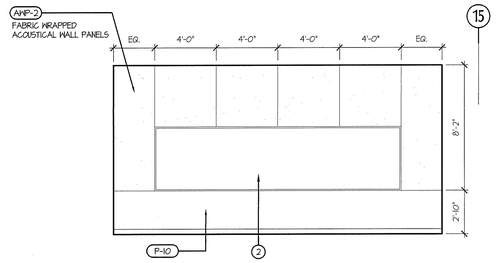

4
261

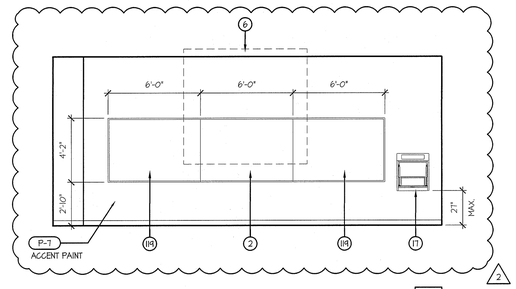

261
3

CLASSROOM INTERIOR ELEVATION

SCALE: 1/4" = 1'-0"

HS 261

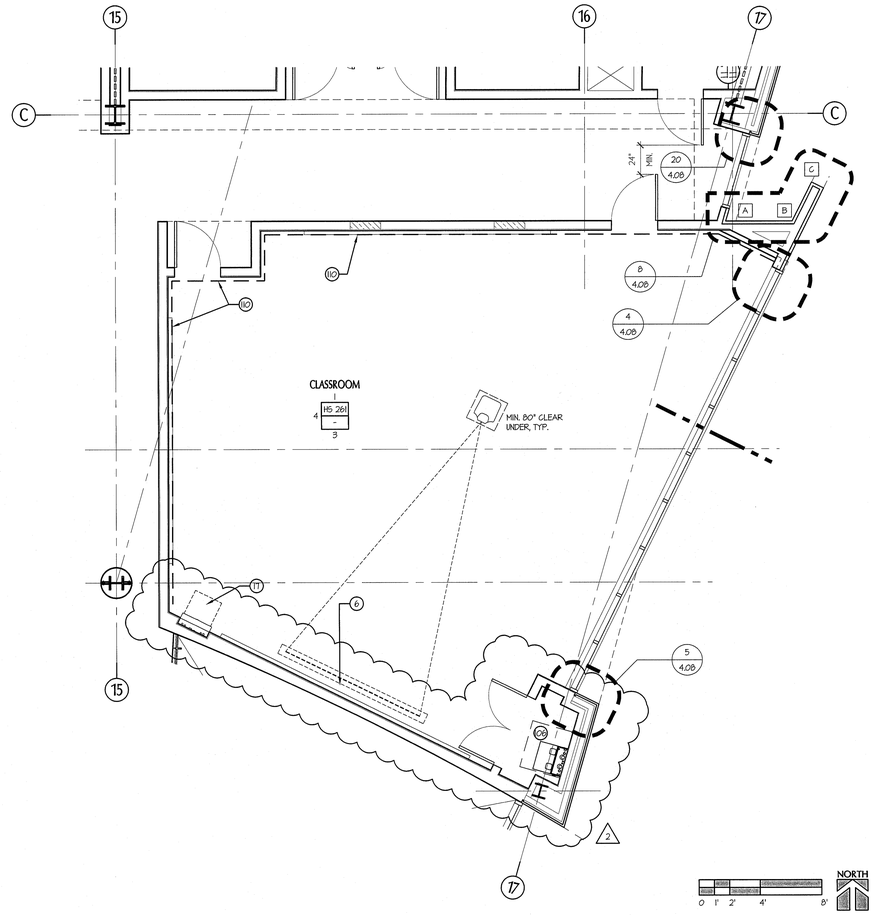

ENLARGED CLASSROOM PLAN

SCALE: 1/4" = 1'-0"

1

GENERAL NOTES

1. KEYNOTES ARE STANDARD FOR ALL INTERIOR ELEVATION AND ENLARGED PLAN DRAWINGS. NOT ALL NOTES USED ON A PARTICULAR SHEET.
2. PROVIDE ADJUSTABLE SHELVES AND LOGOS IN ALL CABINETRY.
3. ALL FIXTURES AND ACCESSORIES ARE ACCESSIBLE UNLESS OTHERWISE NOTED.
4. PROVIDE EQUAL TOLERANCE AT EACH END OF UPPER & LOWER CABINET RUNS.
5. ALL FIRE ALARM DEVICES & THERMOSTATS TO BE INSTALLED CLEAR OF MARKERBOARD AND TACKBOARDS, TYP.
6. COORDINATE INSTALLATION OF ALL ACOUSTICAL PANELS TO SCRIBE AROUND ALL MARKERBOARDS & TACKBOARDS, TYP.

GENERAL KEYNOTES

1. HAND SINK, REGULAR
2. MARKER BD (TOP OF TRAY MAX 34" AFF). PROVIDE BACKING PLATES PER 15/6.05.
3. ACCESSIBLE COMPUTER STATIONS, NIC
4. NOT USED
5. ADJUSTABLE SHELVES
6. RECESSED MOTORIZED PROJECTION SCREEN, SEE AUDIO VISUAL
7. PLAM COUNTERTOP
8. PLAM COUNTERTOP AND BACKSPLASH
9. PLAM UPPER CABINET
10. PLAM COUNTER W/ MANIKIN STORAGE BELOW
11. PLAM COUNTER / CHECK-IN STATION
12. PLAM FULL HEIGHT CABINET
13. PLAM ACCESSIBLE CABINET DOORS WITH KICK
14. PLAM UPPER CABINET(S) W/ WHITEBOARD FACE
15. PLAM UPPER CABINET(S) WITH MAIL BOXES
16. NOT USED
17. WALL MOUNT MEDIA BOX - SEE AUDIO VISUAL DWGS. MAX 4" PROJECTION OR MAX. 21" AFF TO BOTTOM, NIC
18. NOT USED
19. NOT USED
20. EQUIPMENT CLOSET
21. NOT USED
22. RUBBER BASE
23. NOT USED
24. NOT USED
25. HOSPITAL BED WITH OVERBED TRAY TABLE, NIC
26. BEDSIDE TABLE/ NIGHT STAND, NIC
27. (E) RELOCATED "COSENT" HEADWALL W/ ELECT., O2, COMPRESSED AIR, & VACUUM
28. HAND SINK W/ ELECTRONIC SENSOR
29. HAND SINK SINK W/ FOOT PEDAL
30. NOT USED
31. NOT USED
32. NOT USED
33. MED CART, NIC
34. AMBULANCE GURNEY, NIC
35. NOT USED
36. NOT USED
37. NOT USED
38. 8.5 M MAN MANIKEN
39. DELIVERY BED, NIC
40. POST PARTUM BED, NIC
41. PEDIATRIC CRIB, NIC
42. PEDIATRIC MONITOR
43. CHILD CRIB, NIC
44. ISOLETTE, NIC
45. L/D WARMER, NIC
46. CRASH CART, NIC
47. FETAL MONITOR/ CART, NIC
48. COMPRESSOR, NIC
49. DESK, NIC
50. WARMER / BASSINET, NIC
51. SKELETON ON A STAND, NIC
52. COPIER / PRINTER, NIC
53. ICE MAKER, NIC
54. NOT USED
55. COMMERCIAL REFRIGERATOR, CFCI
56. COMMERICAL FREEZER, CFCI
57. LOCKERS, CFCI. PROVIDE BACKING PLATE PER 20/6.05, FLOOR ANCHORAGE PER 18/6.05.
58. WASHER, FRONT-LOADING, CFCI
59. DRYER, FRONT-LOADING, CFCI
60. TACK/BULLETIN BD (TOP OF TRAY MAX 34" AFF). PROVIDE BACKING PLATES PER 15/6.05.
61. PLATING TABLE, ACCESSIBLE, NIC. PROVIDE 30" H. X 27" H. X 19" D. CLEAR SPACE.
62. NOT USED
63. MIRROR, CFCI
64. NOT USED
65. DOUBLE SINK W/ GARBAGE DISPOSAL
66. INDUSTRIAL STAINLESS STEEL COUNTER AND BASE CABINETS
67. DRY ERASE MARKERBOARD PLAM UPPER CABINETS
68. NOT USED
69. PAPER TOWEL DISPENSER, OFCI
70. NOT USED
71. NOT USED
72. PLAM UPPER CABINET(S) WITH WRITE-ON STRIP
73. PLAM UPPER CABINET W/ OPEN SHELVES
74. DISPLAY UNIT, SEE 6/6.03
75. NOT USED
76. MOVABLE METRO SHELVING, NIC
77. NOT USED
78. NOT USED
79. NOT USED
80. CEILING MOUNTED CURTAIN & TRACK
81. NOT USED
82. NOT USED
83. NOT USED
84. NOT USED
85. NOT USED
86. NOT USED
87. OVERHEAD LIGHT
88. TEACHING WALL, SEE 18/6.05
89. PULMONARY FUNCTION MACHINE, NIC
90. NOT USED
91. NOT USED
92. NOT USED
93. NOT USED
94. O_2/AIR/VACUUM, OFCI
95. NOT USED
96. EXAM TABLE, NIC
97. NOT USED
98. EKG CART, NIC
99. NOT USED
100. NOT USED
101. FLAT PANEL DISPLAY WITH SPEAKER, SHEET AV4.03, NIC
102. WALL MOUNTED CAMERA, SEE SHEET AV4.05, NIC
103. NOT USED
104. SOAP DISPENSER, OFCI
105. NOT USED
106. AV EQUIPMENT RACK, NIC, SEE AV DRAWINGS
107. NOT USED
108. NOT USED
109. NOT USED
110. ACOUSTICAL WALL PANELS
111. "COSENT" HEADWALL W/ ELECT., SIMULATED O2, COMPRESSED AIR & VACUUM OUTLETS. MAX. 4" PROJECTION.
112. "CONTOUR" HEADWALL W/ ELECT., SIMULATED O2, COMPRESSED AIR, & VACUUM OUTLETS MAX. 4" PROJECTION
113. NOT USED
114. NOT USED
115. NOT USED
116. NOT USED
117. NOT USED
118. TACKABLE WALLCOVERING, TWP-1
119. NOT USED
120. FREESTANDING OVERHEAD AND LOWER CABINET UNIT, SEE DETAIL 10/6.03
121. ACCESSIBLE LECTERN, N.I.C. MOBILE, ADJUSTABLE HEIGHT.
122. ALTERNATE #4: FUTURE METAL STUD / GYPSUM BOARD WALL, FUTURE CASEWORK, FUTURE EQUIPMENT, SHOWN DOTTED ON PLAN. SEE FOOD SERVICE DRAWINGS.
123. UNDER-STAIR LIGHT, SEE ELECTRICAL DWGS.
124. ALTERNATE #6: ADD SLOPED FLOOR AT PLANETARIUM. ADD FLOOR RAMPS AT PLANETARIUM VESTIBULES. ADD PLANETARIUM SEATING. CHANGE PLANETARIUM DOORS & FRAMES TO STANDARD HEIGHT. (BASE BID = FLAT FLOOR)
125. ACCESSIBLE DESK. PROVIDE 30" X 48" X 27" H. CLEAR SPACE AND ISA SYMBOL.
126. PROVIDE 4 WHEELCHAIR SPACES, 33" X 48" MIN.
127. 10" DEEP NICHE FOR FLAT PANEL SCREEN. COORDINATE DIMENSIONS AND CONNECTIONS WITH OWNER.

tBP
architecture
planning
interiors
management

LICENSED ARCHITECT
MICHAEL KEITH TRAPP
NO. 28484
REG. EXP. 8-31-11
STATE OF CALIFORNIA

tBP/Architecture
5455 Wilshire Boulevard, Suite 1200
Los Angeles, CA 90036-4242
ph: 323. 556. 3788 fx: 323. 556. 3799

architect

consultant

IDENTIFICATION STAMP
DIV. OF THE STATE ARCHITECT
OFFICE OF REGULATION SERVICES
File No. 19-C11
Appl No. 03-112201
AC ____ RS ____ SS ____
DATE ____

DSA Los Angeles Basin Regional Office
700 North Alameda Street, Suite 5-500
Los Angeles, California 90012
ph: 213/897-3995 fx: 213/897-3159/0726

agency

ANTELOPE VALLEY COLLEGE HEALTH & SCIENCE BUILDING

ANTELOPE VALLEY COMMUNITY COLLEGE DISTRICT
3041 WEST AVENUE K
LANCASTER, CA 93536-5426

owner

tBP project number : 206411.00
file name: A-0121-EP-CLA.dwg
drawn by: JS checked by: MK
date: JULY 30, 2009 - 100% CD

Rev:	date:	description:
2	2/26/10	ADDENDUM #2

THIS DRAWING AND THE DESIGNS, DEPICTIONS, IDEAS AND OTHER INFORMATION CONTAINED HEREIN CONSTITUTE UNPUBLISHED WORK OF tBP/ARCHITECTURE AND SHALL REMAIN THE PROPERTY OF tBP/ARCHITECTURE IN PERPETUITY. NO PART THEREOF SHALL BE REPRODUCED, DISCLOSED, DISTRIBUTED, SOLD, PUBLISHED OR OTHERWISE USED IN ANY WAY WITHOUT THE ADVANCED EXPRESS WRITTEN CONSENT OF tBP/ARCHITECTURE.

drawing title:
ENLARGED CLASSROOM PLAN & INT ELEVATIONS

drawing no.:
A-7.27
drawing of

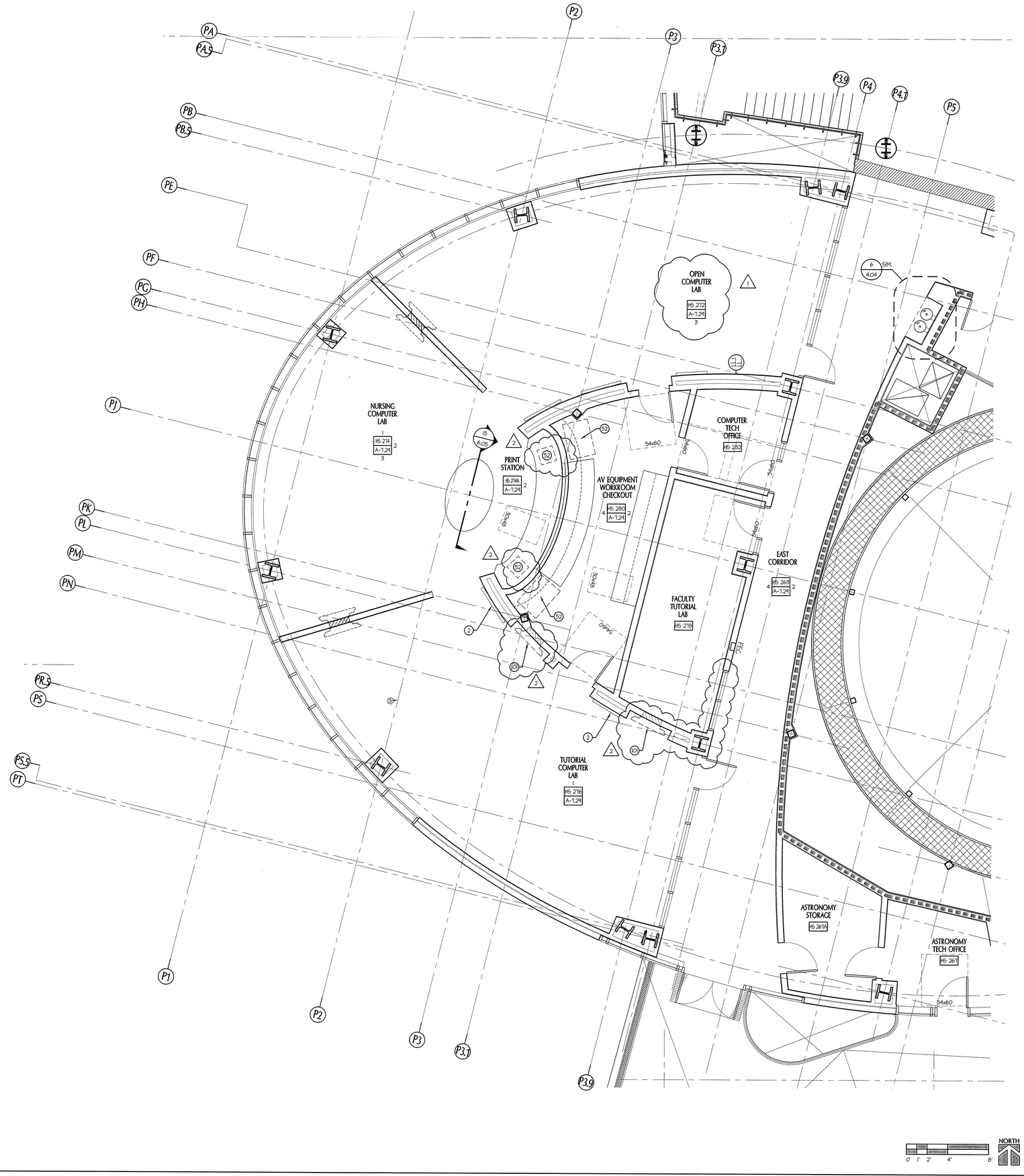

ENLARGED COMPUTER LAB PLAN

SCALE: 1/4" = 1'-0"

1

GENERAL NOTES

1. KEYNOTES ARE STANDARD FOR ALL INTERIOR ELEVATION AND ENLARGED PLAN DRAWINGS. NOT ALL NOTES USED ON A PARTICULAR SHEET.
2. PROVIDE ADJUSTABLE SHELVES AND LOCKS IN ALL CABINETRY.
3. ALL FIXTURES AND ACCESSORIES ARE ACCESSIBLE UNLESS OTHERWISE NOTED.
4. PROVIDE EQUAL TOLEARANCE AT EACH END OF UPPER & LOWER CABINET RUNS.
5. ALL FIRE ALARM DEVICES & THERMOSTATS TO BE INSTALLED CLEAR OF MARKERBOARD AND TACKBOARDS, TYP.
6. COORDINATE INSTALLATION OF ALL ACOUSTICAL PANELS TO SCRIBE AROUND ALL MARKERBOARS & TACKBOARDS, TYP.

GENERAL KEYNOTES

1. HAND SINK, REGULAR
2. MARKER BD (TOP OF TRAY MAX 34" AFF). PROVIDE BACKING PLATES PER 13/6.05.
3. ACCESSIBLE COMPUTER STATIONS, NIC
4. NOT USED
5. ADJUSTABLE SHELVES (2)
6. RECESSED MOTORIZED PROJECTION SCREEN, SEE AUDIO VISUAL
7. PLAM COUNTERTOP
8. PLAM COUNTERTOP AND BACKSPLASH
9. PLAM UPPER CABINET
10. PLAM COUNTER W/ MANIKIN STORAGE BELOW
11. PLAM COUNTER / CHECK-IN STATION
12. PLAM FULL HEIGHT CABINET
13. PLAM ACCESSIBLE CABINET DOORS WITH KICK
14. PLAM UPPER CABINET(S) W/ WHITEBOARD FACE
15. PLAM UPPER CABINET(S) WITH MAIL BOXES
16. NOT USED
17. WALL MOUNT MEDIA BOX - SEE AUDIO VISUAL DWGS. MAX 4" PROJECTION OR MAX. 27" AFF TO BOTTOM, NIC (2)
18. NOT USED
19. NOT USED (2)
20. EQUIPMENT CLOSET
21. NOT USED (2)
22. RUBBER BASE
23. NOT USED
24. NOT USED (2)
25. HOSPITAL BED WITH OVERBED TRAY TABLE, NIC
26. BEDSIDE TABLE/ NIGHT STAND, NIC
27. (E) RELOCATED "COSENT" HEADWALL W/ ELECT., O2, COMPRESSED AIR, & VACUUM
28. HAND SINK W/ ELECTRONIC SENSOR
29. HAND SINK SINK W/ FOOT PEDAL
30. NOT USED
31. NOT USED (2)
32. NOT USED
33. MED CART, NIC
34. AMBULANCE GURNEY, NIC
35. NOT USED
36. NOT USED (2)
37. NOT USED
38. 1.5 M MAN MANIKEN
39. DELIVERY BED, NIC
40. POST PARTUM BED, NIC
41. PEDIATRIC CRIB, NIC
42. PEDIATRIC MONITOR
43. CHILD CRIB, NIC
44. ISOLETTE, NIC
45. L/D WARMER, NIC
46. CRASH CART, NIC
47. FETAL MONITOR/ CART, NIC
48. COMPRESSOR, NIC
49. DESK, NIC
50. WARMER / BASSINET, NIC
51. SKELETON ON A STAND, NIC
52. COPIER / PRINTER, NIC (2)
53. ICE MAKER, NIC
54. NOT USED
55. COMMERCIAL REFRIGERATOR, CFCI
56. COMMERICAL FREEZER, CFCI (2)
57. LOCKERS, CFCI. PROVIDE BACKING PLATE PER 20/6.05, FLOOR ANCHORAGE PER 18/6.05.
58. WASHER, FRONT-LOADING, CFCI
59. DRYER, FRONT-LOADING, CFCI
60. TACKBULLETIN BD (TOP OF TRAY MAX 34" AFF). PROVIDE BACKING PLATES PER 13/6.05
61. PLATING TABLE, ACCESSIBLE, NIC. PROVIDE 30" H. X 27" H. X 19" D. CLEAR SPACE.
62. NOT USED
63. MIRROR, CFCI (2)
64. NOT USED
65. DOUBLE SINK W/ GARBAGE DISPOSAL
66. INDUSTRIAL STAINLESS STEEL COUNTER AND BASE CABINETS
67. DRY ERASE MARKERBOARD PLAM UPPER CABINETS
68. NOT USED
69. PAPER TOWEL DISPENSER, OFCI (2)
70. NOT USED
71. NOT USED
72. PLAM UPPER CABINET(S) WITH WRITE-ON STRIP
73. PLAM UPPER CABINET W/ OPEN SHELVES
74. DISPLAY UNIT, SEE 6/6.03
75. NOT USED
76. MOVABLE METRO SHELVING, NIC (2)
77. NOT USED
78. NOT USED
79. NOT USED
80. CEILING MOUNTED CURTAIN & TRACK
81. NOT USED
82. NOT USED (2)
83. NOT USED
84. NOT USED
85. NOT USED
86. NOT USED
87. OVERHEAD LIGHT
88. TEACHING WALL, SEE 18/6.05 (2)
89. PULMONARY FUNCTION MACHINE, NIC
90. NOT USED
91. NOT USED
92. NOT USED
93. NOT USED (2)
94. O_2/AIR/VACUUM, OFCI
95. NOT USED
96. EXAM TABLE, NIC
97. NOT USED
98. EKG CART, NIC
99. NOT USED
100. NOT USED (2)
101. FLAT PANEL DISPLAY WITH SPEAKER, SHEET AV4.03, NIC
102. WALL MOUNTED CAMERA, SEE SHEET AV4.03, NIC
103. NOT USED
104. SOAP DISPENSER, OFCI
105. NOT USED
106. AV EQUIPMENT RACK, NIC, SEE AV DRAWINGS
107. NOT USED
108. NOT USED
109. NOT USED
110. ACOUSTICAL WALL PANELS
111. "COSENT" HEADWALL W/ ELECT., SIMULATED O2, COMPRESSED AIR & VACUUM OUTLETS. MAX. 4" PROJECTION.
112. "CONTOUR" HEADWALL W/ ELECT., SIMULATED O2, COMPRESSED AIR, & VACUUM OUTLETS MAX. 4" PROJECTION
113. NOT USED
114. NOT USED
115. NOT USED
116. NOT USED
117. NOT USED (2)
118. TACKABLE WALLCOVERING, TNP-1 (2)
119. NOT USED
120. FREESTANDING OVERHEAD AND LOWER CABINET UNIT, SEE DETAIL 10/6.03
121. ACCESSIBLE LECTERN, N.I.C. MOBILE, ADJUSTABLE HEIGHT.
122. ALTERNATE #4: FUTURE METAL STUD / GYPSUM BOARD WALL, FUTURE CASEWORK, FUTURE EQUIPMENT, SHOWN DOTTED ON PLAN. SEE FOOD SERVICE DRAWINGS.
123. UNDER-STAIR LIGHT, SEE ELECTRICAL DWGS.
124. ALTERNATE #6: ADD SLOPED FLOOR AT PLANETARIUM. ADD FLOOR RAMPS AT PLANETARIUM VESTIBULES. ADD PLANETARIUM SEATING. CHANGE PLANETARIUM DOORS & FRAMES TO STANDARD HEIGHT. (BASE BID = FLAT FLOOR)
125. ACCESSIBLE DESK. PROVIDE 30" X 48" X 27" H. CLEAR SPACE AND ISA SYMBOL.
126. PROVIDE 4 WHEELCHAIR SPACES, 33" X 48" MIN.
127. 10" DEEP NICHE FOR FLAT PANEL SCREEN. COORDINATE DIMENSIONS AND CONNECTIONS WITH OWNER. (2)

tBP
architecture
planning
interiors
management

LICENSED ARCHITECT
STATE OF CALIFORNIA

tBP/Architecture
5455 Wilshire Boulevard, Suite 1200
Los Angeles, CA 90036-4242
ph: 323. 556. 3788 fx: 323. 556. 3799

architect

consultant

IDENTIFICATION STAMP
DIV. OF THE STATE ARCHITECT
OFFICE OF REGULATION SERVICES
File No. 19-C11
Appl No. 03-112201
AC ____ FLS ____ SS ____
DATE ____

DSA Los Angeles Basin Regional Office
700 North Alameda Street, Suite 5-500
Los Angeles, California 90012
ph: 213/897-3995 fx: 213/897-3159/0726

agency

ANTELOPE VALLEY COLLEGE HEALTH & SCIENCE BUILDING

ANTELOPE VALLEY COMMUNITY COLLEGE DISTRICT
3041 WEST AVENUE K
LANCASTER, CA 93536-5426

owner

tBP project number : 20641.00

file name: A-0728-EP-COM.dwg

drawn by: JS checked by: MK

date: JULY 30, 2009 - 100% CD

Rev:	date:	description:
1	11/16/09	ADDENDUM #1
2	2/26/10	ADDENDUM #2

THIS DRAWING AND THE DESIGNS, DEPICTIONS, IDEAS AND OTHER INFORMATION CONTAINED HEREIN CONSTITUTE UNPUBLISHED WORK OF tBP/ARCHITECTURE AND SHALL REMAIN THE PROPERTY OF tBP/ARCHITECTURE IN PERPETUITY. NO PART THEREOF SHALL BE REPRODUCED, DISCLOSED, DISTRIBUTED, SOLD, PUBLISHED OR OTHERWISE USED IN ANY WAY WITHOUT THE ADVANCED EXPRESS WRITTEN CONSENT OF tBP/ARCHITECTURE.

drawing title:
ENLARGED COMPUTER LAB PLAN

drawing no.:
A-7.28

drawing of

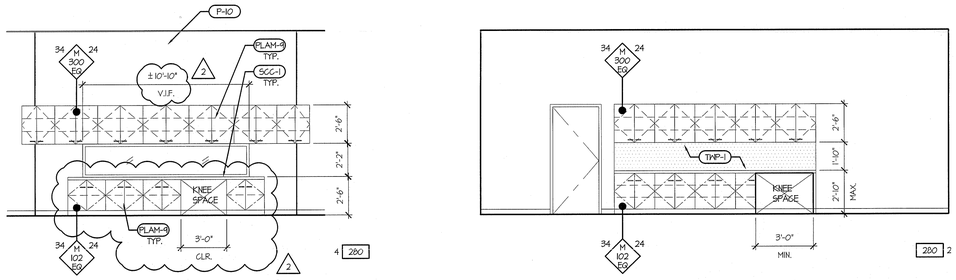

AV EQUIPMENT WORKRM/CHECKOUT INTERIOR ELEVATION — HS 280

SCALE: 1/4" = 1'-0"

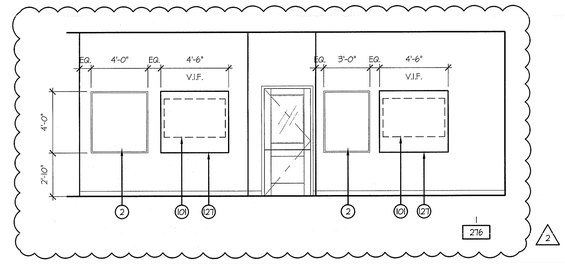

TUTORIAL COMPUTER LAB INTERIOR ELEVATION — HS 276

SCALE: 1/4" = 1'-0"

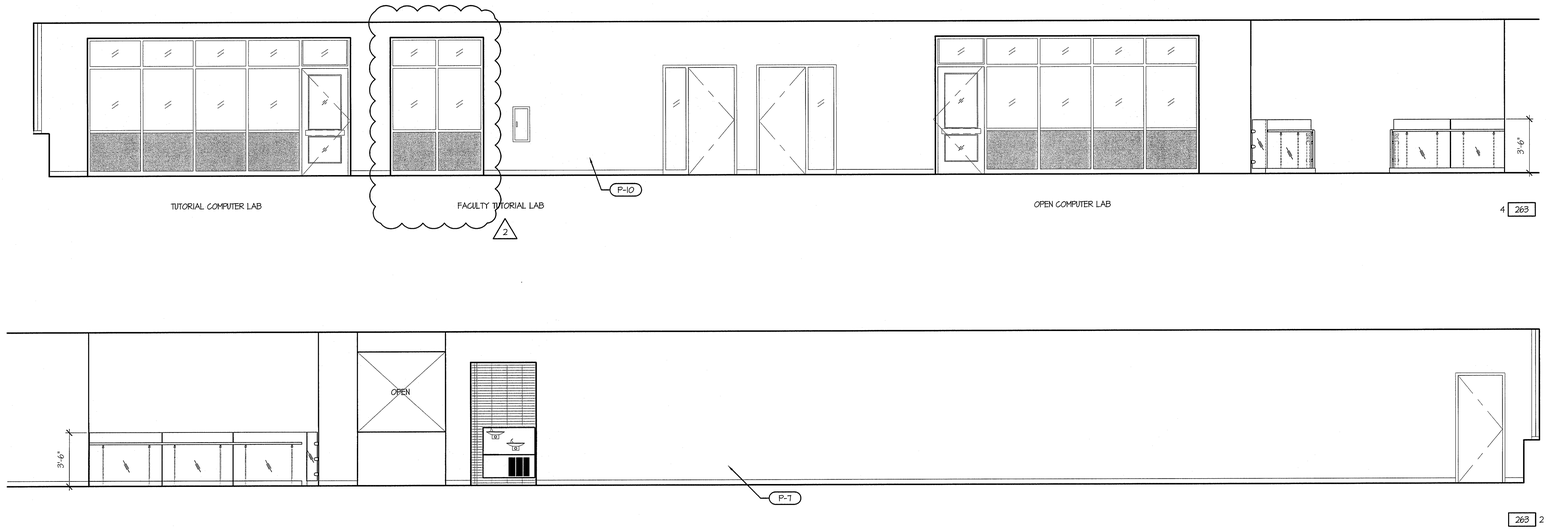

EAST CORRIDOR INTERIOR ELEVATION — HS 263

SCALE: 1/4" = 1'-0"

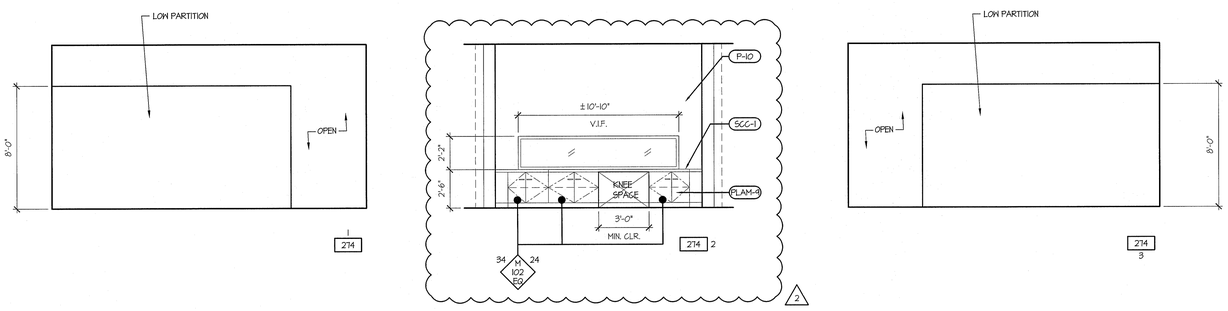

NURSING COMPUTER LAB INTERIOR ELEVATION — HS 274

SCALE: 1/4" = 1'-0"

GENERAL NOTES

1. KEYNOTES ARE STANDARD FOR ALL INTERIOR ELEVATION AND ENLARGED PLAN DRAWINGS. NOT ALL NOTES USED ON A PARTICULAR SHEET.
2. PROVIDE ADJUSTABLE SHELVES AND LOCKS IN ALL CABINETRY.
3. ALL FIXTURES AND ACCESSORIES ARE ACCESSIBLE UNLESS OTHERWISE NOTED.
4. PROVIDE EQUAL TOLERANCE AT EACH END OF UPPER & LOWER CABINET RUNS.
5. ALL FIRE ALARM DEVICES & THERMOSTATS TO BE INSTALLED CLEAR OF MARKERBOARD AND TACKBOARDS, TYP.
6. COORDINATE INSTALLATION OF ALL ACOUSTICAL PANELS TO SCRIBE AROUND ALL MARKERBOARDS & TACKBOARDS, TYP.

GENERAL KEYNOTES

1. HAND SINK, REGULAR
2. MARKER BD (TOP OF TRAY MAX 34" AFF). PROVIDE BACKING PLATES PER 13/6.05.
3. ACCESSIBLE COMPUTER STATIONS, NIC
4. NOT USED
5. ADJUSTABLE SHELVES
6. RECESSED MOTORIZED PROJECTION SCREEN, SEE AUDIO VISUAL
7. PLAM COUNTERTOP
8. PLAM COUNTERTOP AND BACKSPLASH
9. PLAM UPPER CABINET
10. PLAM COUNTER W/ MANIKIN STORAGE BELOW
11. PLAM COUNTER / CHECK-IN STATION
12. PLAM FULL HEIGHT CABINET
13. PLAM ACCESSIBLE CABINET DOORS WITH KICK
14. PLAM UPPER CABINET(S) W/ WHITEBOARD FACE
15. PLAM UPPER CABINET(S) WITH MAIL BOXES
16. NOT USED
17. WALL MOUNT MEDIA BOX - SEE AUDIO VISUAL DWGS. MAX 4" PROJECTION OR MAX. 21" AFF TO BOTTOM, NIC
18. NOT USED
19. NOT USED
20. EQUIPMENT CLOSET
21. NOT USED
22. RUBBER BASE
23. NOT USED
24. NOT USED
25. HOSPITAL BED WITH OVERBED TRAY TABLE, NIC
26. BEDSIDE TABLE/ NIGHT STAND, NIC
27. (E) RELOCATED "COSENT" HEADWALL W/ ELECT., O2, COMPRESSED AIR, & VACUUM.
28. HAND SINK W/ ELECTRONIC SENSOR.
29. HAND SINK SINK W/ FOOT PEDAL
30. NOT USED
31. NOT USED
32. NOT USED
33. MED CART, NIC
34. AMBULANCE GURNEY, NIC
35. NOT USED
36. NOT USED
37. NOT USED
38. 5.5 M MAN MANIKEN
39. DELIVERY BED, NIC
40. POST PARTUM BED, NIC
41. PEDIATRIC CRIB, NIC
42. PEDIATRIC MONITOR
43. CHILD CRIB, NIC
44. ISOLETTE, NIC
45. L/D WARMER, NIC
46. CRASH CART, NIC
47. FETAL MONITOR/ CART, NIC
48. COMPRESSOR, NIC
49. DESK, NIC
50. WARMER / BASSINET, NIC
51. SKELETON ON A STAND, NIC
52. COPIER / PRINTER, NIC
53. ICE MAKER, NIC
54. NOT USED
55. COMMERCIAL REFRIGERATOR, CFCI
56. COMMERICAL FREEZER, CFCI
57. LOCKERS, CFCI. PROVIDE BACKING PLATE PER 20/6.05. FLOOR ANCHORAGE PER 18/6.05.
58. WASHER, FRONT-LOADING, CFCI
59. DRYER, FRONT-LOADING, CFCI
60. TACK/BULLETIN BD (TOP OF TRAY MAX 34" AFF.). PROVIDE BACKING PLATES PER 13/6.05.
61. PLATING TABLE, ACCESSIBLE, NIC. PROVIDE 30" H. X 27" H. X 14" D. CLEAR SPACE.
62. NOT USED
63. MIRROR, CFCI
64. NOT USED
65. DOUBLE SINK W/ GARBAGE DISPOSAL
66. INDUSTRIAL STAINLESS STEEL COUNTER AND BASE CABINETS
67. DRY ERASE MARKERBOARD PLAM UPPER CABINETS
68. NOT USED
69. PAPER TOWEL DISPENSER, CFCI
70. NOT USED
71. NOT USED
72. PLAM UPPER CABINET(S) WITH WRITE-ON STRIP
73. PLAM UPPER CABINET W/ OPEN SHELVES
74. DISPLAY UNIT, SEE 6/6.03
75. NOT USED
76. MOVABLE METRO SHELVING, NIC
77. NOT USED
78. NOT USED
79. NOT USED
80. CEILING MOUNTED CURTAIN & TRACK
81. NOT USED
82. NOT USED
83. NOT USED
84. NOT USED
85. NOT USED
86. NOT USED
87. OVERHEAD LIGHT
88. TEACHING WALL, SEE 18/6.05
89. PULMONARY FUNCTION MACHINE, NIC
90. NOT USED
91. NOT USED
92. NOT USED
93. NOT USED
94. O_2/AIR/VACUUM, CFCI
95. NOT USED
96. EXAM TABLE, NIC
97. NOT USED
98. EKG CART, NIC
99. NOT USED
100. NOT USED
101. FLAT PANEL DISPLAY WITH SPEAKER, SHEET AV4.03, NIC
102. WALL MOUNTED CAMERA, SEE SHEET AV4.03, NIC
103. NOT USED
104. SOAP DISPENSER, CFCI
105. NOT USED
106. AV EQUIPMENT RACK, NIC, SEE AV DRAWINGS
107. NOT USED
108. NOT USED
109. NOT USED
110. ACOUSTICAL WALL PANELS
111. "COSENT" HEADWALL W/ ELECT., SIMULATED O2, COMPRESSED AIR & VACUUM OUTLETS. MAX. 4" PROJECTION.
112. "CONTOUR" HEADWALL W/ ELECT., SIMULATED O2, COMPRESSED AIR, & VACUUM OUTLETS MAX. 4" PROJECTION
113. NOT USED
114. NOT USED
115. NOT USED
116. NOT USED
117. NOT USED
118. TACKABLE WALLCOVERING, TMP-1
119. NOT USED
120. FREESTANDING OVERHEAD AND LOWER CABINET UNIT, SEE DETAIL 10/6.03
121. ACCESSIBLE LECTERN, N.I.C. MOBILE, ADJUSTABLE HEIGHT.
122. ALTERNATE #4: FUTURE METAL STUD / GYPSUM BOARD WALL, FUTURE CASEWORK, FUTURE EQUIPMENT, SHOWN DOTTED ON PLAN. SEE FOOD SERVICE DRAWINGS.
123. UNDER-STAIR LIGHT, SEE ELECTRICAL DWGS.
124. ALTERNATE #6: ADD SLOPED FLOOR AT PLANETARIUM. ADD FLOOR RAMPS AT PLANETARIUM VESTIBULES. ADD PLANETARIUM SEATING. CHANGE PLANETARIUM DOORS & FRAMES TO STANDARD HEIGHT. (BASE BID = FLAT FLOOR)
125. ACCESSIBLE DESK. PROVIDE 30" X 48" X 27" H. CLEAR SPACE AND ISA SYMBOL.
126. PROVIDE 4 WHEELCHAIR SPACES, 33" X 48" MIN.
127. 10" DEEP NICHE FOR FLAT PANEL SCREEN. COORDINATE DIMENSIONS AND CONNECTIONS WITH OWNER.

tBP
architecture
planning
interiors
management

LICENSED ARCHITECT — STATE OF CALIFORNIA

tBP/Architecture
5455 Wilshire Boulevard, Suite 1200
Los Angeles, CA 90036-4242
ph: 323. 556. 3788 fx: 323. 556. 3799

architect

consultant

IDENTIFICATION STAMP
DIV. OF THE STATE ARCHITECT
OFFICE OF REGULATION SERVICES
File No. 19-C11
Appl No. 03-112201
AC ____ FLS ____ SS ____
DATE ____

DSA Los Angeles Basin Regional Office
700 North Alameda Street, Suite 5-500
Los Angeles, California 90012
ph: 213/897-3995 fx: 213/897-3159/0726

agency

ANTELOPE VALLEY COLLEGE
HEALTH & SCIENCE BUILDING
ANTELOPE VALLEY COMMUNITY COLLEGE DISTRICT
3041 WEST AVENUE K
LANCASTER, CA 93536-5426

owner

tBP project number : 206410.00
file name: A-0124-EP-COM.dwg
drawn by: JS checked by: MK
date: JULY 30, 2009 - 100% CD

Rev:	date:	description:
2	2/26/10	ADDENDUM #2

THIS DRAWING AND THE DESIGNS, DEPICTIONS, IDEAS AND OTHER INFORMATION CONTAINED HEREIN CONSTITUTE UNPUBLISHED WORK OF tBP/ARCHITECTURE AND SHALL REMAIN THE PROPERTY OF tBP/ARCHITECTURE IN PERPETUITY. NO PART THEREOF SHALL BE REPRODUCED, DISCLOSED, DISTRIBUTED, SOLD, PUBLISHED OR OTHERWISE USED IN ANY WAY WITHOUT THE ADVANCED EXPRESS WRITTEN CONSENT OF tBP/ARCHITECTURE.

drawing title:
ENL'D COMPUTER LAB
PLAN & INT ELEVATIONS

drawing no.:
A-7.29
drawing of

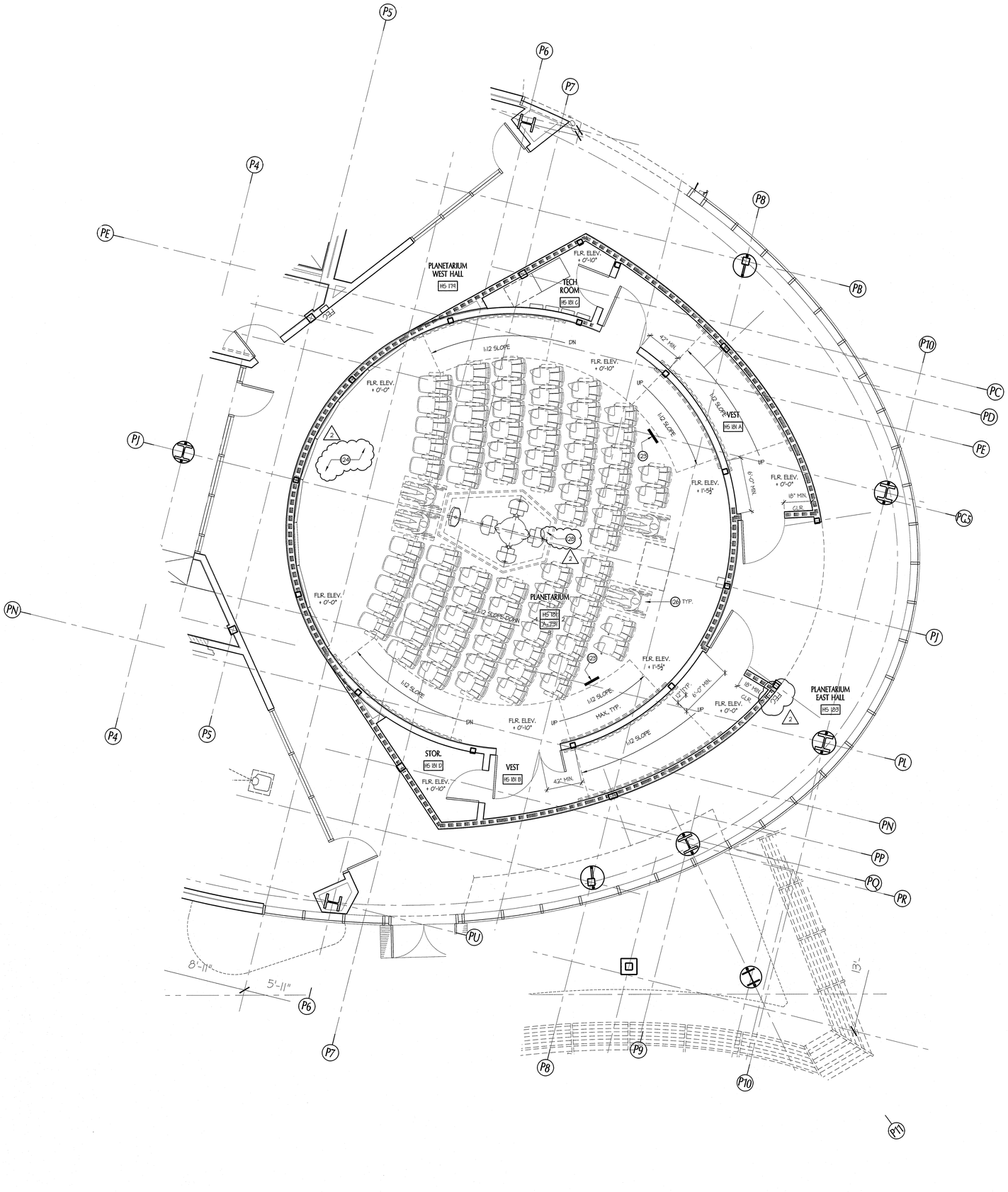

GENERAL NOTES

1. KEYNOTES ARE STANDARD FOR ALL INTERIOR ELEVATION AND ENLARGED PLAN DRAWINGS. NOT ALL NOTES USED ON A PARTICULAR SHEET.
2. PROVIDE ADJUSTABLE SHELVES AND LOCKS IN ALL CABINETRY.
3. ALL FIXTURES AND ACCESSORIES ARE ACCESSIBLE UNLESS OTHERWISE NOTED.
4. PROVIDE EQUAL TOLEARANCE AT EACH END OF UPPER & LOWER CABINET RUNS.
5. ALL FIRE ALARM DEVICES & THERMOSTATS TO BE INSTALLED CLEAR OF MARKERBOARD AND TACKBOARDS, TYP.
6. COORDINATE INSTALLATION OF ALL ACOUSTICAL PANELS TO SCRIBE AROUND ALL MARKERBOARS & TACKBOARDS, TYP.

GENERAL KEYNOTES

1. HAND SINK, REGULAR
2. MARKER BD (TOP OF TRAY MAX 34" AFF). PROVIDE BACKING PLATES PER 13/6.05.
3. ACCESSIBLE COMPUTER STATIONS, NIC
4. NOT USED
5. ADJUSTABLE SHELVES
6. RECESSED MOTORIZED PROJECTION SCREEN, SEE AUDIO VISUAL
7. PLAM COUNTERTOP
8. PLAM COUNTERTOP AND BACKSPLASH
9. PLAM UPPER CABINET
10. PLAM COUNTER W/ MANIKIN STORAGE BELOW
11. PLAM COUNTER / CHECK-IN STATION
12. PLAM FULL HEIGHT CABINET
13. PLAM ACCESSIBLE CABINET DOORS WITH KICK
14. PLAM UPPER CABINET(S) W/ WHITEBOARD FACE
15. PLAM UPPER CABINET(S) WITH MAIL BOXES
16. NOT USED
17. WALL MOUNT MEDIA BOX - SEE AUDIO VISUAL DWGS. MAX 4" PROJECTION OR MAX. 21" AFF TO BOTTOM, NIC
18. NOT USED
19. NOT USED
20. EQUIPMENT CLOSET
21. NOT USED
22. RUBBER BASE
23. NOT USED
24. NOT USED
25. HOSPITAL BED WITH OVERBED TRAY TABLE, NIC
26. BEDSIDE TABLE/ NIGHT STAND, NIC
27. (E) RELOCATED "COSENT" HEADWALL W/ ELECT., O2, COMPRESSED AIR, & VACUUM.
28. HAND SINK W/ ELECTRONIC SENSOR
29. HAND SINK SINK W/ FOOT PEDAL
30. NOT USED
31. NOT USED
32. NOT USED
33. MED CART, NIC
34. AMBULANCE GURNEY, NIC
35. NOT USED
36. NOT USED
37. NOT USED
38. 3.5 M MAN MANIKEN
39. DELIVERY BED, NIC
40. POST PARTUM BED, NIC
41. PEDIATRIC CRIB, NIC
42. PEDIATRIC MONITOR
43. CHILD CRIB, NIC
44. ISOLETTE, NIC
45. L/D WARMER, NIC
46. CRASH CART, NIC
47. FETAL MONITOR/ CART, NIC
48. COMPRESSOR, NIC
49. DESK, NIC
50. WARMER / BASSINET, NIC
51. SKELETON ON A STAND, NIC
52. COPIER / PRINTER, NIC
53. ICE MAKER, NIC
54. NOT USED
55. COMMERCIAL REFRIGERATOR, CFCI
56. COMMERICAL FREEZER, CFCI
57. LOCKERS, CFCI. PROVIDE BACKING PLATE PER 20/6.05, FLOOR ANCHORAGE PER 18/6.05.
58. WASHER, FRONT-LOADING, CFCI
59. DRYER, FRONT-LOADING, CFCI
60. TACK/BULLETIN BD (TOP OF TRAY MAX 34" AFF.). PROVIDE BACKING PLATES PER 13/6.05.
61. PLATING TABLE, ACCESSIBLE, NIC. PROVIDE 30" H. X 27" H. X 19" D. CLEAR SPACE.
62. NOT USED
63. MIRROR, CFCI
64. NOT USED
65. DOUBLE SINK W/ GARBAGE DISPOSAL
66. INDUSTRIAL STAINLESS STEEL COUNTER AND BASE CABINETS
67. DRY ERASE MARKERBOARD PLAM UPPER CABINETS
68. NOT USED
69. PAPER TOWEL DISPENSER, CFCI
70. NOT USED
71. NOT USED
72. PLAM UPPER CABINET(S) WITH WRITE-ON STRIP
73. PLAM UPPER CABINET W/ OPEN SHELVES
74. DISPLAY UNIT, SEE 6/6.03
75. NOT USED
76. MOVABLE METRO SHELVING, NIC
77. NOT USED
78. NOT USED
79. NOT USED
80. CEILING MOUNTED CURTAIN & TRACK
81. NOT USED
82. NOT USED
83. NOT USED
84. NOT USED
85. NOT USED
86. NOT USED
87. OVERHEAD LIGHT
88. TEACHING WALL, SEE 18/6.05
89. PULMONARY FUNCTION MACHINE, NIC
90. NOT USED
91. NOT USED
92. NOT USED
93. NOT USED
94. O_2/AIR/VACUUM, CFCI
95. NOT USED
96. EXAM TABLE, NIC
97. NOT USED
98. EKG CART, NIC
99. NOT USED
100. NOT USED
101. FLAT PANEL DISPLAY WITH SPEAKER, SHEET AV4.03, NIC
102. WALL MOUNTED CAMERA, SEE SHEET AV4.03, NIC
103. NOT USED
104. SOAP DISPENSER, CFCI
105. NOT USED
106. AV EQUIPMENT RACK, NIC, SEE AV DRAWINGS
107. NOT USED
108. NOT USED
109. NOT USED
110. ACOUSTICAL WALL PANELS
111. "COSENT" HEADWALL W/ ELECT., SIMULATED O2, COMPRESSED AIR & VACUUM OUTLETS. MAX. 4" PROJECTION.
112. "CONTOUR" HEADWALL W/ ELECT., SIMULATED O2, COMPRESSED AIR, & VACUUM OUTLETS MAX. 4" PROJECTION
113. NOT USED
114. NOT USED
115. NOT USED
116. NOT USED
117. NOT USED
118. TACKABLE WALLCOVERING, TNP-1
119. NOT USED
120. FREESTANDING OVERHEAD AND LOWER CABINET UNIT, SEE DETAIL 10/6.03
121. ACCESSIBLE LECTERN, N.I.C. MOBILE, ADJUSTABLE HEIGHT.
122. ALTERNATE #4: FUTURE METAL STUD / GYPSUM BOARD WALL, FUTURE CASEWORK, FUTURE EQUIPMENT, SHOWN DOTTED ON PLAN. SEE FOOD SERVICE DRAWINGS.
123. UNDER-STAIR LIGHT, SEE ELECTRICAL DWGS.
124. ALTERNATE #6: ADD SLOPED FLOOR AT PLANETARIUM. ADD FLOOR RAMPS AT PLANETARIUM VESTIBULES. ADD PLANETARIUM SEATING. CHANGE PLANETARIUM DOORS & FRAMES TO STANDARD HEIGHT. (BASE BID = FLAT FLOOR)
125. ACCESSIBLE DESK. PROVIDE 30" X 48" X 27" H. CLEAR SPACE AND ISA SYMBOL.
126. PROVIDE 4 WHEELCHAIR SPACES, 33" X 48" MIN.
127. 10" DEEP NICHE FOR FLAT PANEL SCREEN. COORDINATE DIMENSIONS AND CONNECTIONS WITH OWNER.
128. PLANETARIUM PROJECTOR, PLATFORM, GUARD RAIL, AND CONTROL DESK, N.I.C.

ENLARGED PLANETARIUM PLAN 1

SCALE: 1/4" = 1'-0"

NORTH

0 1' 2' 4' 8'

tBP
architecture
planning
interiors
management

LICENSED ARCHITECT
MICHAEL KNOX
NO. 18-2-1
STATE OF CALIFORNIA

tBP/Architecture
5455 Wilshire Boulevard, Suite 1200
Los Angeles, CA 90036-4242
ph: 323. 556. 3788 fx: 323. 556. 3799

architect

consultant

IDENTIFICATION STAMP
DIV. OF THE STATE ARCHITECT
OFFICE OF REGULATION SERVICES
File No. 19-C11
Appl No. 03-112201
AC ____ RS ____ SS ____
DATE ____

DSA Los Angeles Basin Regional Office
700 North Alameda Street, Suite 5-500
Los Angeles, California 90012
ph: 213/897-3995 fx: 213/897-3159/0726

agency

ANTELOPE VALLEY COLLEGE HEALTH & SCIENCE BUILDING

ANTELOPE VALLEY COMMUNITY COLLEGE DISTRICT
3041 WEST AVENUE K
LANCASTER, CA 93536-5426

owner

tBP project number : 206411.00
file name: A-0730-EP-PLA.dwg
drawn by: JS checked by: MK
date: JULY 30, 2009 - 100% CD

Rev:	date:	description:
2	2/26/10	ADDENDUM #2

THIS DRAWING AND THE DESIGNS, DEPICTIONS, IDEAS AND OTHER INFORMATION CONTAINED HEREIN CONSTITUTE UNPUBLISHED WORK OF tBP/ARCHITECTURE AND SHALL REMAIN THE PROPERTY OF tBP/ARCHITECTURE IN PERPETUITY. NO PART THEREOF SHALL BE REPRODUCED, DISCLOSED, DISTRIBUTED, SOLD, PUBLISHED OR OTHERWISE USED IN ANY WAY WITHOUT THE ADVANCED EXPRESS WRITTEN CONSENT OF tBP/ARCHITECTURE.

drawing title:
ENLARGED PLANETARIUM PLAN

drawing no.:
A-7.30
drawing of

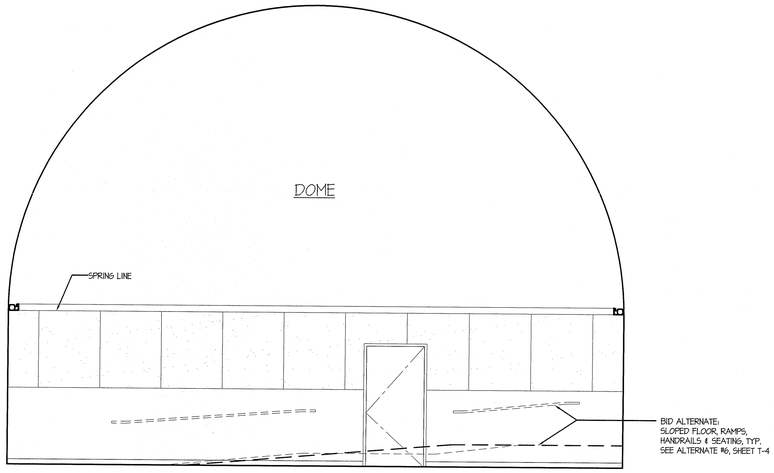

1 HS 181

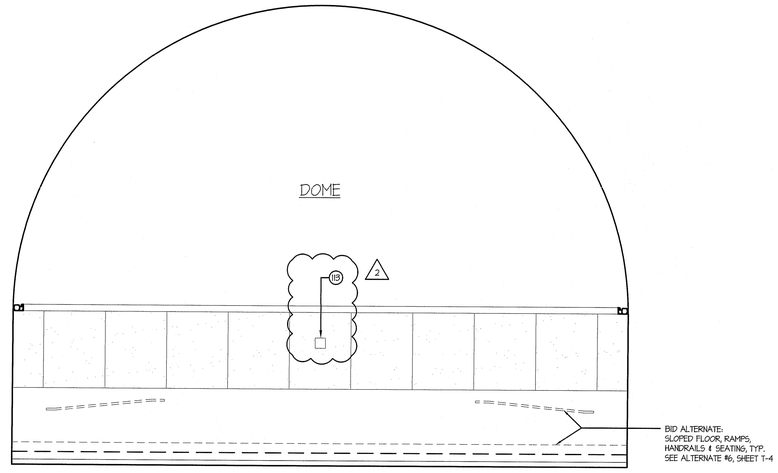

HS 181 2

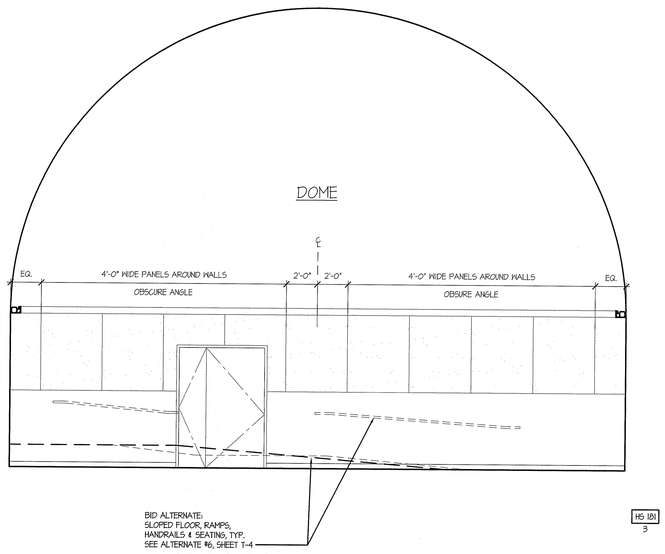

HS 181
3

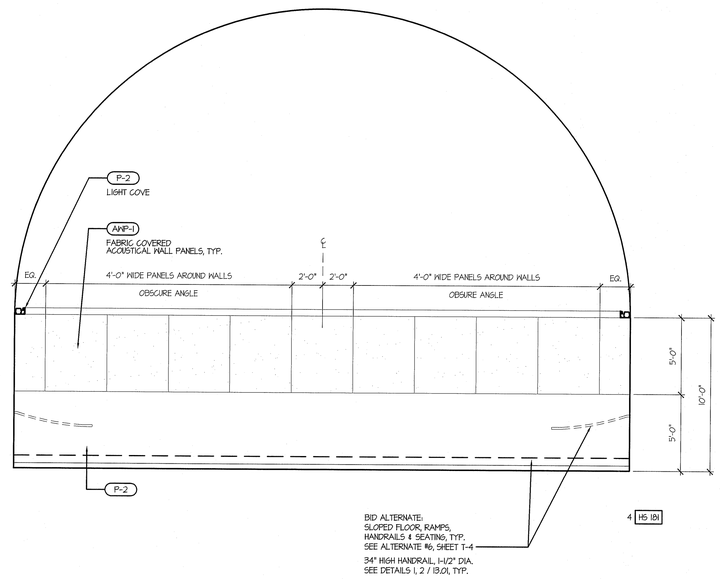

4 HS 181

PLANETARIUM INTERIOR ELEVATION

SCALE: 1/4" = 1'-0"

HS 181

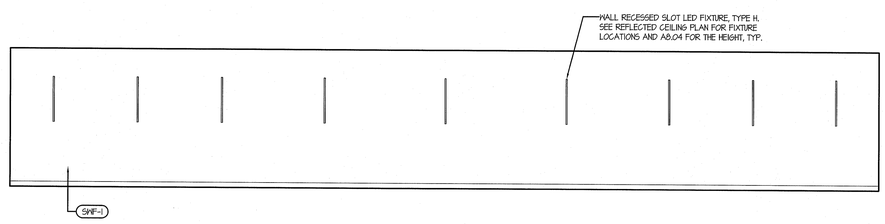

HS 179 2

PLANETARIUM WEST HALL INTERIOR ELEVATION

SCALE: 1/4" = 1'-0"

HS 179

GENERAL NOTES

1. KEYNOTES ARE STANDARD FOR ALL INTERIOR ELEVATION AND ENLARGED PLAN DRAWINGS. NOT ALL NOTES USED ON A PARTICULAR SHEET.
2. PROVIDE ADJUSTABLE SHELVES AND LOCKS IN ALL CABINETRY.
3. ALL FIXTURES AND ACCESSORIES ARE ACCESSIBLE UNLESS OTHERWISE NOTED.
4. PROVIDE EQUAL TOLERANCE AT EACH END OF UPPER & LOWER CABINET RUNS.
5. ALL FIRE ALARM DEVICES & THERMOSTATS TO BE INSTALLED CLEAR OF MARKERBOARD AND TACKBOARDS, TYP.
6. COORDINATE INSTALLATION OF ALL ACOUSTICAL PANELS TO SCRIBE AROUND ALL MARKERBOARDS & TACKBOARDS, TYP.

GENERAL KEYNOTES

1. HAND SINK, REGULAR.
2. MARKER BD (TOP OF TRAY MAX 34" AFF). PROVIDE BACKING PLATES PER 15/6.05.
3. ACCESSIBLE COMPUTER STATIONS, NIC
4. NOT USED
5. ADJUSTABLE SHELVES (2)
6. RECESSED MOTORIZED PROJECTION SCREEN, SEE AUDIO VISUAL
7. PLAM COUNTERTOP
8. PLAM COUNTERTOP AND BACKSPLASH
9. PLAM UPPER CABINET
10. PLAM COUNTER W/ MANIKIN STORAGE BELOW
11. PLAM COUNTER / CHECK-IN STATION
12. PLAM FULL HEIGHT CABINET
13. PLAM ACCESSIBLE CABINET DOORS WITH EGC
14. PLAM UPPER CABINET(S) W/ WHITEBOARD FACE
15. PLAM UPPER CABINET(S) WITH MAIL BOXES
16. NOT USED
17. WALL MOUNT MEDIA BOX - SEE AUDIO VISUAL DWGS. MAX 4" PROJECTION OR MAX. 27" AFF TO BOTTOM, NIC.
18. NOT USED
19. NOT USED (2)
20. EQUIPMENT CLOSET
21. NOT USED
22. RUBBER BASE (2)
23. NOT USED
24. NOT USED (2)
25. HOSPITAL BED WITH OVERBED TRAY TABLE, NIC
26. BEDSIDE TABLE/ NIGHT STAND, NIC
27. (E) RELOCATED "COSENT" HEADWALL W/ ELECT., O2, COMPRESSED AIR, & VACUUM
28. HAND SINK W/ ELECTRONIC SENSOR.
29. HAND SINK SINK W/ FOOT PEDAL
30. NOT USED
31. NOT USED (2)
32. NOT USED
33. MED CART, NIC
34. AMBULANCE GURNEY, NIC
35. NOT USED
36. NOT USED (2)
37. NOT USED
38. 1.5 M MAN MANIKEN
39. DELIVERY BED, NIC
40. POST PARTUM BED, NIC
41. PEDIATRIC CRIB, NIC
42. PEDIATRIC MONITOR
43. CHILD CRIB, NIC
44. ISOLETTE, NIC
45. L/D WARMER, NIC
46. CRASH CART, NIC
47. FETAL MONITOR/ CART, NIC
48. COMPRESSOR, NIC
49. DESK, NIC
50. WARMER / BASSINET, NIC
51. SKELETON ON A STAND, NIC
52. COPIER / PRINTER, NIC (2)
53. ICE MAKER, NIC
54. NOT USED
55. COMMERCIAL REFRIGERATOR, CFCI
56. COMMERICAL FREEZER, CFCI (2)
57. LOCKERS, CFCI. PROVIDE BACKING PLATE PER 20/6.05, FLOOR ANCHORAGE PER 18/6.05.
58. WASHER, FRONT-LOADING, CFCI
59. DRYER, FRONT-LOADING, CFCI
60. TACKBULLETIN BD (TOP OF TRAY MAX 34" AFF.). PROVIDE BACKING PLATES PER 8/6.05.
61. PLATING TABLE, ACCESSIBLE, NIC. PROVIDE 30" H. X 27" H. X 19" D. CLEAR SPACE.
62. NOT USED
63. MIRROR, CFCI (2)
64. NOT USED
65. DOUBLE SINK W/ GARBAGE DISPOSAL
66. INDUSTRIAL STAINLESS STEEL COUNTER AND BASE CABINETS
67. DRY ERASE MARKERBOARD PLAM UPPER CABINETS
68. NOT USED
69. PAPER TOWEL DISPENSER, CFCI (2)
70. NOT USED
71. NOT USED
72. PLAM UPPER CABINET(S) WITH WRITE-ON STRIP
73. PLAM UPPER CABINET W/ OPEN SHELVES
74. DISPLAY UNIT, SEE 6/6.03
75. NOT USED
76. MOVABLE METRO SHELVING, NIC (2)
77. NOT USED
78. NOT USED
79. NOT USED
80. CEILING MOUNTED CURTAIN & TRACK
81. NOT USED
82. NOT USED (2)
83. NOT USED
84. NOT USED
85. NOT USED
86. NOT USED
87. OVERHEAD LIGHT
88. TEACHING WALL, SEE 18/6.05 (2)
89. PULMONARY FUNCTION MACHINE, NIC
90. NOT USED
91. NOT USED
92. NOT USED (2)
93. NOT USED
94. O_2/AIR/VACUUM, CFCI
95. NOT USED
96. EXAM TABLE, NIC (2)
97. NOT USED
98. EKG CART, NIC
99. NOT USED
100. NOT USED (2)
101. FLAT PANEL DISPLAY WITH SPEAKER, SHEET AV4.03, NIC
102. WALL MOUNTED CAMERA, SEE SHEET AV4.03, NIC
103. NOT USED
104. SOAP DISPENSER, CFCI
105. NOT USED
106. AV EQUIPMENT RACK, NIC, SEE AV DRAWINGS
107. NOT USED
108. NOT USED
109. NOT USED
110. ACOUSTICAL WALL PANELS
111. "COSENT" HEADWALL W/ ELECT., SIMULATED O2, COMPRESSED AIR & VACUUM OUTLETS. MAX. 4" PROJECTION.
112. "CONTOUR" HEADWALL W/ ELECT., SIMULATED O2, COMPRESSED AIR, & VACUUM OUTLETS MAX. 4" PROJECTION (1)
113. NOT USED
114. NOT USED
115. NOT USED (2)
116. NOT USED
117. NOT USED
118. TACKABLE WALLCOVERING, TNF-1 (2)
119. NOT USED
120. FREESTANDING OVERHEAD AND LOWER CABINET UNIT, SEE DETAIL 10/6.03
121. ACCESSIBLE LECTERN, N.I.C. MOBILE, ADJUSTABLE HEIGHT.
122. ALTERNATE #4: FUTURE METAL STUD / GYPSUM BOARD WALL, FUTURE CASEWORK, FUTURE EQUIPMENT, SHOWN DOTTED ON PLAN. SEE FOOD SERVICE DRAWINGS.
123. UNDER-STAIR LIGHT, SEE ELECTRICAL DWGS.
124. ALTERNATE #6: ADD SLOPED FLOOR AT PLANETARIUM. ADD FLOOR RAMPS AT PLANETARIUM VESTIBULES. ADD PLANETARIUM SEATING. CHANGE PLANETARIUM DOORS & FRAMES TO STANDARD HEIGHT. (BASE BID = FLAT FLOOR)
125. ACCESSIBLE DESK. PROVIDE 30" X 48" X 27" H. CLEAR SPACE AND ISA SYMBOL.
126. PROVIDE 4 WHEELCHAIR SPACES, 33" X 48" MIN.
127. 10" DEEP NICHE FOR FLAT PANEL SCREEN. COORDINATE DIMENSIONS AND CONNECTIONS WITH OWNER. (2)

tBP
architecture
planning
interiors
management

tBP/Architecture
5455 Wilshire Boulevard, Suite 1200
Los Angeles, CA 90036-4242
ph: 323. 556. 3788 fx: 323. 556. 3799

LICENSED ARCHITECT
THOMAS BOCCHINO
NO. C18784
REG. 4-30-2011
STATE OF CALIFORNIA

architect

consultant

IDENTIFICATION STAMP
DIV. OF THE STATE ARCHITECT
OFFICE OF REGULATION SERVICES
File No. 19-C11
Appl No. 03-112201
AC ____ RS ____ SS ____
DATE ____

DSA Los Angeles Basin Regional Office
700 North Alameda Street, Suite 5-500
Los Angeles, California 90012
ph: 213/897-3995 fx: 213/897-3159/0726

agency

ANTELOPE VALLEY COLLEGE HEALTH & SCIENCE BUILDING

ANTELOPE VALLEY COMMUNITY COLLEGE DISTRICT
3041 WEST AVENUE K
LANCASTER, CA 93536-5426

owner

tBP project number : 20641.00
file name: A-0131-EP-PLA.dwg
drawn by: JS checked by: MK
date: JULY 30, 2009 - 100% CD

Rev:	date:	description:
2	2/26/10	ADDENDUM #2

THIS DRAWING AND THE DESIGNS, DEPICTIONS, IDEAS AND OTHER INFORMATION CONTAINED HEREIN CONSTITUTE UNPUBLISHED WORK OF tBPARCHITECTURE AND SHALL REMAIN THE PROPERTY OF tBPARCHITECTURE IN PERPETUITY. NO PART THEREOF SHALL BE REPRODUCED, DISCLOSED, DISTRIBUTED, SOLD, PUBLISHED OR OTHERWISE USED IN ANY WAY WITHOUT THE ADVANCED EXPRESS WRITTEN CONSENT OF tBPARCHITECTURE.

drawing title:
ENLARGED PLANETARIUM PLAN & INT ELEVATIONS

drawing no.:
A-7.31
drawing of

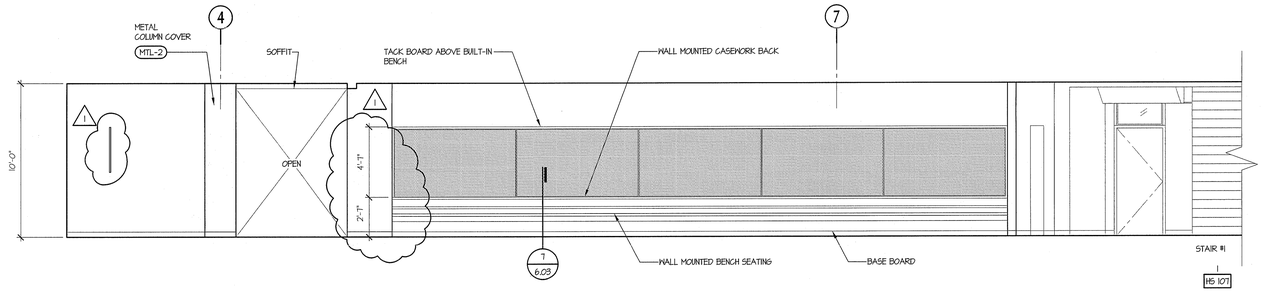

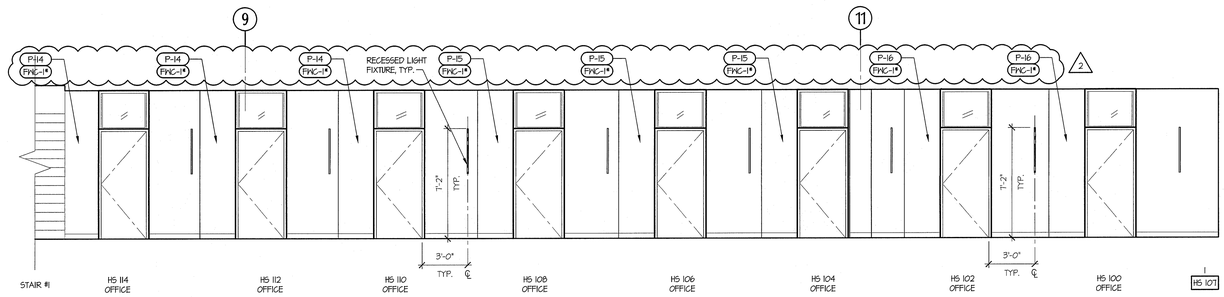

SOUTH CORRIDOR INTERIOR ELEVATION
SCALE: 1/4" = 1'-0"

HS 107

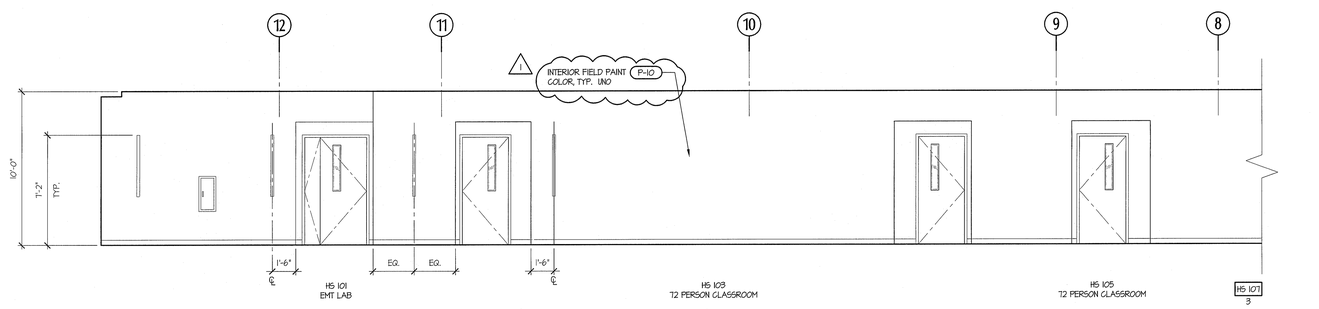

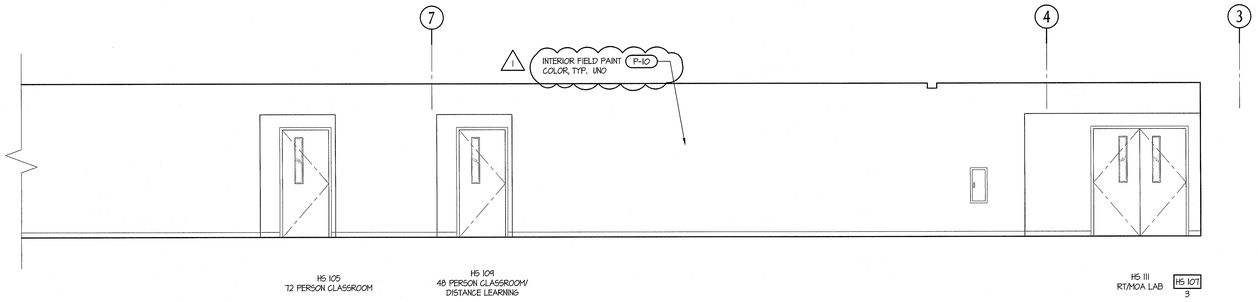

SOUTH CORRIDOR INTERIOR ELEVATION
SCALE: 1/4" = 1'-0"

HS 107

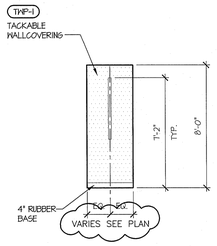

TYPICAL SIDE WALL ALCOVE INTERIOR ELEVATION
SCALE: 1/4" = 1'-0"

tBP
architecture
planning
interiors
management

LICENSED ARCHITECT
STATE OF CALIFORNIA

tBP/Architecture
5455 Wilshire Boulevard, Suite 1200
Los Angeles, CA 90036-4242
ph: 323. 556. 3788 fx: 323. 556. 3799

architect

consultant

IDENTIFICATION STAMP
DIV. OF THE STATE ARCHITECT
OFFICE OF REGULATION SERVICES
File No. 19-C11
Appl No. 03-112201
AC ____ RS ____ SS ____
DATE ____

DSA Los Angeles Basin Regional Office
700 North Alameda Street, Suite 5-500
Los Angeles, California 90012
ph: 213/897-3995 fx: 213/897-3159/0726

agency

ANTELOPE VALLEY COLLEGE
HEALTH & SCIENCE BUILDING
ANTELOPE VALLEY COMMUNITY COLLEGE DISTRICT
3041 WEST AVENUE K
LANCASTER, CA 93536-5426

owner

tBP project number : 20641.00
file name: A-0801-INT.DWG
drawn by: JT/BDV checked by: MK
date: JULY 30, 2009 - 100% CD

Rev:	date:	description:
1	11/16/09	ADDENDUM #1
2	2/26/10	ADDENDUM #2

THIS DRAWING AND THE DESIGNS, DEPICTIONS, IDEAS AND OTHER INFORMATION CONTAINED HEREIN CONSTITUTE UNPUBLISHED WORK OF tBP/ARCHITECTURE AND SHALL REMAIN THE PROPERTY OF tBP/ARCHITECTURE IN PERPETUITY. NO PART THEREOF SHALL BE REPRODUCED, DISCLOSED, DISTRIBUTED, SOLD, PUBLISHED OR OTHERWISE USED IN ANY WAY WITHOUT THE ADVANCED EXPRESS WRITTEN CONSENT OF tBP/ARCHITECTURE.

drawing title:
INTERIOR ELEVATIONS
1ST F. SOUTH CORRIDOR

drawing no.:
A-8.01
drawing - of -

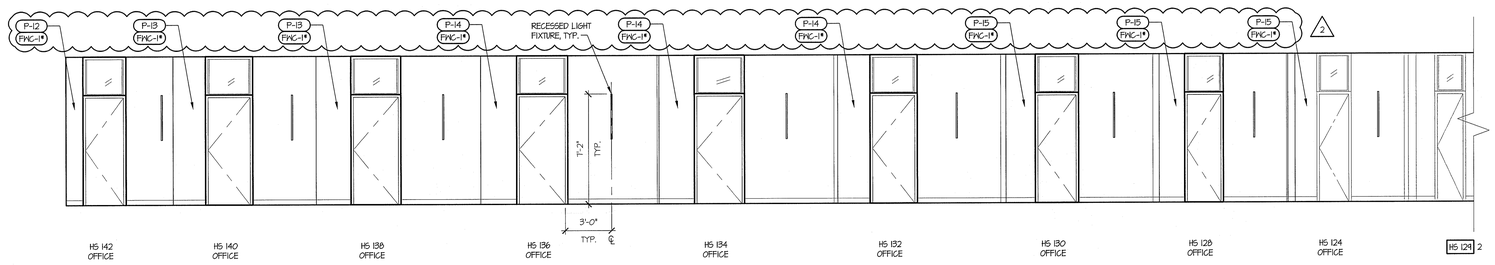

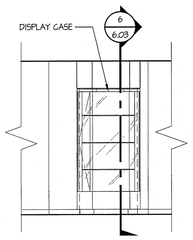

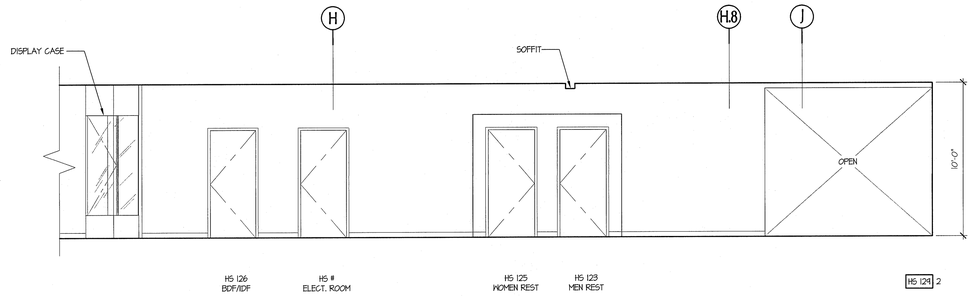

WEST CORRIDOR INTERIOR ELEVATION
SCALE: 1/4" = 1'-0"

HS 129

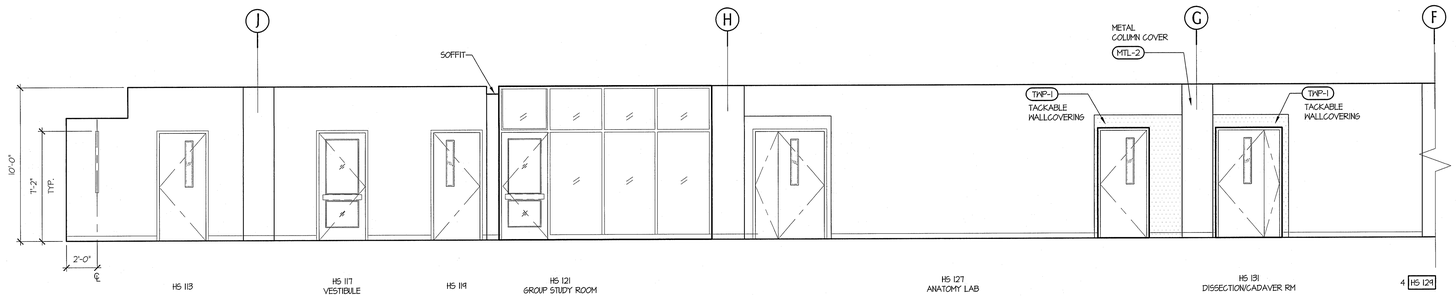

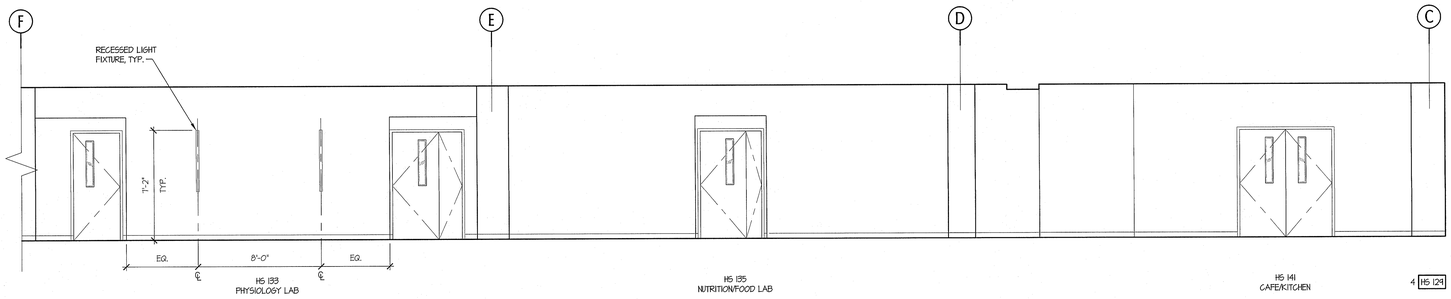

WEST CORRIDOR INTERIOR ELEVATION
SCALE: 1/4" = 1'-0"

HS 129

tBP
architecture
planning
interiors
management

LICENSED ARCHITECT
STATE OF CALIFORNIA
NO. C-29
EXP. 1-31-11

tBP/Architecture
5455 Wilshire Boulevard, Suite 1200
Los Angeles, CA 90036-4242
ph: 323. 556. 3788 fx: 323. 556. 3799

architect

consultant

IDENTIFICATION STAMP
DIV. OF THE STATE ARCHITECT
OFFICE OF REGULATION SERVICES
File No. 19-C11
Appl No. 03-112201
AC ____ FLS ____ SS ____
DATE ____

DSA Los Angeles Basin Regional Office
700 North Alameda Street, Suite 5-500
Los Angeles, California 90012
ph: 213/897-3995 fx: 213/897-3159/0726

agency

ANTELOPE VALLEY COLLEGE
HEALTH & SCIENCE BUILDING
ANTELOPE VALLEY COMMUNITY COLLEGE DISTRICT
3041 WEST AVENUE K
LANCASTER, CA 93536-5426

owner

tBP project number : 20641.00
file name: A-0802-INT.DWG
drawn by: JT/BD/V checked by: MK
date: JULY 30, 2009 - 100% CD

Rev:	date:	description:
2	2/26/10	ADDENDUM #2

THIS DRAWING AND THE DESIGNS, DEPICTIONS, IDEAS AND OTHER INFORMATION CONTAINED HEREIN CONSTITUTE UNPUBLISHED WORK OF tBP/ARCHITECTURE AND SHALL REMAIN THE PROPERTY OF tBP/ARCHITECTURE IN PERPETUITY. NO PART THEREOF SHALL BE REPRODUCED, DISCLOSED, DISTRIBUTED, SOLD, PUBLISHED OR OTHERWISE USED IN ANY WAY WITHOUT THE ADVANCED EXPRESS WRITTEN CONSENT OF tBP/ARCHITECTURE.

drawing title:
INTERIOR ELEVATIONS
1ST F. WEST CORRIDOR

drawing no.:
A-8.02
drawing - of -

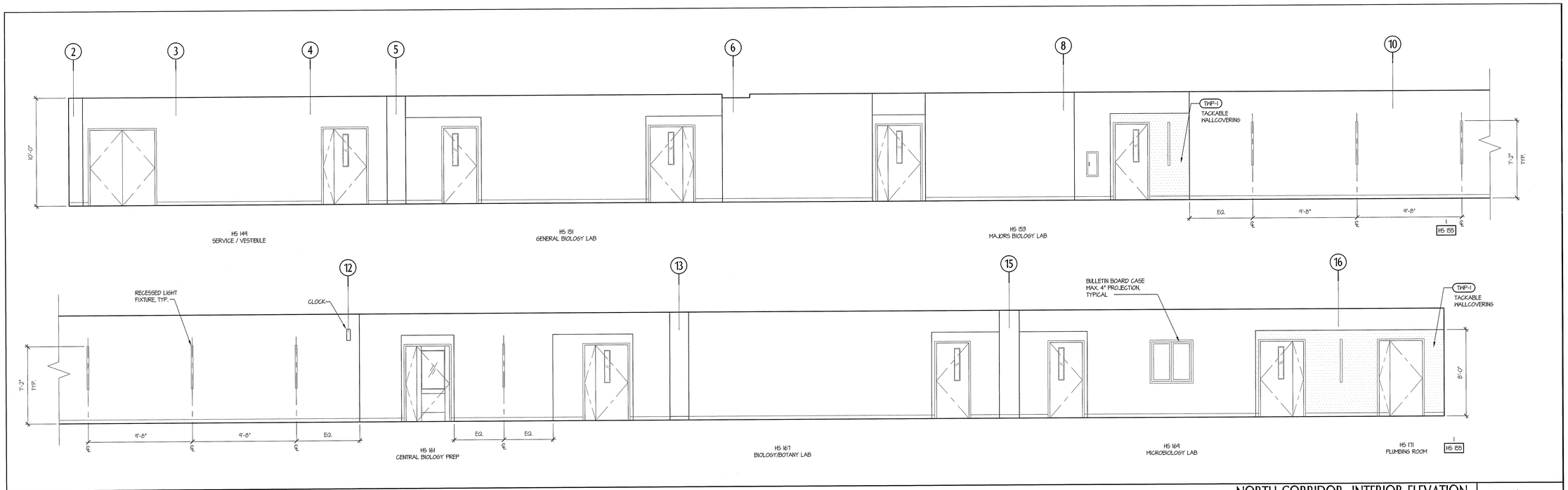

NORTH CORRIDOR INTERIOR ELEVATION

SCALE: 1/4" = 1'-0"

HS 155

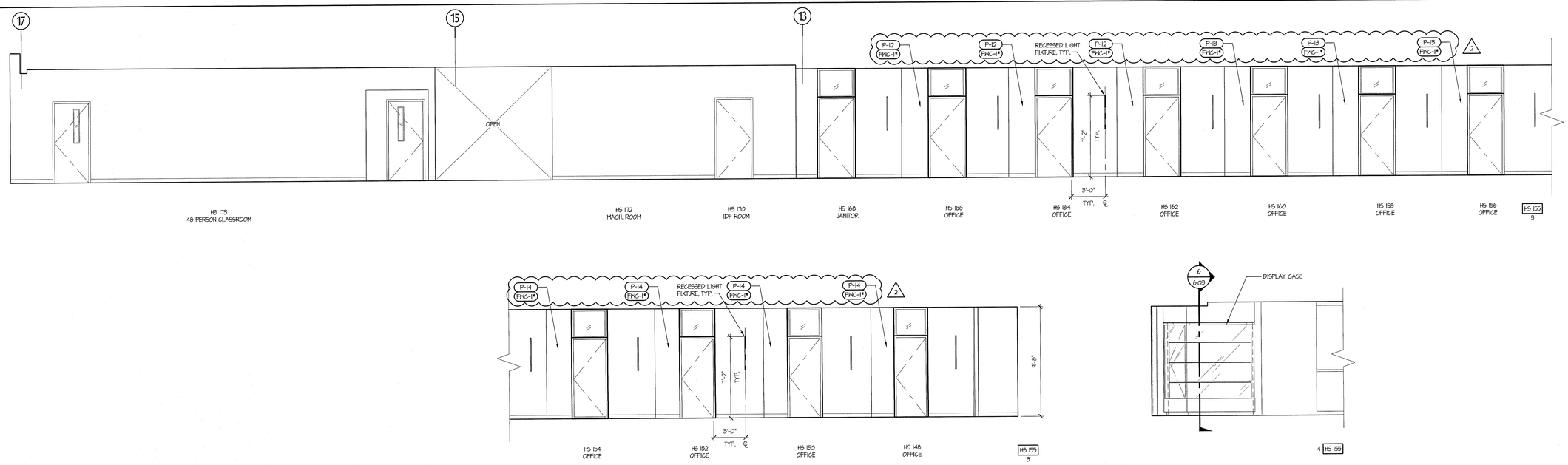

NORTH CORRIDOR INTERIOR ELEVATION

SCALE: 1/4" = 1'-0"

HS 155

tBP
architecture
planning
interiors
management

LICENSED ARCHITECT
STATE OF CALIFORNIA

tBP/Architecture
5455 Wilshire Boulevard, Suite 1200
Los Angeles, CA 90036-4242
ph: 323. 556. 3788 fx: 323. 556. 3799

architect

consultant

IDENTIFICATION STAMP
DIV. OF THE STATE ARCHITECT
OFFICE OF REGULATION SERVICES
File No. 19-C11
Appl No. 03-112201
AC ____ FLS ____ SS ____
DATE ____

DSA Los Angeles Basin Regional Office
700 North Alameda Street, Suite 5-500
Los Angeles, California 90012
ph: 213/897-3995 fx: 213/897-3159/0726

agency

ANTELOPE VALLEY COLLEGE HEALTH & SCIENCE BUILDING

ANTELOPE VALLEY COMMUNITY COLLEGE DISTRICT
3041 WEST AVENUE K
LANCASTER, CA 93536-5426

owner

tBP project number : 20641.00

file name: A-0803-INT.DWG

drawn by: JT/BDV checked by: MK

date: JULY 30, 2009 - 100% CD

Rev:	date:	description:
2	2/26/10	ADDENDUM #2

THIS DRAWING AND THE DESIGNS, DEPICTIONS, IDEAS AND OTHER INFORMATION CONTAINED HEREIN CONSTITUTE UNPUBLISHED WORK OF tBP/ARCHITECTURE AND SHALL REMAIN THE PROPERTY OF tBP/ARCHITECTURE IN PERPETUITY. NO PART THEREOF SHALL BE REPRODUCED, DISCLOSED, DISTRIBUTED, SOLD, PUBLISHED OR OTHERWISE USED IN ANY WAY WITHOUT THE ADVANCED EXPRESS WRITTEN CONSENT OF tBP/ARCHITECTURE.

drawing title:
INTERIOR ELEVATIONS
1ST F. NORTH CORRIDOR

drawing no.:
A-8.03

drawing - of -

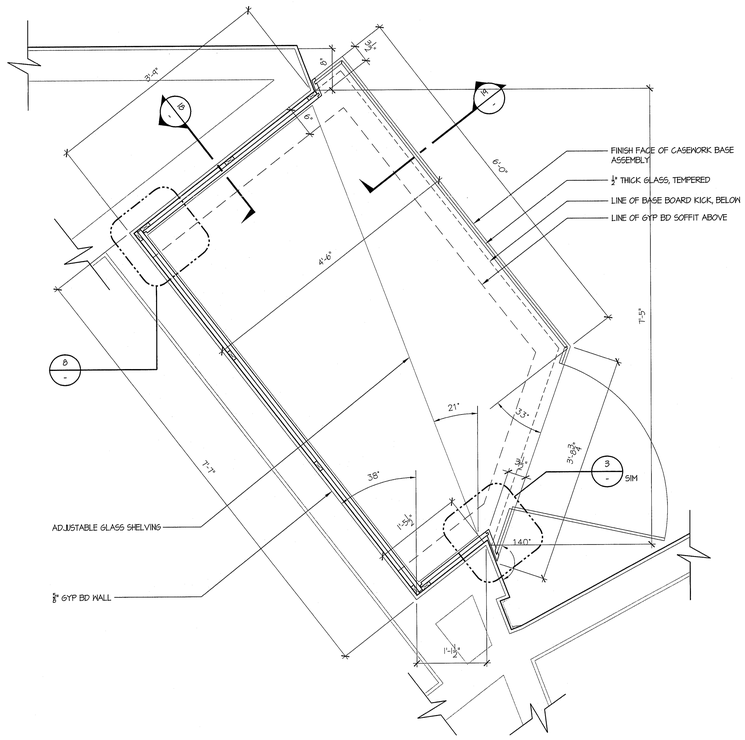

CUSTOM CASWORK DISPLAY
ENLARGED PLAN
SCALE: 1" = 1'-0"
7

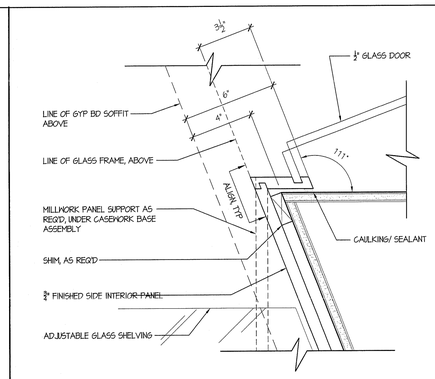

CUSTOM CASWORK DISPLAY
PLAN DETAIL
SCALE: 3" = 1'-0"
3

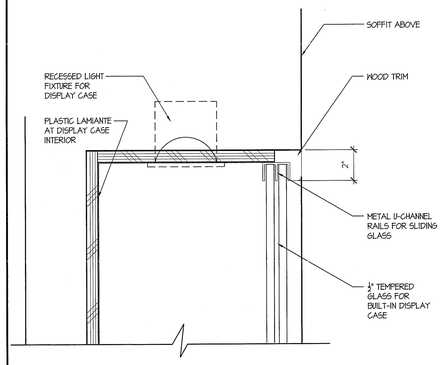

DISPLAY CASE TOP DETAIL
IN ADMINISTRATION SUITE
SCALE: 3" = 1'-0"
4

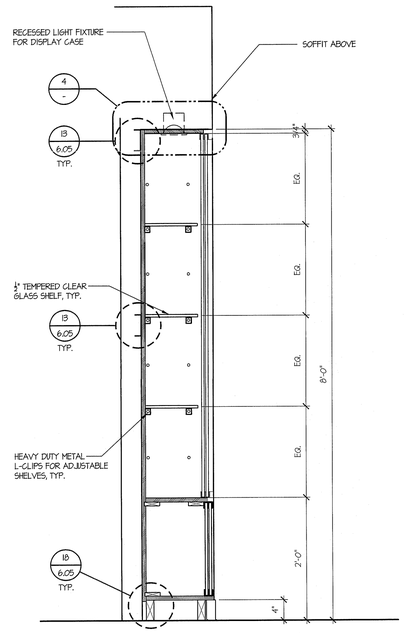

NOTE: SEE 18/6.05 FOR TYPICAL CASEWORK ANCHORAGE

SECTION THROUGH DISPLAY CASE
IN ADMINISTRATION SUITE
SCALE: 1" = 1'-0"
10

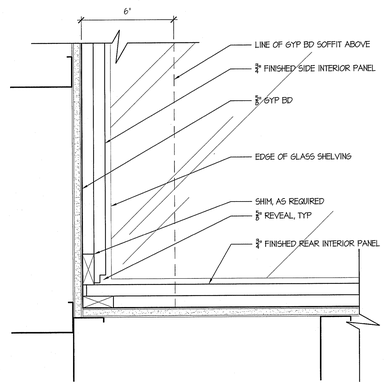

CUSTOM CASWORK DISPLAY
PLAN DETAIL
SCALE: 3" = 1'-0"
8

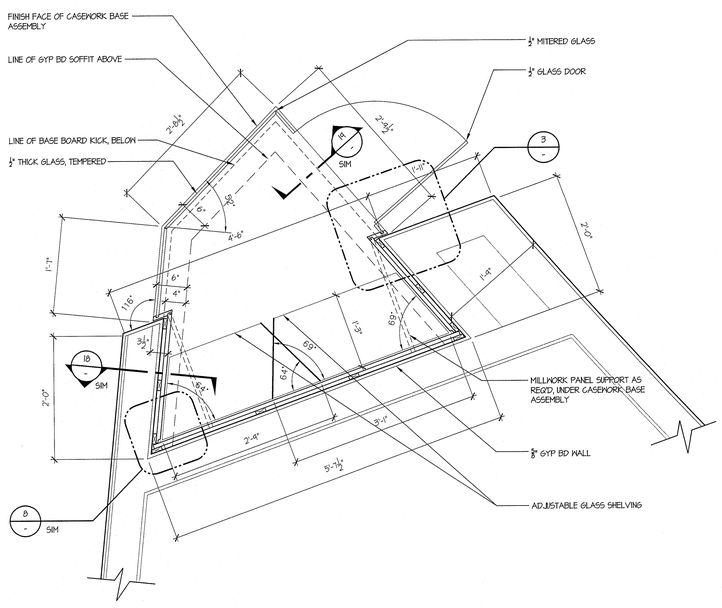

CUSTOM CASEWORK DISPLAY
ENLARGED PLAN
SCALE: 1" = 1'-0"
17

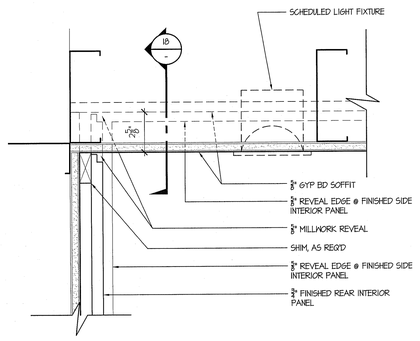

CUSTOM CASWORK DISPLAY
SECTION DETAIL
SCALE: 3" = 1'-0"
13

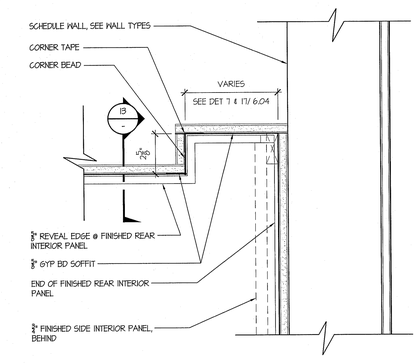

CUSTOM CASWORK DISPLAY
SECTION DETAIL
SCALE: 3" = 1'-0"
18

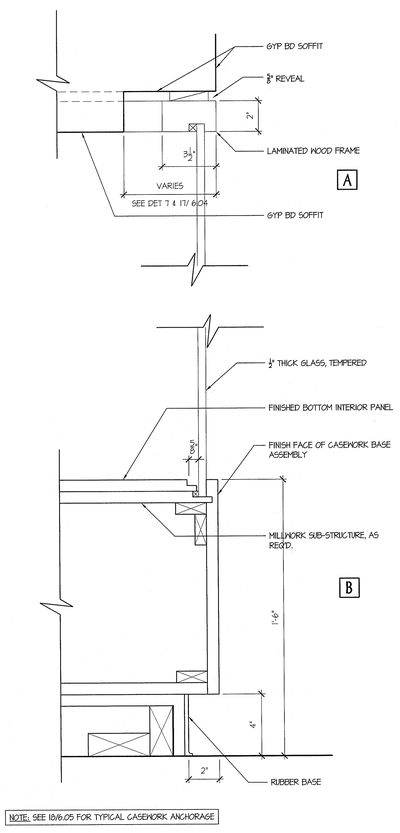

NOTE: SEE 18/6.05 FOR TYPICAL CASEWORK ANCHORAGE

CUSTOM CASWORK DISPLAY
SECTION DETAIL
SCALE: 3" = 1'-0"
19

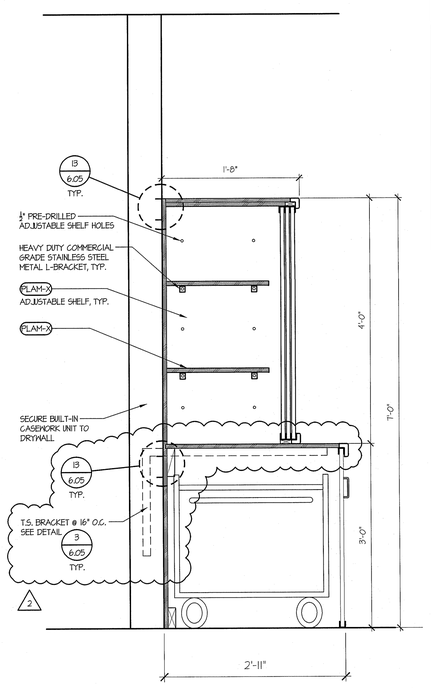

CASEWORK SECTION OF TYP. TEACHING WALL
AND MANIKIN STORAGE BELOW
SCALE: 1" = 1'-0"
20

tBP
architecture
planning
interiors
management

LICENSED ARCHITECT
STATE OF CALIFORNIA

tBP/Architecture
5455 Wilshire Boulevard, Suite 1200
Los Angeles, CA 90036-4242
ph: 323. 556. 3788 fx: 323. 556. 3799

architect

consultant

IDENTIFICATION STAMP
DIV. OF THE STATE ARCHITECT
OFFICE OF REGULATION SERVICES
File No. 19-C11
Appl No. 03-112201
AC _____ FLS _____ SS _____
DATE _____

DSA Los Angeles Basin Regional Office
700 North Alameda Street, Suite 5-500
Los Angeles, California 90012
ph: 213/897-3995 fx: 213/897-3159/0726

agency

ANTELOPE VALLEY COLLEGE HEALTH & SCIENCE BUILDING

ANTELOPE VALLEY COMMUNITY COLLEGE DISTRICT
3041 WEST AVENUE K
LANCASTER, CA 93536-5426

owner

tBP project number : 20641.00
file name: D11-0604.Dwg
drawn by: ? checked by: ?
date: JULY 30, 2009 - 100% CD

Rev:	date:	description:
2	2/26/10	ADDENDUM #2

THIS DRAWING AND THE DESIGNS, DEPICTIONS, IDEAS AND OTHER INFORMATION CONTAINED HEREIN CONSTITUTE UNPUBLISHED WORK OF tBP/ARCHITECTURE AND SHALL REMAIN THE PROPERTY OF tBP/ARCHITECTURE IN PERPETUITY. NO PART THEREOF SHALL BE REPRODUCED, DISCLOSED, DISTRIBUTED, SOLD, PUBLISHED OR OTHERWISE USED IN ANY WAY WITHOUT THE ADVANCED EXPRESS WRITTEN CONSENT OF tBP/ARCHITECTURE.

drawing title:
CASEWORK DETAILS

drawing no.:
6.04
drawing of

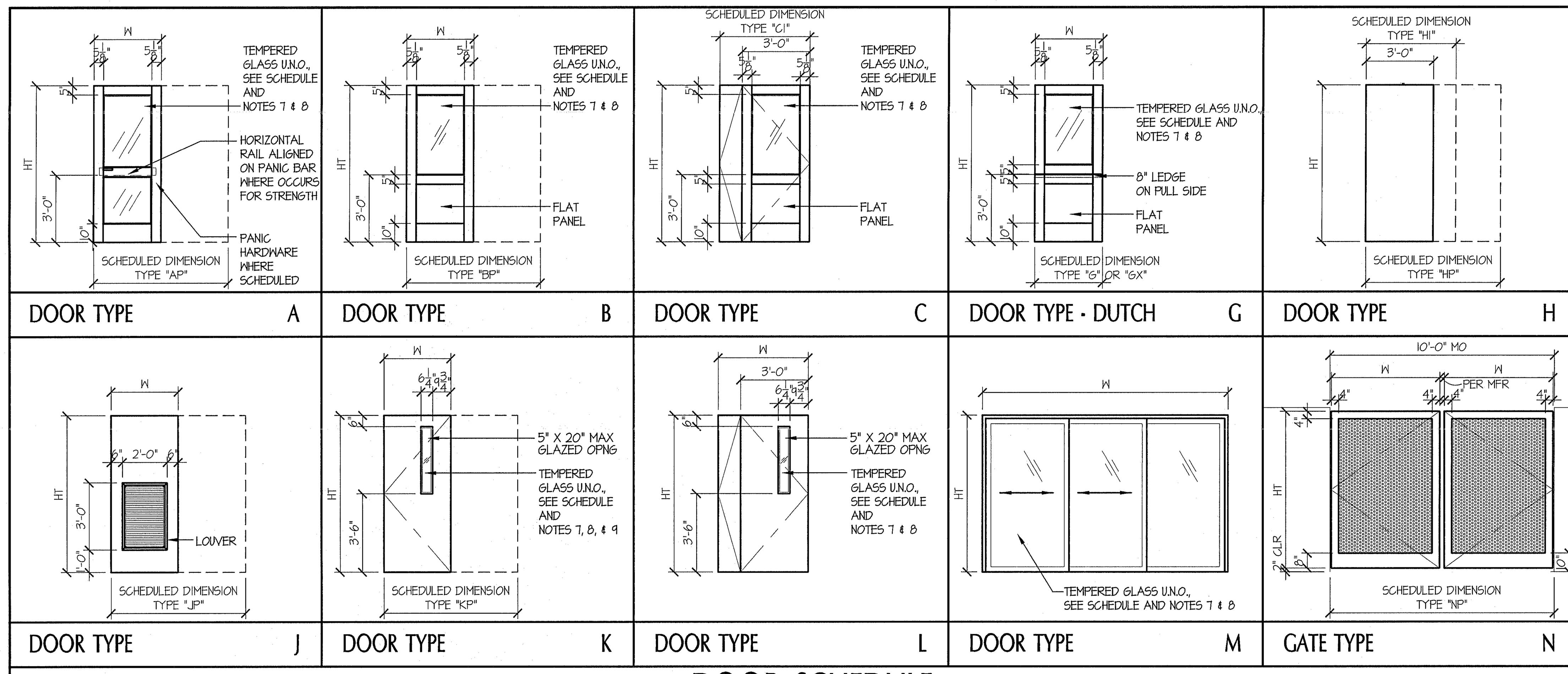

ABBREVIATIONS

AFP	ACCORDION TYPE PARTITION
ALUM	ALUMINUM
ANOD	ANODIZED COATING, CLEAR, FF
AS	ACID STAIN
ATFD	ACCORDION TYPE FIRE DOOR
CI	CONSISTS OF 3'-0" TYPE C DOOR + 1'-0" TYPE C DOOR
DEM PART	DEMOUNTABLE PARTITION
(E)	EXISTING
EP	EPOXY PAINT
FF	FACTORY FINISH
FFD	FOLDING FABRIC DOOR
FPP	FOLDING PANEL PARTITION
FPWD	FOLDING PANEL WOOD DOOR
GL	GLASS
HCN	HOLLOW CORE NATURAL FINISH
HCP	HOLLOW CORE PAINT FINISH
HI	CONSISTS OF 3'-0" TYPE H DOOR + 1'-0" TYPE H DOOR
HM	HOLLOW METAL
IHM	INSULATED HOLLOW METAL
HP	PAIR OF TYPE H DOOR
LAQ	LACQUER FINISH
MCN	MINERAL CORE NATURAL FINISH
MCP	MINERAL CORE PAINT FINISH
PE	PAINT EGGSHELL
PF	PAINT FLAT
PG	PAINT GLOSS
PH	EMERGENCY EGRESS HARDWARE
PS	PREFINISHED STEEL
PSG	PAINT SEMI-GLOSS
RM	REMOVABLE MULLION
S	SEAL
SCN	SOLID CORE NATURAL FINISH
SCP	SOLID CORE PAINT FINISH
SCPL	SOLID CORE PLASTIC LAMINATE
SCWD	SOLID CORE WOOD
SF	STAIN FINISH
SST	STAINLESS STEEL
STL	STEEL
SWD	SOLID WOOD
UG	UNGLAZED
VF	VARNISH
W	WAX

NOTES

1. DOORS SHALL BE 1-3/4" THICK, UNLESS NOTED OTHERWISE.
2. THE LETTER 'P' FOLLOWING THE 'DOOR TYPE' DESIGNATION IN THE DOOR SCHEDULE INDICATES PAIR OF DOORS. BOTH DOOR LEAVES ARE THE SAME SIZE, UNLESS NOTED OTHERWISE.
3. THE LETTER 'X' FOLLOWING THE 'DOOR TYPE' LETTER IN THE DOOR SCHEDULE INDICATES A FIXED DOOR. SCHEDULE DIMENSION INCLUDES FIXED DOOR, UNLESS NOTED OTHERWISE.
4. FIXED DOORS SHALL BE OF THE SAME MATERIAL, CONSTRUCTION, AND THICKNESS AS DOOR LEAF, AND SHALL BE PROVIDED BY THE SAME MANUFACTURER, UNLESS NOTED OTHERWISE.
5. LOUVERS IN EXTERIOR DOORS SHALL BE VANDAL-PROOF, SECURITY TYPE.
6. GLASS IN ALL FIRE RATED DOORS SHALL BE U.L. LISTED, 1/4" THICK, 45 MINUTE, CERAMIC GLASS, INSTALLED IN HOLLOW METAL FRAMES. GLASS LITE IN 60 MINUTE FIRE RATED ASSEMBLIES SHALL NOT EXCEED 100 SQUARE INCHES.
7. GLASS IN NON-RATED EXTERIOR DOORS SHALL BE CLEAR TEMPERED GLASS.
8. PROVIDE STAINLESS STEEL KICKPLATE BOTH SIDES OF ALL DOORS
9. GLASS IN FIRE-RATED DOORS SHALL BE 60 MINUTE RATED, TYP.
9. EXTERIOR DOOR REQUIREMENTS:

   ALL EXTERIOR DOORS IN BUILDINGS, INCLUDING, BUT NOT LIMITED TO DOORS OF TOILETS AND STORAGE ROOMS, SHALL CONFORM WITH THE REQUIREMENTS OF THE LATEST EDITION OF THE CALIFORNIA BUILDING CODE:
   - EXIT DOOR SHALL BE OPERABLE FROM THE INSIDE WITHOUT THE USE OF A KEY OR ANY SPECIAL KNOWLEDGE OR EFFORT.
   - HAND ACTIVATED DOOR OPENING HARDWARE SHALL BE CENTERED BETWEEN 30" AND 44" ABOVE FINISH FLOOR. PANIC HARDWARE SHALL BE 36" TO 44" ABOVE FINISH FLOOR.
   - DEAD BOLTS ARE NOT PERMITTED UNLESS OPERABLE WITH A SINGLE EFFORT LEVER TYPE HARDWARE.
   - ALL ROOMS SERVING AN OCCUPANCY LOAD OF 50 OR GREATER AND DOORS LOCATED ON THE DISCHARGE OF EXIT CORRIDORS ARE REQUIRED TO BE PROVIDED WITH PANIC HARDWARE (CBC 1007.3.10).
   - ALL FIRE DOOR LABELS SHALL COMPLY WITH 2007 C.B.C. 715.4.5
10. BID ALTERNATE #8, HARDWARE GROUPS: THERE ARE TWO HARDWARE GROUP NUMBERS, (01 / 02). THE FIRST NUMBER REPRESENTS THE BASE BID (DOORS WITH CARD READERS & ACCESS CONTROL). THE SECOND NUMBER REPRESENTS THE DEDUCTIVE ALTERNATE (DOORS WITHOUT CARD READERS, KEY LOCKS ONLY).

DOOR SCHEDULE

FIRST FLOOR - SOUTH WING

DOOR NO.	DIMENSION WIDTH	DIMENSION HEIGHT	DOOR TYPE	DOOR MTL	DOOR FINISH	DOOR COLOR	FRAME MTL	FRAME FINISH	FRAME COLOR	DETAILS HEAD	DETAILS TRANSOM	DETAILS JAMB	DETAILS JAMB	DETAILS THRESHOLD	HDWR GROUP (SEE NOTE #10)	PANIC HDWR	DOOR ASSEMBLY RATING	REMARKS	SIGNAGE (ALSO SEE SIGNAGE PLANS SHEETS A-10.01 - A-10.06) PULL SIDE TEXT / PUSH SIDE TEXT	DETAIL
100	3'-0"	7'-0"	H	SCWD	PSG	-	HM	PSG	-	3 / 8.21	2 / 8.40	7 / 8.21	7 / 8.21	19 / 8.21	001 / 001	-	-	- KEYED LOCK, NON-MONITORED	- HS100 / (NAME & TITLE)	3, 4 / 10.01
101	4'-0"	7'-0"	L	SCWD	PSG	-	HM	PSG	-	2 / 8.21	- / -	6 / 8.21	11 / 8.21	19 / 8.21	050 / 091	-	-	STC 50 CARD READER LOCK, PROGRAMMED	HS101 / EMT LAB EXIT ROUTE	2, 13 / 10.01
101A	3'-0"	7'-0"	H	SCWD	PSG	-	HM	PSG	-	2 / 8.21	- / -	7 / 8.21	11 / 8.21	- / -	003 / 003	-	-	- KEYED LOCK, NON-MONTORED	- HS101A / EMT STORAGE	2 / 10.01
101B	3'-0"	7'-0"	A	ALUM	ANOD	-	ALUM	ANOD	-	1 / 8.11	- / -	2 / 8.11	2 / 8.11	IF SIM. / 3.04	092 / 018	-	-	CLOSER KEYED LOCK, MONITORED	- EXIT	12 / 10.01
101C	2'-6"	7'-0"	H	SCWD	PSG	-	HM	PSG	-	2 / 8.21	- / -	7 / 8.21	11 / 8.21	- / -	005 / 005	-	-	- KEYED LOCK, NON-MONTORED	- -	- / -
102	3'-0"	7'-0"	H	SCWD	PSG	-	HM	PSG	-	3 / 8.21	2 / 8.40	7 / 8.21	7 / 8.21	19 / 8.21	001 / 001	-	-	- KEYED LOCK, NON-MONTORED	- HS102 / (NAME & TITLE)	3, 4 / 10.01
103	3'-0"	7'-0"	K	SCWD	PSG	-	HM	PSG	-	2 / 8.21	- / -	7 / 8.21	12 / 8.21	17 / 8.21	093 / 006	YES	60 MIN.	STC 51, CLOSER KEYED LOCK, MONITORED	HS103 / CLASSROOM EXIT ROUTE	2, 13 / 10.01
103A	3'-0"	7'-0"	K	SCWD	PSG	-	HM	PSG	-	2 / 8.21	- / -	6 / 8.21	7 / 8.21	17 / 8.21	041 / 006	YES	60 MIN.	STC 51, CLOSER CARD READER LOCK, PROGRAMMED	HS103 / CLASSROOM EXIT ROUTE	2, 13 / 10.01
103B	2'-6"	7'-0"	H	SCWD	PSG	-	HM	PSG	-	2 / 8.21	- / -	7 / 8.21	11 / 8.21	- / -	005 / 005	-	-	- KEYED LOCK, NON-MONTORED	- -	- / -
104	3'-0"	7'-0"	H	SCWD	PSG	-	HM	PSG	-	3 / 8.21	2 / 8.40	7 / 8.21	7 / 8.21	19 / 8.21	001 / 001	-	-	- KEYED LOCK, NON-MONTORED	- HS104 / (NAME & TITLE)	3, 4 / 10.01
105	3'-0"	7'-0"	K	SCWD	PSG	-	HM	PSG	-	2 / 8.21	- / -	7 / 8.21	12 / 8.21	17 / 8.21	093 / 006	YES	60 MIN.	STC 51, CLOSER KEYED LOCK, MONITORED	HS105 / CLASSROOM EXIT ROUTE	2, 13 / 10.01
105A	3'-0"	7'-0"	K	SCWD	PSG	-	HM	PSG	-	2 / 8.21	- / -	6 / 8.21	7 / 8.21	17 / 8.21	041 / 006	YES	60 MIN.	STC 51, CLOSER CARD READER LOCK, PROGRAMMED	HS105 / CLASSROOM EXIT ROUTE	2, 13 / 10.01
105B	2'-6"	7'-0"	H	SCWD	PSG	-	HM	PSG	-	2 / 8.21	- / -	7 / 8.21	7 / 8.21	- / -	005 / 005	-	-	- KEYED LOCK, NON-MONTORED	- -	- / -
106	3'-0"	7'-0"	H	SCWD	PSG	-	HM	PSG	-	3 / 8.21	2 / 8.40	7 / 8.21	7 / 8.21	19 / 8.21	001 / 001	-	-	- KEYED LOCK, NON-MONTORED	- HS106 / (NAME & TITLE)	3, 4 / 10.01
107	6'-0"	7'-0"	AP	ALUM	ANOD	-	ALUM	ANOD	-	14 / 8.11	- / -	12 / 8.11	13 / 8.11	4 / 8.11	042 / 007	YES	-	CLOSER, 90 DEG. INHIBITOR, N. LEAF CARD READER LOCK, PROGRAMMED	(SYMBOL OF ACCESSIBILITY) -	15 / 10.01
108	3'-0"	7'-0"	H	SCWD	PSG	-	HM	PSG	-	3 / 8.21	2 / 8.40	7 / 8.21	7 / 8.21	19 / 8.21	001 / 001	-	-	- KEYED LOCK, NON-MONTORED	- HS108 / (NAME & TITLE)	3, 4 / 10.01
109	3'-0"	7'-0"	K	SCWD	PSG	-	HM	PSG	-	2 / 8.21	- / -	6 / 8.21	7 / 8.21	17 / 8.21	039 / 002	YES	-	STC 50 CARD READER LOCK, PROGRAMMED	HS109 / CLASSROOM, DISTANCE LEARNING EXIT ROUTE	2, 13 / 10.01
109A	3'-0"	7'-0"	H	IHM	PSG	-	HM	PSG	-	1 / 8.12	- / -	2 / 8.12	2 / 8.12	3 / 8.12	040 / 004	YES	-	CLOSER KEYED LOCK, MONITORED	- EXIT	12 / 10.01
109B	6'-0"	7'-0"	HP	SCWD	PSG	-	HM	PSG	-	2 / 8.21	- / -	6 / 8.21	12 / 8.21	- / -	044 / 044	-	-	- KEYED LOCK, NON-MONTORED	- -	- / -
110	3'-0"	7'-0"	H	SCWD	PSG	-	HM	PSG	-	3 / 8.21	2 / 8.40	7 / 8.21	7 / 8.21	19 / 8.21	001 / 001	-	-	- KEYED LOCK, NON-MONTORED	- HS110 / (NAME & TITLE)	3, 4 / 10.01
111	6'-0"	7'-0"	KP	SCWD	PSG	-	HM	PSG	-	2 / 8.21	- / -	7 / 8.21	7 / 8.21	17 / 8.21	045 / 009	YES	-	STC 50 CARD READER LOCK, PROGRAMMED	HS111 / RT/MOA LAB EXIT ROUTE	2, 13 / 10.01
111A	3'-0"	7'-0"	H	SCWD	PSG	-	ALUM	ANOD	-	5 / 8.21	- / -	4 / 8.40	10 / 8.21	- / -	081 / 081	-	45 MIN.	- KEYED LOCK, NON-MONTORED	HS111E / RT & VENTILATOR STORAGE -	2 / 10.01
111B	3'-0"	7'-0"	H	SCWD	PSG	-	HM	PSG	-	2 / 8.21	- / -	7 / 8.21	7 / 8.21	- / -	070 / 070	-	-	- KEYED LOCK, NON-MONTORED	- HS111F / STORAGE	2 / 10.01
111C	3'-0"	7'-0"	H	SCWD	PSG	-	HM	PSG	-	2 / 8.21	- / -	6 / 8.21	7 / 8.21	- / -	075 / 075	-	60 MIN.	CLOSER KEYED LOCK, NON-MONTORED	- HS111C / GAS STORAGE	2 / 10.01
111D	3'-0"	7'-0"	H	STL	PSG	-	HM	PSG	-	2 (SIM) / 8.21	- / -	6 (SIM) / 8.21	7 (SIM) / 8.21	- / -	082 / 082	-	60 MIN.	STC 61, CLOSER KEYED LOCK, NON-MONTORED	HS111D / COMPRESSOR ROOM -	2 / 10.01
111E	3'-0"	7'-0"	H	IHM	PSG	-	HM	PSG	-	1 / 8.12	- / -	2 / 8.12	4 / 8.12	3 / 8.12	040 / 004	-	-	CLOSER KEYED LOCK, MONITORED	- EXIT	12 / 10.01
111F	2'-6"	7'-0"	H	SCWD	PSG	-	HM	PSG	-	2 / 8.21	- / -	11 / 8.21	12 / 8.21	- / -	005 / 005	-	-	- KEYED LOCK, NON-MONTORED	- -	- / -
112	3'-0"	7'-0"	H	SCWD	PSG	-	HM	PSG	-	3 / 8.21	2 / 8.40	7 / 8.21	7 / 8.21	19 / 8.21	001 / 001	-	-	- KEYED LOCK, NON-MONTORED	- HS112 / (NAME & TITLE)	3, 4 / 10.01
113	3'-0"	7'-0"	K	SCWD	PSG	-	HM	PSG	-	2 / 8.21	- / -	7 / 8.21	7 / 8.21	17 / 8.21	043 / 008	-	-	STC 50 CARD READER LOCK, PROGRAMMED	HS113 / CLASSROOM -	2 / 10.01
113A	2'-6"	7'-0"	H	SCWD	PSG	-	HM	PSG	-	2 / 8.21	- / -	11 (SIM) / 8.21	12 / 8.22	- / -	005 / 005	-	-	- KEYED LOCK, NON-MONTORED	- -	- / -
114	3'-0"	7'-0"	H	SCWD	PSG	-	HM	PSG	-	3 / 8.21	2 / 8.40	7 / 8.21	7 / 8.21	19 / 8.21	001 / 001	-	-	- KEYED LOCK, NON-MONTORED	- HS114 / (NAME & TITLE)	3, 4 / 10.01
116	3'-6"	7'-0"	H	SCWD	PSG	-	HM	PSG	-	2 / 8.21	- / -	7 / 8.21	7 / 8.21	17 / 8.21	011 / 011	-	-	- KEYED LOCK, NON-MONTORED	- HS116 / MACHINE ROOM	2 / 10.01
117	3'-0"	7'-0"	K	SCWD	PSG	-	HM	PSG	-	2 / 8.21	- / -	7 / 8.21	7 / 8.21	17 / 8.21	047 / 047	YES	-	- PASSAGE DOOR	- EXIT ROUTE	13 / 10.01
117A	3'-0"	7'-0"	A	ALUM	ANOD	-	ALUM	ANOD	-	1 / 8.11	1 / 8.11	2 / 8.11	2 / 8.11	4 / 8.11	051 / 004	YES	-	CLOSER CARD READER LOCK, PROGRAMMED	- EXIT	12 / 10.01
118	3'-0"	7'-0"	H	SCWD	PSG	-	HM	PSG	-	3 / 8.21	2 / 8.40	7 / 8.21	7 / 8.21	19 / 8.21	001 / 001	-	-	- KEYED LOCK, NON-MONTORED	- HS118 / (NAME & TITLE)	3, 4 / 10.01
119	3'-0"	7'-0"	K	SCWD	PSG	-	HM	PSG	-	2 / 8.21	- / -	6 / 8.21	7 / 8.21	17 / 8.21	043 / 008	-	-	STC 50 CARD READER LOCK, PROGRAMMED	HS119 / CLASSROOM -	2 / 10.01
119A	2'-6"	7'-0"	H	SCWD	PSG	-	HM	PSG	-	2 / 8.21	- / -	11 / 8.21	12 / 8.21	- / -	005 / 005	-	-	- KEYED LOCK, NON-MONTORED	- -	- / -
120	3'-0"	7'-0"	H	SCWD	PSG	-	HM	PSG	-	3 / 8.21	2 / 8.40	7 / 8.21	7 / 8.21	19 / 8.21	001 / 001	-	-	- KEYED LOCK, NON-MONTORED	- HS120 / (NAME & TITLE)	3, 4 / 10.01
121	3'-0"	7'-0"	A	ALUM	ANOD	-	ALUM	ANOD	-	3 / 8.21	3 / 8.21	4 / 8.40	5 / 8.21	17 / 8.21	094 / 013	-	-	STC 50 KEYED LOCK, NON-MONTORED	- HS121 / GROUP STUDY ROOM	2 / 10.01
122	3'-0"	7'-0"	H	SCWD	PSG	-	HM	PSG	-	3 / 8.21	2 / 8.40	7 / 8.21	7 / 8.21	19 / 8.21	001 / 001	-	-	- KEYED LOCK, NON-MONTORED	- HS122 / (NAME & TITLE)	3, 4 / 10.01
123	3'-0"	7'-0"	H	SCWD	PSG	-	HM	PSG	-	2 / 8.21	- / -	7 / 8.21	12 / 8.21	16 / 8.21	013 / 013	-	-	STC 51, CLOSER KEYED LOCK, NON-MONTORED	- MEN (WALL & DOOR MOUNTED)	7, 9 / 10.01
124	3'-0"	7'-0"	H	SCWD	PSG	-	HM	PSG	-	3 / 8.21	2 / 8.40	7 / 8.21	7 / 8.21	19 / 8.21	001 / 001	-	-	- KEYED LOCK, NON-MONTORED	- HS124 / (NAME & TITLE)	3, 4 / 10.01
125	3'-0"	7'-0"	H	SCWD	PSG	-	HM	PSG	-	2 / 8.21	- / -	7 / 8.21	12 / 8.21	16 / 8.21	013 / 013	-	-	STC 51, CLOSER KEYED LOCK, NON-MONTORED	- WOMEN (WALL & DOOR MOUNTED)	6, 8 / 10.01
126	3'-0"	7'-0"	H	SCWD	PSG	-	HM	PSG	-	2 / 8.21	- / -	7A / 8.21	11A / 8.21	19 / 8.21	038 / 013	-	-	- CARD READER LOCK, PROGRAMMED	- HS126 / BDF/IDF	2 / 10.01
126A	3'-0"	7'-0"	H	SCWD	PSG	-	HM	PSG	-	2 / 8.21	- / -	11A / 8.21	7A / 8.21	19 / 8.21	095 / 095	-	-	- KEYED LOCK, NON-MONTORED	HS126A / ELECTRICAL ROOM -	2 / 10.01
127	4'-6"	7'-0"	L	SCWD	PSG	-	HM	PSG	-	2 / 8.21	- / -	7 / 8.21	11 / 8.21	17 / 8.21	096 / 015	-	-	STC 50 KEYED LOCK, MONITORED	HS127 / ANATOMY LAB EXIT ROUTE	2, 13 / 10.01
127A	3'-0"	7'-0"	H	SCWD	PSG	-	HM	PSG	-	2 / 8.21	- / -	7 / 8.21	7 / 8.21	17 / 8.21	097 / 061	-	-	- KEYED LOCK, MONITORED	HS127A / SPECIMEN STORAGE ROOM -	2 / 10.01
127B	4'-0"	7'-0"	C	HM	PSG	-	HM	PSG	-	2 / 8.21	- / -	6 / 8.21	7 / 8.21	17 / 8.21	099 / 017	-	-	STC 50 KEYED LOCK, MONITORED	HS131 / DISSECTION/CADAVER ROOM -	2 / 10.01
127C	3'-0"	7'-0"	K	SCWD	PSG	-	HM	PSG	-	2 / 8.21	- / -	7 / 8.21	11 / 8.21	17 / 8.21	043 / 008	-	-	STC 50 CARD READER LOCK, PROGRAMMED	HS127 / ANATOMY LAB EXIT ROUTE	2, 13 / 10.01
128	3'-0"	7'-0"	H	SCWD	PSG	-	HM	PSG	-	3 / 8.21	2 / 8.40	7 / 8.21	7 / 8.21	19 / 8.21	001 / 001	-	-	- KEYED LOCK, NON-MONTORED	- HS128 / (NAME & TITLE)	3, 4 / 10.01
129	3'-0"	7'-0"	A	ALUM	ANOD	-	ALUM	ANOD	-	1 / 8.11	1 / 8.11	2 / 8.11	3 / 8.11	4 / 8.11	051 / 018	YES	-	CLOSER CARD READER LOCK, PROGRAMMED	(SYMBOL OF ACCESSIBILITY) EXIT	12, 15 / 10.01
130	3'-0"	7'-0"	H	SCWD	PSG	-	HM	PSG	-	3 / 8.21	2 / 8.40	7 / 8.21	7 / 8.21	19 / 8.21	001 / 001	-	-	- KEYED LOCK, NON-MONTORED	- HS130 / (NAME & TITLE)	3, 4 / 10.01
131	4'-0"	7'-0"	L	SCWD	PSG	-	HM	PSG	-	2 / 8.21	- / -	7 / 8.21	7 / 8.21	17 / 8.21	050 / 017	-	-	STC 50 CARD READER LOCK, PROGRAMMED	HS131 / DISSECTION/CADAVER ROOM -	2 / 10.01

DOOR SCHEDULE

FIRST FLOOR - NORTH WING

DOOR NO.	DIMENSION WIDTH	DIMENSION HEIGHT	DOOR TYPE	DOOR MTL	DOOR FINISH	DOOR COLOR	FRAME MTL	FRAME FINISH	FRAME COLOR	DETAILS HEAD	DETAILS TRANSOM	DETAILS JAMB	DETAILS JAMB	DETAILS THRESHOLD	HDWR GROUP (SEE NOTE #10)	PANIC HDWR	DOOR ASSEMBLY RATING	REMARKS	SIGNAGE (ALSO SEE SIGNAGE PLANS SHEETS A-10.01 - A-10.06) PULL SIDE TEXT / PUSH SIDE TEXT	DETAIL
132	3'-0"	7'-0"	H	SCWD	PSG	-	HM	PSG	-	3 / 8.21	2 / 8.40	7 / 8.21	7 / 8.21	19 / 8.21	001 / 001	-	-	- KEYED LOCK, NON-MONTORED	- HS132 / (NAME & TITLE)	3, 4 / 10.01
133	4'-6"	7'-0"	L	SCWD	PSG	-	HM	PSG	-	2 / 8.21	- / -	7 / 8.21	11 / 8.21	17 / 8.21	096 / 015	-	-	STC 50 KEYED LOCK, MONITORED	HS133 / PHYSIOLOGY LAB EXIT ROUTE	2, 13 / 10.01
133A	3'-0"	7'-0"	K	SCWD	PSG	-	HM	PSG	-	2 / 8.21	- / -	7 / 8.21	11 / 8.21	17 / 8.21	043 / 002	-	-	STC 50 CARD READER LOCK, PROGRAMMED	HS133 / PHYSIOLOGY LAB EXIT ROUTE	2, 13 / 10.01
133B	3'-0"	7'-0"	B	HM	PSG	-	HM	PSG	-	2 / 8.21	- / -	11 / 8.21	7 / 8.21	17 / 8.21	097 / 086	-	-	- KEYED LOCK, MONITORED	HS131 / DISSECTION/CADAVER ROOM -	2 / 10.01
133C	3'-0"	7'-0"	B	HM	PSG	-	HM	PSG	-	2 / 8.21	- / -	7 / 8.21	7 / 8.21	17 / 8.21	097 / 086	-	-	- KEYED LOCK, MONITORED	HS133A / LIVE ANIMAL ROOM -	2 / 10.01
134	3'-0"	7'-0"	H	SCWD	PSG	-	HM	PSG	-	3 / 8.21	2 / 8.40	7 / 8.21	7 / 8.21	19 / 8.21	001 / 001	-	-	- KEYED LOCK, NON-MONTORED	- HS134 / (NAME & TITLE)	3, 4 / 10.01
135	4'-0"	7'-0"	L	SCWD	PSG	-	HM	PSG	-	2 / 8.21	- / -	11 / 8.21	11 / 8.21	17 / 8.21	050 / 017	-	-	STC 50 CARD READER LOCK, PROGRAMMED	HS135 / NUTRITION FOOD LAB -	2 / 10.01
135A	3'-0"	7'-0"	H	SCWD	PSG	-	HM	PSG	-	2 / 8.21	- / -	7 / 8.21	12 / 8.21	- / -	113 / 016	-	-	STC 50 KEYED LOCK, MONITORED	- HS135A / WINE STORAGE ROOM	2 / 10.01
136	3'-0"	7'-0"	H	SCWD	PSG	-	HM	PSG	-	3 / 8.21	2 / 8.40	7 / 8.21	7 / 8.21	19 / 8.21	001 / 001	-	-	- KEYED LOCK, NON-MONTORED	- HS136 / (NAME & TITLE)	3, 4 / 10.01
137	6'-0"	7'-0"	HP	SCWD	PSG	-	HM	PSG	-	2 / 8.21	- / -	7 / 8.21	12 / 8.21	17 / 8.21	053 / 019	-	-	- KEYED LOCK, MONITORED	EXIT ROUTE HS137 / CAFE SERVING AREA	2, 13 / 10.01
138	3'-0"	7'-0"	H	SCWD	PSG	-	HM	PSG	-	3 / 8.21	2 / 8.40	7 / 8.21	7 / 8.21	19 / 8.21	001 / 001	-	-	- KEYED LOCK, NON-MONTORED	- HS138 / (NAME & TITLE)	3, 4 / 10.01
140	3'-0"	7'-0"	H	SCWD	PSG	-	HM	PSG	-	3 / 8.21	2 / 8.40	7 / 8.21	7 / 8.21	19 / 8.21	001 / 001	-	-	- KEYED LOCK, NON-MONTORED	- HS140 / (NAME & TITLE)	3, 4 / 10.01
141	6'-0"	7'-0"	KP	SCWD	PSG	-	HM	PSG	-	2 / 8.21	- / -	7 / 8.21	7 / 8.21	- / -	053 / 020	-	-	- KEYED LOCK, NON-MONTORED	HS141 / CAFE KITCHEN -	2 / 10.01
141A	6'-0"	7'-0"	HP	SCWD	PSG	-	HM	PSG	-	2 / 8.21	- / -	7 / 8.21	7 / 8.21	17 / 8.21	053 / 019	-	-	- KEYED LOCK, MONITORED	EXIT ROUTE HS141 / CAFE KITCHEN	2, 13 / 10.01
142	3'-0"	7'-0"	H	SCWD	PSG	-	HM	PSG	-	3 / 8.21	2 / 8.40	7 / 8.21	7 / 8.21	19 / 8.21	001 / 001	-	-	- KEYED LOCK, NON-MONTORED	- HS142 / (NAME & TITLE)	3, 4 / 10.01
143	6'-0"	7'-0"	JP	IHM	PSG	-	HM	PSG	-	1 / 8.12	- / -	2 / 8.12	2 / 8.12	3 / 8.12	054 / 021	-	-	- KEYED LOCK, MONITORED	FIRE SPRINKLER RISER -	20 / 10.01
145	3'-0"	7'-0"	H	IHM	PSG	-	HM	PSG	-	1 / 8.12	- / -	2 / 8.12	2 / 8.12	3 / 8.12	022 / 022	-	-	- KEYED LOCK, MONITORED	- -	- / -
146	6'-0"	7'-0"	AP	ALUM	ANOD	-	ALUM	ANOD	-	15 / 8.11	1 / 8.11	7 / 8.11	8 / 8.11	4 / 8.11	042 / 007	YES	-	CLOSER CARD READER LOCK, PROGRAMMED	(SYMBOL OF ACCESSIBILITY) EXIT	12, 15 / 10.01
147	6'-0"	7'-0"	JP	IHM	PSG	-	HM	PSG	-	1 / 8.12	- / -	2 / 8.12	2 / 8.12	3 / 8.12	056 / 021	YES	-	- KEYED LOCK, MONITORED	FACP BLDG. HS -	19 / 10.01
147A	3'-6"	7'-0"	H	SCWD	PSG	-	HM	PSG	-	2 / 8.21	- / -	6 / 8.21	7 / 8.21	17 / 8.21	046 / 046	-	-	- KEYED LOCK, NON-MONTORED	MACHINE ROOM HS147A / ELEVATOR MACHINE ROOM	2 / 10.01
147B	3'-0"	7'-0"	H	IHM	PSG	-	HM	PSG	-	1 / 8.12	- / -	2 / 8.12	4 / 8.12	3 / 8.12	040 / 023	YES	-	CLOSER CARD READER LOCK, PROGRAMMED	- EXIT	12 / 10.01
147C	3'-0"	7'-0"	H	HM	PSG	-	HM	PSG	-	2 / 8.21	- / -	7 / 8.21	7 / 8.21	- / -	095 / 095	-	-	- KEYED LOCK, NON-MONTORED	HS147 / ELECTRICAL ROOM HS143 / MECHANICAL ROOM	2 / 10.01
148	3'-0"	7'-0"	H	SCWD	PSG	-	HM	PSG	-	3 / 8.21	2 / 8.40	7 / 8.21	7 / 8.21	19 / 8.21	001 / 001	-	-	- KEYED LOCK, NON-MONTORED	- HS148 / (NAME & TITLE)	3, 4 / 10.01
149	4'-0"	7'-0"	L	SCWD	PSG	-	HM	PSG	-	2 / 8.21	- / -	7 / 8.21	7 / 8.21	- / -	055 / 024	YES	-	- CARD READER LOCK, PROGRAMMED	- EXIT ROUTE	13 / 10.01
149A	6'-0"	7'-0"	HP	IHM	PSG	-	HM	PSG	-	1 / 8.12	- / -	2 / 8.12	2 / 8.12	3 / 8.12	098 / 025	YES	-	CLOSER CARD READER LOCK, PROGRAMMED	(SYMBOL OF ACCESSIBILITY) EXIT	12, 15 / 10.01
149B	3'-0"	7'-0"	H	SCWD	PSG	-	HM	PSG	-	2 / 8.21	- / -	7 / 8.21	12 / 8.21	17 / 8.21	100 / 075	-	60 MIN.	CLOSER KEYED LOCK, MONITORED	- HS149A / HAZARDOUS WASTE STORAGE	2 / 10.01
150	3'-0"	7'-0"	H	SCWD	PSG	-	HM	PSG	-	3 / 8.21	2 / 8.40	7 / 8.21	7 / 8.21	19 / 8.21	001 / 001	-	-	- KEYED LOCK, NON-MONTORED	- HS150 / (NAME & TITLE)	3, 4 / 10.01
151	3'-0"	7'-0"	K	SCWD	PSG	-	HM	PSG	-	2 / 8.21	- / -	7 / 8.21	11 / 8.21	17 / 8.21	043 / 008	-	-	STC 50 CARD READER LOCK, PROGRAMMED	HS151 / GENERAL BIOLOGY LAB EXIT ROUTE	2, 13 / 10.01
151A	3'-0"	7'-0"	B	HM	PSG	-	HM	PSG	-	2 / 8.21	- / -	7 / 8.21	7 / 8.21	- / -	070 / 070	-	-	- KEYED LOCK, NON-MONTORED	HS153A / MAJORS BIOLOGY PREP HS151 / GENERAL BIOLOGY LAB	2 / 10.01
151B	4'-0"	7'-0"	L	SCWD	PSG	-	HM	PSG	-	2 / 8.21	- / -	7 / 8.21	11 / 8.21	17 / 8.21	099 / 017	-	-	STC 50 KEYED LOCK, MONITORED	HS151 / GENERAL BIOLOGY LAB EXIT ROUTE	2, 13 / 10.01
152	3'-0"	7'-0"	H	SCWD	PSG	-	HM	PSG	-	3 / 8.21	2 / 8.40	7 / 8.21	7 / 8.21	19 / 8.21	001 / 001	-	-	- KEYED LOCK, NON-MONTORED	- HS152 / (NAME & TITLE)	3, 4 / 10.01
153	4'-0"	7'-0"	L	SCWD	PSG	-	HM	PSG	-	2 / 8.21	- / -	11 / 8.21	11 / 8.21	17 / 8.21	099 / 017	-	-	STC 50 KEYED LOCK, MONITORED	HS153 / MAJORS BIOLOGY LAB EXIT ROUTE	2, 13 / 10.01
153A	3'-0"	7'-0"	B	HM	PSG	-	HM	PSG	-	2 / 8.21	- / -	7 / 8.21	7 / 8.21	- / -	026 / 026	-	-	90 DEGREE INHIBITOR KEYED LOCK, NON-MONTORED	HS153 / MAJORS BIOLOGY LAB HS153A / MAJORS BIOLOGY PREP	2 / 10.01
153B	3'-0"	7'-0"	K	SCWD	PSG	-	HM	PSG	-	2 / 8.21	- / -	7 / 8.21	11 / 8.21	17 / 8.21	043 / 008	-	-	STC 50 CARD READER LOCK, PROGRAMMED	HS153 / MAJORS BIOLOGY LAB EXIT ROUTE	--- / 10.01
154	3'-0"	7'-0"	H	SCWD	PSG	-	HM	PSG	-	3 / 8.21	2 / 8.40	7 / 8.21	7 / 8.21	19 / 8.21	001 / 001	-	-	- KEYED LOCK, NON-MONTORED	- HS154 / (NAME & TITLE)	3, 4 / 10.01
156	3'-0"	7'-0"	H	SCWD	PSG	-	HM	PSG	-	3 / 8.21	2 / 8.40	7 / 8.21	7 / 8.21	19 / 8.21	001 / 001	-	-	- KEYED LOCK, NON-MONTORED	- HS156 / (NAME & TITLE)	3, 4 / 10.01
157	3'-0"	7'-0"	H	SCWD	PSG	-	HM	PSG	-	2 / 8.21	- / -	7 / 8.21	11 / 8.21	16 / 8.21	013 / 013	-	-	STC 51, CLOSER KEYED LOCK, NON-MONTORED	- MEN (WALL & DOOR MOUNTED)	7, 9 / 10.01
158	3'-0"	7'-0"	H	SCWD	PSG	-	HM	PSG	-	3 / 8.21	2 / 8.40	7 / 8.21	7 / 8.21	19 / 8.21	001 / 001	-	-	- KEYED LOCK, NON-MONTORED	- HS158 / (NAME & TITLE)	3, 4 / 10.01
159	3'-0"	7'-0"	H	SCWD	PSG	-	HM	PSG	-	2 / 8.21	- / -	7 / 8.21	11 / 8.21	16 / 8.21	013 / 013	-	-	STC 51, CLOSER KEYED LOCK, NON-MONTORED	- WOMEN (WALL & DOOR MOUNTED)	6, 8 / 10.01
160	3'-0"	7'-0"	H	SCWD	PSG	-	HM	PSG	-	3 / 8.21	2 / 8.40	7 / 8.21	7 / 8.21	19 / 8.21	001 / 001	-	-	- KEYED LOCK, NON-MONTORED	- HS160 / (NAME & TITLE)	3, 4 / 10.01
161	4'-0"	7'-0"	C	HM	PSG	-	HM	PSG	-	2 / 8.21	- / -	12 / 8.21	12 (SIM) / 8.21	19 / 8.21	052 / 062	-	-	- CARD READER LOCK, PROGRAMMED	HS161 / CENTRAL BIOLOGY PREP EXIT ROUTE	2, 13 / 10.01
161A	3'-0"	7'-0"	B	HM	PSG	-	HM	PSG	-	2 / 8.21	- / -	7 / 8.21	12 / 8.21	- / -	003 / 003	-	-	- KEYED LOCK, NON-MONTORED	- HS161A / (NAME & TITLE)	3, 4 / 10.01
161B	3'-0"	7'-0"	H	HM	PSG	-	HM	PSG	-	2 / 8.21	- / -	7 / 8.21	7 / 8.21	- / -	026 / 026	-	-	- KEYED LOCK, NON-MONTORED	- HS161B / VENTED STORAGE	2 / 10.01
161C	3'-0"	7'-0"	B	HM	PSG	-	HM	PSG	-	2 / 8.21	- / -	7 / 8.21	7 / 8.21	- / -	070 / 070	-	-	- KEYED LOCK, NON-MONTORED	HS153A / MAJORS BIOLOGY PREP HS161 / CENTRAL BIOLOGY PREP	2 / 10.01
161D	3'-0"	7'-0"	B	HM	PSG	-	HM	PSG	-	2 / 8.21	- / -	7 / 8.21	7 / 8.21	- / -	026 / 026	-	-	- KEYED LOCK, NON-MONTORED	HS169A / MICROBIOLOGY PREP HS161 / CENTRAL BIOLOGY PREP	2 / 10.01
161E	3'-0"	7'-0"	B	HM	PSG	-	HM	PSG	-	2 / 8.21	- / -	12 / 8.21	1 / 8.40	- / -	003 / 003	-	-	- KEYED LOCK, NON-MONTORED	- HS161C / (NAME & TITLE)	3, 4 / 10.01
162	3'-0"	7'-0"	H	SCWD	PSG	-	HM	PSG	-	3 / 8.21	2 / 8.40	7 / 8.21	7 / 8.21	19 / 8.21	001 / 001	-	-	- KEYED LOCK, NON-MONTORED	- HS162 / (NAME & TITLE)	3, 4 / 10.01
163	3'-0"	7'-0"	J	HM	PSG	-	HM	PSG	-	2 / 8.21	- / -	7 / 8.21	7 / 8.21	17 / 8.21	010 / 010	-	-	- KEYED LOCK, NON-MONTORED	- HS 163 / ELECTRICAL ROOM	2 / 10.01
164	3'-0"	7'-0"	H	SCWD	PSG	-	HM	PSG	-	3 / 8.21	2 / 8.40	7 / 8.21	7 / 8.21	19 / 8.21	001 / 001	-	-	- KEYED LOCK, NON-MONTORED	- HS164 / (NAME & TITLE)	3, 4 / 10.01
166	3'-0"	7'-0"	H	SCWD	PSG	-	HM	PSG	-	3 / 8.21	2 / 8.40	7 / 8.21	7 / 8.21	19 / 8.21	001 / 001	-	-	- KEYED LOCK, NON-MONTORED	- HS166 / (NAME & TITLE)	3, 4 / 10.01

tBP
architecture planning interiors management
tBP/Architecture
5455 Wilshire Boulevard, Suite 1200
Los Angeles, CA 90036-4242
ph: 323. 556. 3788 fx: 323. 556. 3799
LICENSED ARCHITECT LIA C. PAN, AIA NO. C26074 REN. 4-30-11 STATE OF CALIFORNIA
architect

consultant

IDENTIFICATION STAMP
DIV. OF THE STATE ARCHITECT
OFFICE OF REGULATION SERVICES
File No. 19-C11
Appl No. 03-112201
AC ____ FLS ____ SS ____
DATE ____

DSA Los Angeles Basin Regional Office
700 North Alameda Street, Suite 5-500
Los Angeles, California 90012
ph: 213/897-3995 fx: 213/897-3159/0726
agency

ANTELOPE VALLEY COLLEGE
HEALTH & SCIENCE BUILDING
ANTELOPE VALLEY COMMUNITY COLLEGE DISTRICT
3041 WEST AVENUE K
LANCASTER, CA 93536-5426
owner

tBP project number : 20641.00
file name: Dtl-0801.dwg
drawn by: checked by: -
date: JULY 30, 2009 - 100% CD

Rev:	date:	description:
2	2/26/10	ADDENDUM #2

THIS DRAWING AND THE DESIGNS, DEPICTIONS, IDEAS AND OTHER INFORMATION CONTAINED HEREIN CONSTITUTE UNPUBLISHED WORK OF tBP/ARCHITECTURE AND SHALL REMAIN THE PROPERTY OF tBP/ARCHITECTURE IN PERPETUITY. NO PART THEREOF SHALL BE REPRODUCED, DISCLOSED, DISTRIBUTED, SOLD, PUBLISHED OR OTHERWISE USED IN ANY WAY WITHOUT THE ADVANCED EXPRESS WRITTEN CONSENT OF tBP/ARCHITECTURE.

drawing title:
DOOR SCHEDULE

drawing no.:
8.01
drawing of

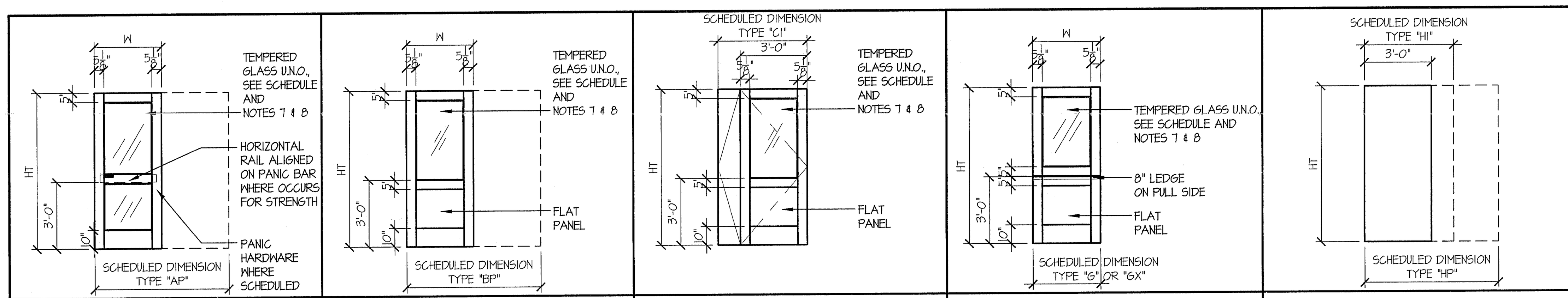

DOOR TYPE A | DOOR TYPE B | DOOR TYPE C | DOOR TYPE - DUTCH G | DOOR TYPE H

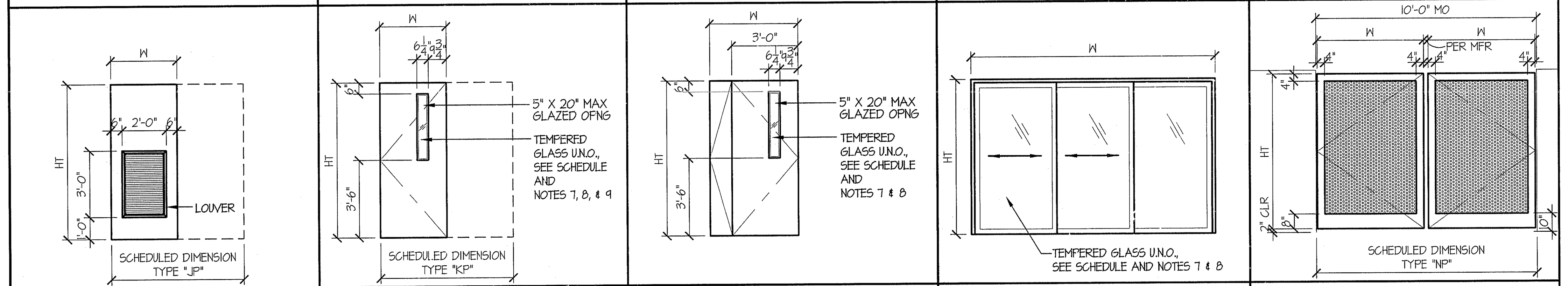

DOOR TYPE J | DOOR TYPE K | DOOR TYPE L | DOOR TYPE M | GATE TYPE N

ABBREVIATIONS

AFP	ACCORDION TYPE PARTITION
ALUM	ALUMINUM
ANOD	ANODIZED COATING, CLEAR, FF
AS	ACID STAIN
ATFD	ACCORDION TYPE FIRE DOOR
CI	CONSISTS OF 3'-0" TYPE C DOOR + 1'-0" TYPE C DOOR
DEM PART	DEMOUNTABLE PARTITION
(E)	EXISTING
EP	EPOXY PAINT
FF	FACTORY FINISH
FFD	FOLDING FABRIC DOOR
FPP	FOLDING PANEL PARTITION
FPWD	FOLDING PANEL WOOD DOOR
GL	GLASS
HCN	HOLLOW CORE NATURAL FINISH
HCP	HOLLOW CORE PAINT FINISH
HI	CONSISTS OF 3'-0" TYPE H DOOR + 1'-0" TYPE H DOOR
HM	HOLLOW METAL
IHM	INSULATED HOLLOW METAL
HP	PAIR OF TYPE H DOOR
LAQ	LACQUER FINISH
MCN	MINERAL CORE NATURAL FINISH
MCP	MINERAL CORE PAINT FINISH
PE	PAINT EGGSHELL
PF	PAINT FLAT
PG	PAINT GLOSS
PH	EMERGENCY EGRESS HARDWARE
PS	PREFINISHED STEEL
PSG	PAINT SEMI-GLOSS
RM	REMOVABLE MULLION
S	SEAL
SCN	SOLID CORE NATURAL FINISH
SCP	SOLID CORE PAINT FINISH
SCPL	SOLID CORE PLASTIC LAMINATE
SCWD	SOLID CORE WOOD
SF	STAIN FINISH
SST	STAINLESS STEEL
STL	STEEL
SWD	SOLID WOOD
UG	UNGLAZED
VF	VARNISH
W	WAX

NOTES

1. DOORS SHALL BE 1-3/4" THICK, UNLESS NOTED OTHERWISE.
2. THE LETTER 'P' FOLLOWING THE 'DOOR TYPE' DESIGNATION IN THE DOOR SCHEDULE INDICATES PAIR OF DOORS. BOTH DOOR LEAVES ARE THE SAME SIZE, UNLESS NOTED OTHERWISE.
3. THE LETTER 'X' FOLLOWING THE 'DOOR TYPE' LETTER IN THE DOOR SCHEDULE INDICATES A FIXED DOOR. SCHEDULE DIMENSION INCLUDES FIXED DOOR, UNLESS NOTED OTHERWISE.
4. FIXED DOORS SHALL BE OF THE SAME MATERIAL, CONSTRUCTION, AND THICKNESS AS DOOR LEAF, AND SHALL BE PROVIDED BY THE SAME MANUFACTURER, UNLESS NOTED OTHERWISE.
5. LOUVERS IN EXTERIOR DOORS SHALL BE VANDAL-PROOF, SECURITY TYPE.
6. GLASS IN ALL FIRE RATED DOORS SHALL BE U.L. LISTED, 1/4" THICK, 45 MINUTE, CERAMIC GLASS, INSTALLED IN HOLLOW METAL FRAMES. GLASS LITE IN 60 MINUTE FIRE RATED ASSEMBLIES SHALL NOT EXCEED 100 SQUARE INCHES.
7. GLASS IN NON-RATED EXTERIOR DOORS SHALL BE CLEAR TEMPERED GLASS.
8. PROVIDE STAINLESS STEEL KICKPLATE BOTH SIDES OF ALL DOORS
9. GLASS IN FIRE-RATED DOORS SHALL BE 60 MINUTE RATED, TYP.

9. EXTERIOR DOOR REQUIREMENTS:

   ALL EXTERIOR DOORS IN BUILDINGS, INCLUDING, BUT NOT LIMITED TO DOORS OF TOILETS AND STORAGE ROOMS, SHALL CONFORM WITH THE REQUIREMENTS OF THE LATEST EDITION OF THE CALIFORNIA BUILDING CODE:
   - EXIT DOOR SHALL BE OPERABLE FROM THE INSIDE WITHOUT THE USE OF A KEY OR ANY SPECIAL KNOWLEDGE OR EFFORT.
   - HAND ACTIVATED DOOR OPENING HARDWARE SHALL BE CENTERED BETWEEN 30" AND 44" ABOVE FINISH FLOOR. PANIC HARDWARE SHALL BE 36" TO 44" ABOVE FINISH FLOOR.
   - DEAD BOLTS ARE NOT PERMITTED UNLESS OPERABLE WITH A SINGLE EFFORT LEVER TYPE HARDWARE.
   - ALL ROOMS SERVING AN OCCUPANCY LOAD OF 50 OR GREATER AND DOORS LOCATED ON THE DISCHARGE OF EXIT CORRIDORS ARE REQUIRED TO BE PROVIDED WITH PANIC HARDWARE (CBC 1007.3.10).
   - ALL FIRE DOOR LABELS SHALL COMPLY WITH 2007 C.B.C. 715.4.5

10. BID ALTERNATE #8, HARDWARE GROUPS: THERE ARE TWO HARDWARE GROUP NUMBERS, (01 / 02). THE FIRST NUMBER REPRESENTS THE BASE BID (DOORS WITH CARD READERS & ACCESS CONTROL). THE SECOND NUMBER REPRESENTS THE DEDUCTIVE ALTERNATE (DOORS WITHOUT CARD READERS, KEY LOCKS ONLY).

DOOR SCHEDULE

FIRST FLOOR - EAST WING

DOOR NO.	DIMENSION WIDTH	DIMENSION HEIGHT	DOOR TYPE	DOOR MTL	DOOR FINISH	DOOR COLOR	FRAME MTL	FRAME FINISH	FRAME COLOR	HEAD	TRANSOM	JAMB	JAMB	THRESHOLD	HDWR GROUP (SEE NOTE #10)	PANIC HDWR	DOOR ASSEMBLY RATING	REMARKS	SIGNAGE (ALSO SEE SIGNAGE PLANS SHEETS A-10.01 - A-10.06) PULL SIDE TEXT / PUSH SIDE TEXT	DETAIL
167	4'-0"	7'-0"	L	SCWD	PSG	-	HM	PSG	-	2 / 8.21	- / -	7 / 8.21	11 / 8.21	17 / 8.21	099 / 017	-	-	STC 50 KEYED LOCK, MONITORED	HS167 / BIOLOGY/BOTANY LAB EXIT ROUTE	2, 13 / 10.01
167A	3'-0"	7'-0"	B	HM	PSG	-	HM	PSG	-	2 / 8.21	- / -	7 / 8.21	7 / 8.21	- / -	114 / 114	-	-	- KEYED LOCK, NON-MONTORED	HS161 / CENTRAL BIOLOGY PREP HS167 / BIOLOGY/BOTANY LAB	2 / 10.01
167B	3'-0"	7'-0"	K	SCWD	PSG	-	HM	PSG	-	2 / 8.21	- / -	7 / 8.21	11 / 8.21	17 / 8.21	043 / 008	-	-	STC 50 CARD READER LOCK, PROGRAMMED	HS167 / BIOLOGY/BOTANY LAB EXIT ROUTE	2, 13 / 10.01
168	3'-0"	7'-0"	H	HM	PSG	-	HM	PSG	-	- / -	2 / 8.40	7 / 8.21	7 / 8.21	19 / 8.21	010 / 010	-	-	- KEYED LOCK, NON-MONITORED	- HS168 / JANITOR	3, 4 / 10.01
169	3'-0"	7'-0"	K	SCWD	PSG	-	HM	PSG	-	2 / 8.21	- / -	7 / 8.21	11 / 8.21	17 / 8.21	043 / 008	-	-	STC 50 CARD READER LOCK, PROGRAMMED	HS169 / MICROBIOLOGY LAB EXIT ROUTE	2, 13 / 10.01
169A	6'-0"	7'-0"	BP	HM	PSG	-	HM	PSG	-	2 / 8.21	- / -	7 / 8.21	7 / 8.21	- / -	063 / 063	-	-	- KEYED LOCK, NON-MONTORED	HS169B / REFRIGERATOR/INCUBATOR RM. -	2 / 10.01
169B	4'-0"	7'-0"	L	SCWD	PSG	-	HM	PSG	-	2 / 8.21	- / -	7 / 8.21	11 / 8.21	17 / 8.21	050 / 017	-	-	STC 50 KEYED LOCK, MONITORED	HS169 / MICROBIOLOGY LAB EXIT ROUTE	2, 13 / 10.01
169C	3'-0"	7'-0"	B	HM	PSG	-	HM	PSG	-	2 / 8.21	- / -	7 / 8.21	7 / 8.21	- / -	026 / 026	-	-	- KEYED LOCK, NON-MONTORED	HS169A / MICROBIOLOGY PREP HS169 / MICROBIOLOGY LAB	2 / 10.01
170	3'-0"	7'-0"	H	HM	PSG	-	HM	PSG	-	2 / 8.21	- / -	7 / 8.21	7 / 8.21	19 / 8.21	101 / 010	-	-	- CARD READER LOCK, PROGRAMMED	- HS170 / IDF ROOM	2 / 10.01
171	4'-0"	7'-0"	HI	SCWD	PSG	-	HM	PSG	-	2 / 8.21	- / -	7 / 8.21	7 / 8.21	17 / 8.21	102 / 102	-	-	STC 50 KEYED LOCK, MONITORED	HS171 / PLUMBING ROOM -	2 / 10.01
172	3'-6"	7'-0"	H	SCWD	PSG	-	HM	PSG	-	2 / 8.21	- / -	7 / 8.21	12 / 8.21	17 / 8.21	030 / 030	-	-	- KEYED LOCK, NON-MONTORED	HS172 / ELEVATOR MACHINE ROOM -	2 / 10.01
173	3'-0"	7'-0"	K	SCWD	PSG	-	HM	PSG	-	2 / 8.21	- / -	6 / 8.21	7 / 8.21	17 / 8.21	039 / 008	YES	-	STC 50 CARD READER LOCK, PROGRAMMED	HS173 / CLASSROOM EXIT ROUTE	2, 13 / 10.01
173A	3'-0"	7'-0"	K	SCWD	PSG	-	HM	PSG	-	2 / 8.21	- / -	7 / 8.21	7 / 8.21	19 / 8.21	103 / 008	YES	-	STC 50 KEYED LOCK, MONITORED	HS173 / CLASSROOM EXIT ROUTE	2, 13 / 10.01
173B	5'-0"	7'-0"	HP	SCWD	PSG	-	HM	PSG	-	2 / 8.21	- / -	6 / 8.21	7 / 8.21	- / -	058 / 058	-	-	- KEYED LOCK, NON-MONTORED	- -	- / -
174	3'-0"	7'-0"	H	SCWD	PSG	-	HM	PSG	-	2 / 8.21	- / -	7 / 8.21	12 / 8.21	16 / 8.21	013 / 013	-	-	STC 56, CLOSER KEYED LOCK, NON-MONTORED	- MEN (WALL & DOOR MOUNTED)	7, 9 / 10.01
175A	3'-0"	7'-0"	A	ALUM	ANOD	-	ALUM	ANOD	-	1 / 8.11	- / -	2 / 8.11	2 / 8.11	4 / 8.11	051 / 018	YES	-	CLOSER CARD READER LOCK, PROGRAMMED	(SYMBOL OF ACCESSIBILITY) EXIT	12, 15 / 10.01
175B	3'-0"	7'-0"	A	ALUM	ANOD	-	ALUM	ANOD	-	5 / 8.21	- / -	10 / 8.21	4 / 8.40	- / -	012 / 012	YES	-	CLOSER PASSAGE DOOR	- EXIT ROUTE	13 / 10.01
175C	6'-0"	7'-0"	AP	ALUM	ANOD	-	ALUM	ANOD	-	1 / 8.11	- / -	2 / 8.11	2 / 8.11	4 / 8.11	042 / 007	YES	-	CLOSER CARD READER LOCK, PROGRAMMED	(SYMBOL OF ACCESSIBILITY) EXIT	12, 15 / 10.01
176	3'-0"	7'-0"	H	SCWD	PSG	-	HM	PSG	-	2 / 8.21	- / -	7 / 8.21	12 / 8.21	16 / 8.21	013 / 013	-	-	STC 51, CLOSER KEYED LOCK, NON-MONTORED	- WOMEN (WALL & DOOR MOUNTED)	6, 8 / 10.01
177	3'-0"	7'-0"	A	ALUM	ANOD	-	ALUM	ANOD	-	3 / 8.21	3 / 8.21	5 / 8.21	4 / 8.40	17 / 8.21	016 / 016	-	-	STC 50 KEYED LOCK, NON-MONTORED	- HS177 / MEETING ROOM	2 / 10.01
178	3'-0"	7'-0"	H	SCWD	PSG	-	HM	PSG	-	2 / 8.21	- / -	7 / 8.21	7 / 8.21	19 / 8.21	014 / 014	-	-	- KEYED LOCK, NON-MONTORED	- HS178 / PLANETARIUM STORAGE	2 / 10.01
180	3'-0"	7'-0"	H	SCWD	PSG	-	HM	PSG	-	2 / 8.21	- / -	7 / 8.21	11 / 8.21	19 / 8.21	014 / 014	-	-	- KEYED LOCK, NON-MONTORED	- HS180 / SCIENCE STORAGE	2 / 10.01
181A	4'-0"	7'-10"*	H	SCWD	PSG	-	HM	PSG	-	2 / 8.21	- / -	7 / 8.21	12 / 8.21	17 / 8.21	104 / 104	YES	60 MIN.	STC 50, CLOSER, PASSAGE DOOR * (7'-0" HIGH DOOR FOR ALT. #6)	- EXIT ROUTE	13 / 10.01
181B	6'-0"	7'-10"*	HI (SIM.)	SCWD	PSG	-	HM	PSG	-	2 / 8.21	- / -	7 / 8.21	12 / 8.21	17 / 8.21	117 / 117	YES	60 MIN.	STC 50, CLOSER, 4'-0" + 2'-0" LEAF * (7'-0" HIGH DOOR FOR ALT. #6)	- EXIT ROUTE	13 / 10.01
181C	3'-6"	7'-10"*	HP	SCWD	PSG	-	HM	PSG	-	2 / 8.21	- / -	7 / 8.21	7 / 8.21	19 / 8.21	031 / 031	-	-	KEYED LOCK, NON-MONTORED * (7'-0" HIGH DOOR FOR ALT. #6)	HS181C / TECH ROOM -	2 / 10.01
181D	3'-6"	7'-10"*	HP	SCWD	PSG	-	HM	PSG	-	2 / 8.21	- / -	7 / 8.21	7 / 8.21	19 / 8.21	031 / 031	-	-	KEYED LOCK, NON-MONTORED * (7'-0" HIGH DOOR FOR ALT. #6)	HS181D / STORAGE -	2 / 10.01
182	3'-0"	7'-0"	H	SCWD	PSG	-	ALUM	ANOD	-	5 / 8.21	- / -	5 / 8.21	4 / 8.40	- / -	033 / 033	-	-	STC 50 KEYED LOCK, NON-MONTORED	- HS182 / (NAME & TITLE)	3, 4 / 10.01
183	6'-0"	7'-0"	AP	ALUM	ANOD	-	ALUM	ANOD	-	1 / 8.11	- / -	10 / 8.11	10 / 8.11	4 / 8.11	042 / 007	YES	-	CLOSER CARD READER LOCK, PROGRAMMED	(SYMBOL OF ACCESSIBILITY) EXIT	12, 15 / 10.01
183A	4'-0"	7'-0"	H	SCWD	PSG	-	HM	PSG	-	2 / 8.21	- / -	6 / 8.21	7 / 8.21	19 / 8.21	059 / 032	YES	-	- CARD READER LOCK, PROGRAMMED	HS181 / PLANETARIUM EXIT ROUTE	2, 13 / 10.01
183B	4'-0"	7'-0"	H	SCWD	PSG	-	HM	PSG	-	2 / 8.21	- / -	6 / 8.21	7 / 8.21	19 / 8.21	059 / 032	YES	-	- CARD READER LOCK, PROGRAMMED	HS181 / PLANETARIUM EXIT ROUTE	2, 13 / 10.01
184	3'-0"	7'-0"	H	SCWD	PSG	-	ALUM	ANOD	-	5 / 8.21	- / -	5 / 8.40	4 / 8.40	- / -	043 / 033	-	-	STC 50 CARD READER LOCK, PROGRAMMED	HS184 / (NAME & TITLE) -	3, 4 / 10.01
186	3'-0"	7'-0"	H	SCWD	PSG	-	ALUM	ANOD	-	5 / 8.21	- / -	5 / 8.21	4 / 8.40	19 / 8.21	033 / 033	-	-	STC 50 KEYED LOCK, NON-MONTORED	- HS186 / WORK ROOM	2 / 10.01
186A	3'-0"	7'-0"	H	SCWD	PSG	-	ALUM	ANOD	-	5 / 8.21	- / -	5 / 8.40	4 / 8.40	19 / 8.21	033 / 033	-	-	STC 50 KEYED LOCK, NON-MONTORED	- HS186 / WORK ROOM	2 / 10.01
188	3'-0"	7'-0"	H	SCWD	PSG	-	ALUM	ANOD	-	5 / 8.21	- / -	5 / 8.21	4 / 8.40	- / -	043 / 033	-	-	STC 50 CARD READER LOCK, PROGRAMMED	HS188 / (NAME & TITLE) -	3, 4 / 10.01
190	3'-0"	7'-0"	H	SCWD	PSG	-	ALUM	ANOD	-	5 / 8.21	- / -	5 / 8.40	4 / 8.40	- / -	033 / 033	-	-	STC 50 KEYED LOCK, NON-MONTORED	- HS190 / (NAME & TITLE)	3, 4 / 10.01
192	3'-0"	7'-0"	H	SCWD	PSG	-	HM	PSG	-	2 / 8.21	- / -	2 / 8.21	6 / 8.21	19 / 8.21	106 / 106	-	45 MIN.	- KEYED LOCK, NON-MONTORED	HS192 / HEALTH STORAGE -	2 / 10.01
194	3'-0"	7'-0"	H	SCWD	PSG	-	ALUM	ANOD	-	5 / 8.21	- / -	5 / 8.40	4 / 8.40	- / -	033 / 033	-	-	STC 50 KEYED LOCK, NON-MONTORED	- HS194 / MEETING ROOM	2 / 10.01
194A	3'-0"	7'-0"	A	ALUM	ANOD	-	ALUM	ANOD	-	3 / 8.21	3 / 8.21	5 / 8.21	4 / 8.40	17 / 8.21	033 / 033	-	-	STC 50 KEYED LOCK, NON-MONTORED	HS194 / MEETING ROOM -	2 / 10.01
198	3'-0"	7'-0"	A	ALUM	ANOD	-	ALUM	ANOD	-	3 / 8.21	3 / 8.21	4 / 8.40	4 / 8.40	19 / 8.21	064 / 012	-	-	- CARD READER LOCK, PROGRAMMED	HS198 / ADMINISTRATION -	2 / 10.01

DOOR SCHEDULE

SECOND FLOOR - SOUTH WING

DOOR NO.	DIMENSION WIDTH	DIMENSION HEIGHT	DOOR TYPE	DOOR MTL	DOOR FINISH	DOOR COLOR	FRAME MTL	FRAME FINISH	FRAME COLOR	HEAD	TRANSOM	JAMB	JAMB	THRESHOLD	HDWR GROUP (SEE NOTE #10)	PANIC HDWR	DOOR ASSEMBLY RATING	REMARKS	SIGNAGE (ALSO SEE SIGNAGE PLANS SHEETS A-10.01 - A-10.06) PULL SIDE TEXT / PUSH SIDE TEXT	DETAIL
200	3'-0"	7'-0"	H	SCWD	PSG	-	HM	PSG	-	3 / 8.21	2 / 8.40	7 / 8.21	7 / 8.21	19 / 8.21	001 / 001	-	-	- KEYED LOCK, NON-MONITORED	- HS200 / (NAME & TITLE)	3, 4 / 10.01
201	6'-0"	7'-0"	KP	SCWD	PSG	-	HM	PSG	-	2 / 8.21	- / -	12 (SIM) / 8.21	12 (SIM) / 8.21	17 / 8.21	060 / 034	YES	60 MIN.	STC 51, CLOSER CARD READER LOCK, PROGRAMMED	HS201 / LECTURE HALL EXIT ROUTE	2, 13 / 10.01
201A	3'-0"	7'-0"	H	IHM	PSG	-	HM	PSG	-	1 / 8.12	- / -	2 / 8.12	2 / 8.12	3 / 8.12	083 / 035	YES	-	EXIT ONLY, CLOSER KEYED LOCK, MONITORED	EXIT ONLY (DET. 13/10.01 SIM.) EXIT ROUTE	12, 13 / 10.01
201B	2'-6"	7'-0"	H	SCWD	PSG	-	HM	PSG	-	2 / 8.21	- / -	12 (SIM) / 8.21	12 (SIM) / 8.21	- / -	005 / 005	-	-	- KEYED LOCK, NON-MONTORED	- -	- / -
201C	2'-6"	7'-0"	H	SCWD	PSG	-	HM	PSG	-	2 / 8.21	- / -	7 / 8.21	7 / 8.21	- / -	005 / 005	-	-	- KEYED LOCK, NON-MONTORED	- -	- / -
202	3'-0"	7'-0"	H	SCWD	PSG	-	HM	PSG	-	3 / 8.21	2 / 8.40	7 / 8.21	7 / 8.21	19 / 8.21	001 / 001	-	-	- KEYED LOCK, NON-MONTORED	- HS202 / (NAME & TITLE)	3, 4 / 10.01
203	6'-0"	7'-0"	AP	ALUM	ANOD	-	ALUM	ANOD	-	14 / 8.11	- / -	12 / 8.11	13 / 8.11	4 / 8.11	042 / 025	YES	-	CLOSER CARD READER LOCK, PROGRAMMED	- EXIT	12 / 10.01
204	3'-0"	7'-0"	H	SCWD	PSG	-	HM	PSG	-	3 / 8.21	2 / 8.40	7 / 8.21	7 / 8.21	19 / 8.21	001 / 001	-	-	- KEYED LOCK, NON-MONTORED	- HS204 / (NAME & TITLE)	3, 4 / 10.01
205	4'-0"	7'-0"	K	SCWD	PSG	-	HM	PSG	-	2 / 8.21	- / -	7 / 8.21	7 / 8.21	17 / 8.21	084 / 085	-	45 MIN.	STC 50 CARD READER LOCK, PROGRAMMED	HS205 / NURSING SKILLS LAB EXIT ROUTE	2, 13 / 10.01
206	3'-0"	7'-0"	H	SCWD	PSG	-	HM	PSG	-	3 / 8.21	2 / 8.40	7 / 8.21	7 / 8.21	19 / 8.21	001 / 001	-	-	- KEYED LOCK, NON-MONTORED	- HS206 / (NAME & TITLE)	3, 4 / 10.01
207	6'-0"	7'-0"	HP	SCWD	PSG	-	HM	PSG	-	2 / 8.21	- / -	7 / 8.21	7 / 8.21	- / -	029 / 029	-	45 MIN.	- KEYED LOCK, NON-MONTORED	- HS209A / NURSING SKILLS LAB STORAGE	2 / 10.01
208	3'-0"	7'-0"	H	SCWD	PSG	-	HM	PSG	-	3 / 8.21	2 / 8.40	7 / 8.21	7 / 8.21	19 / 8.21	001 / 001	-	-	- KEYED LOCK, NON-MONTORED	- HS208 / (NAME & TITLE)	3, 4 / 10.01
209B	3'-0"	7'-0"	H	SCWD	PSG	-	HM	PSG	-	2 / 8.21	- / -	7 / 8.21	7 / 8.21	- / -	105 / 105	-	45 MIN.	- KEYED LOCK, NON-MONTORED	- ~~HS209B / NURSING STORAGE~~	2 / 10.01
209C	3'-0"	7'-0"	K	SCWD	PSG	-	HM	PSG	-	2 / 8.21	- / -	7 / 8.21	11 / 8.21	- / -	049 / 061	-	-	- CARD READER LOCK, PROGRAMMED	HS207 / NURSING SKILLS LAB	2 / 10.01
210	3'-0"	7'-0"	H	SCWD	PSG	-	HM	PSG	-	3 / 8.21	2 / 8.40	7 / 8.21	7 / 8.21	19 / 8.21	001 / 001	-	-	- KEYED LOCK, NON-MONITORED	- HS210 / (NAME & TITLE)	3, 4 / 10.01
211	6'-0"	7'-0"	KP	SCWD	PSG	-	HM	PSG	-	2 / 8.21	- / -	7 / 8.21	13A / 8.21	17 / 8.21	045 / 009	YES	-	STC 50, EAST LEAF INACTIVE CARD READER LOCK, PROGRAMMED	HS211 / NURSING EXIT ROUTE	2, 13 / 10.01
211A	3'-0"	7'-0"	H	SCWD	PSG	-	HM	PSG	-	2 / 8.21	- / -	7 / 8.21	7 / 8.21	- / -	014 / 014	-	-	- KEYED LOCK, NON-MONTORED	- -	- / -
211B	3'-0"	7'-0"	H	SCWD	PSG	-	ALUM	ANOD	-	5 / 8.21	- / -	4 / 8.40	4 / 8.21	- / -	027 / 027	-	-	- KEYED LOCK, NON-MONTORED	- HS211B / (NAME & TITLE)	3, 4 / 10.01
211C	10'-0"	7'- 0"	M	ALUM	ANOD	-	ALUM	ANOD	-	6 / 8.22	- / -	1 / 8.22	2 / 8.22	11 / 8.22	-	-	-	TELESCOPING DOOR WITH (3) PANELS ALL BREAK OUT FOR EMERGENCY	- HS211D / CARDIAC/ICU SIMULATION LAB	2 / 10.01
211D	10'-0"	7'- 0"	M	ALUM	ANOD	-	ALUM	ANOD	-	6 / 8.22	- / -	2 SIM. / 8.22	1 SIM. / 8.22	11 / 8.22	-	-	-	TELESCOPING DOOR WITH (3) PANELS ALL BREAK OUT FOR EMERGENCY	- HS211E / PEDIATRIC SIMULATION LAB	2 / 10.01
211E	3'-0"	7'-0"	H	SCWD	PSG	-	HM	PSG	-	2 / 8.21	- / -	7 / 8.21	7 / 8.21	- / -	107 / 107	-	45 MIN.	- KEYED LOCK, NON-MONTORED	- HS211F / PREP STORAGE	2 / 10.01
211F	10'-0"	7'- 0"	M	ALUM	ANOD	-	ALUM	ANOD	-	6 / 8.22	- / -	1 / 8.22	2 / 8.22	11 / 8.22	-	-	-	TELESCOPING DOOR WITH (3) PANELS ALL BREAK OUT FOR EMERGENCY	- HS211A / OB SIMULATION LAB	2 / 10.01
211G	3'-0"	7'-0"	H	SCWD	PSG	-	HM	PSG	-	2 / 8.21	- / -	7 / 8.21	11 / 8.21	- / -	049 / 086	-	-	CLOSER CARD READER LOCK, PROGRAMMED	- HS209A / NURSING SKILLS LAB STORAGE	2 / 10.01
212	3'-0"	7'-0"	H	SCWD	PSG	-	HM	PSG	-	3 / 8.21	2 / 8.40	7 / 8.21	7 / 8.21	19 / 8.21	001 / 001	-	-	- KEYED LOCK, NON-MONITORED	- HS212 / (NAME & TITLE)	3, 4 / 10.01
213	3'-0"	7'-0"	A	ALUM	ANOD	-	ALUM	ANOD	-	5 / 8.40	4 / 8.40	4 / 8.40	10 / 8.21	17 / 8.21	108 / 037	-	-	STC 50 KEYED LOCK, MONITORED	HS213 / GROUP STUDY ROOM -	2 / 10.01
213A	3'-0"	7'-0"	A	ALUM	ANOD	-	ALUM	ANOD	-	5 / 8.40	4 / 8.40	4 / 8.40	10 / 8.21	17 / 8.21	013 / 013	-	-	STC 50 KEYED LOCK, NON-MONTORED	- HS213 / GROUP STUDY ROOM	2 / 10.01
214	3'-0"	7'-0"	H	SCWD	PSG	-	HM	PSG	-	- / -	2 / 8.40	7 / 8.21	7 / 8.21	19 / 8.21	001 / 001	-	-	- KEYED LOCK, NON-MONITORED	- HS214 / (NAME & TITLE)	3, 4 / 10.01
216	3'-0"	7'-0"	H	SCWD	PSG	-	HM	PSG	-	2 / 8.21	- / -	7 / .21	7 / 8.21	17 / 8.21	010 / 010	-	-	- KEYED LOCK, NON-MONITORED	- HS216 / JANITOR CLOSET	2 / 10.01
217	3'-0"	7'-0"	K	SCWD	PSG	-	HM	PSG	-	2 / 8.21	- / -	7 / 8.21	11 / 8.21	17 / 8.21	108 / 008	-	-	STC 50 KEYED LOCK, MONITORED	HS217 / CLASSROOM EXIT ROUTE	2, 13 / 10.01
217A	3'-0"	7'-0"	K	SCWD	PSG	-	HM	PSG	-	2 / 8.21	- / -	6 / 8.21	7 / 8.21	17 / 8.21	043 / 008	-	-	STC 50 CARD READER LOCK, PROGRAMMED	HS217 / CLASSROOM EXIT ROUTE	2, 13 / 10.01
217B	2'-6"	7'-0"	H	SCWD	PSG	-	HM	PSG	-	2 / 8.21	- / -	7 / 8.21	11 / 8.21	- / -	005 / 005	-	-	- KEYED LOCK, NON-MONTORED	- -	- / -
218	3'-0"	7'-0"	H	SCWD	PSG	-	HM	PSG	-	3 / 8.21	2 / 8.40	7 / 8.21	7 / 8.21	19 / 8.21	001 / 001	-	-	- KEYED LOCK, NON-MONITORED	- HS218 / (NAME & TITLE)	3, 4 / 10.01
219	3'-0"	7'-0"	H	SCWD	PSG	-	HM	PSG	-	2 / 8.21	- / -	7 / 8.21	12 / 8.21	16 / 8.21	013 / 013	-	-	STC 51, CLOSER KEYED LOCK, NON-MONITORED	- MEN (WALL & DOOR MOUNTED)	7, 9 / 10.01
220	3'-0"	7'-0"	H	SCWD	PSG	-	HM	PSG	-	3 / 8.21	2 / 8.40	7 / 8.21	7 / 8.21	19 / 8.21	001 / 001	-	-	- KEYED LOCK, NON-MONITORED	- HS220 / (NAME & TITLE)	3, 4 / 10.01
221	3'-0"	7'-0"	H	SCWD	PSG	-	HM	PSG	-	2 / 8.21	- / -	7 / 8.21	12 / 8.21	16 / 8.21	013 / 013	-	-	STC 51, CLOSER KEYED LOCK, NON-MONITORED	- WOMEN (WALL & DOOR MOUNTED)	6, 8 / 10.01
222	3'-0"	7'-0"	H	SCWD	PSG	-	HM	PSG	-	3 / 8.21	2 / 8.40	7 / 8.21	7 / 8.21	19 / 8.21	001 / 001	-	-	- KEYED LOCK, NON-MONITORED	- HS222 / (NAME & TITLE)	3, 4 / 10.01
223	4'-0"	7'-0"	L	SCWD	PSG	-	HM	PSG	-	2 / 8.21	- / -	7 / 8.21	11 / 8.21	17 / 8.21	099 / 017	-	-	STC 50 KEYED LOCK, MONITORED	HS223 / ANTHROPOLOGY LAB EXIT ROUTE	2, 13 / 10.01
223A	3'-0"	7'-0"	B	HM	PSG	-	HM	PSG	-	2 / 8.21	- / -	7 / 8.21	7 / 8.21	- / -	026 / 026	-	-	- KEYED LOCK, NON-MONTORED	ANTHROPOLOGY LAB HS223A / ANTHROPOLOGY PREP/STOR.	2 / 10.01
223B	3'-0"	7'-0"	K	SCWD	PSG	-	HM	PSG	-	2 / 8.21	- / -	6 / 8.21	7 / 8.21	17 / 8.21	043 / 008	-	-	STC 50 CARD READER LOCK, PROGRAMMED	HS223 / ANTHROPOLOGY LAB EXIT ROUTE	2, 13 / 10.01
224	3'-0"	7'-0"	H	SCWD	PSG	-	HM	PSG	-	2 / 8.21	- / -	7 / 8.21	7 / 8.21	17 / 8.21	038 / 014	-	-	- CARD READER LOCK, PROGRAMMED	- HS224 / IDF ROOM	2 / 10.01
226	3'-0"	7'-0"	H	SCWD	PSG	-	HM	PSG	-	- / -	2 / 8.40	7 / 8.21	7 / 8.21	19 / 8.21	001 / 001	-	-	- KEYED LOCK, NON-MONITORED	- HS226 / (NAME & TITLE)	3, 4 / 10.01
227	4'-0"	7'-0"	L	SCWD	PSG	-	HM	PSG	-	2 / 8.21	- / -	7 / 8.21	11 / 8.21	17 / 8.21	099 / 017	-	-	STC 50 KEYED LOCK, MONITORED	HS227 / GENERAL CHEMISTRY LAB EXIT ROUTE	2, 13 / 10.01
227A	3'-0"	7'-0"	B	HM	PSG	-	HM	PSG	-	2 / 8.21	- / -	7 / 8.21	7 / 8.21	- / -	114 / 114	-	-	- KEYED LOCK, NON-MONITORED	HS229 / CHEMISTRY INSTRUMENT ROOM HS227 / GENERAL CHEMISTRY LAB	2 / 10.01
227B	3'-0"	7'-0"	K	SCWD	PSG	-	HM	PSG	-	2 / 8.21	- / -	7 / 8.21	11 / 8.21	17 / 8.21	090 / 036	-	-	STC 50 CARD READER LOCK, PROGRAMMED	HS227 / GENERAL CHEMISTRY LAB EXIT ROUTE	2, 13 / 10.01

tBP architecture planning interiors management

tBP/Architecture
5455 Wilshire Boulevard, Suite 1200
Los Angeles, CA 90036-4242
ph: 323. 556. 3788 fx: 323. 556. 3799

LICENSED ARCHITECT JIM O. PAN NO. C28074 REN. 4-30-11 STATE OF CALIFORNIA

architect

consultant

IDENTIFICATION STAMP
DIV. OF THE STATE ARCHITECT
OFFICE OF REGULATION SERVICES
File No. 19-C11
Appl No. 03-112201
AC ____ FLS ____ SS ____
DATE ____

DSA Los Angeles Basin Regional Office
700 North Alameda Street, Suite 5-500
Los Angeles, California 90012
ph: 213/897-3995 fx: 213/897-3159/0726
agency

ANTELOPE VALLEY COLLEGE
HEALTH & SCIENCE BUILDING
ANTELOPE VALLEY COMMUNITY COLLEGE DISTRICT
3041 WEST AVENUE K
LANCASTER, CA 93536-5426

owner

tBP project number : 20641.00
file name: Dtl-0802.dwg
drawn by: checked by: -
date: JULY 30, 2009 - 100% CD

Rev:	date:	description:
1	11/16/09	ADDENDUM #1
2	2/26/10	ADDENDUM #2

THIS DRAWING AND THE DESIGNS, DEPICTIONS, IDEAS AND OTHER INFORMATION CONTAINED HEREIN CONSTITUTE UNPUBLISHED WORK OF tBP/ARCHITECTURE AND SHALL REMAIN THE PROPERTY OF tBP/ARCHITECTURE IN PERPETUITY. NO PART THEREOF SHALL BE REPRODUCED, DISCLOSED, DISTRIBUTED, SOLD, PUBLISHED OR OTHERWISE USED IN ANY WAY WITHOUT THE ADVANCED EXPRESS WRITTEN CONSENT OF tBP/ARCHITECTURE.

drawing title:
DOOR SCHEDULE

drawing no.:
8.02
drawing of

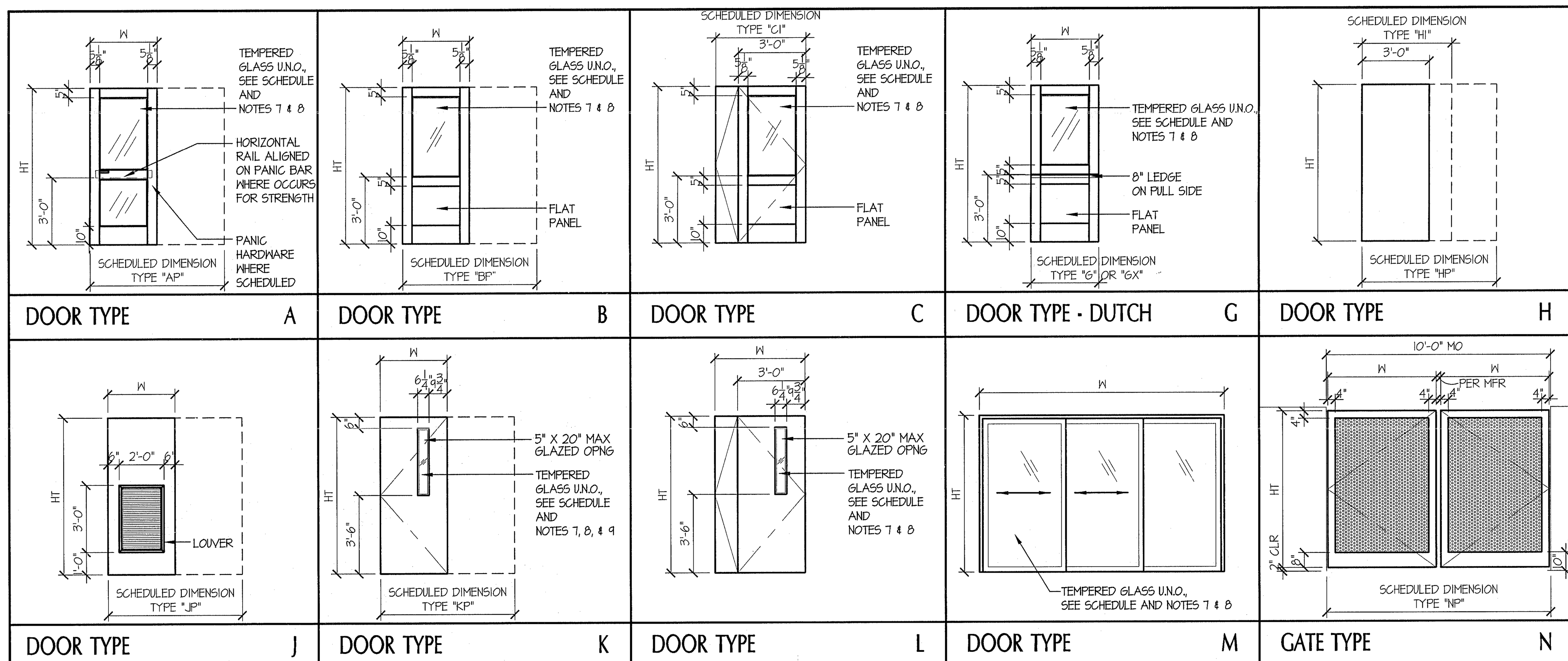

ABBREVIATIONS

AFP	ACCORDION TYPE PARTITION
ALUM	ALUMINUM
ANOD	ANODIZED COATING, CLEAR, FF
AS	ACID STAIN
ATFD	ACCORDION TYPE FIRE DOOR
CI	CONSISTS OF 3'-0" TYPE C DOOR + 1'-0" TYPE C DOOR
DEM PART	DEMOUNTABLE PARTITION
(E)	EXISTING
EP	EPOXY PAINT
FF	FACTORY FINISH
FFD	FOLDING FABRIC DOOR
FPP	FOLDING PANEL PARTITION
FPWD	FOLDING PANEL WOOD DOOR
GL	GLASS
HCN	HOLLOW CORE NATURAL FINISH
HCP	HOLLOW CORE PAINT FINISH
HI	CONSISTS OF 3'-0" TYPE H DOOR + 1'-0" TYPE H DOOR
HM	HOLLOW METAL
IHM	INSULATED HOLLOW METAL
HP	PAIR OF TYPE H DOOR
LAQ	LACQUER FINISH
MCN	MINERAL CORE NATURAL FINISH
MCP	MINERAL CORE PAINT FINISH
PE	PAINT EGGSHELL
PF	PAINT FLAT
PG	PAINT GLOSS
PH	EMERGENCY EGRESS HARDWARE
PS	PREFINISHED STEEL
PSG	PAINT SEMI-GLOSS
RM	REMOVABLE MULLION
S	SEAL
SCN	SOLID CORE NATURAL FINISH
SCP	SOLID CORE PAINT FINISH
SCPL	SOLID CORE PLASTIC LAMINATE
SCWD	SOLID CORE WOOD
SF	STAIN FINISH
SST	STAINLESS STEEL
STL	STEEL
SWD	SOLID WOOD
UG	UNGLAZED
VF	VARNISH
W	WAX

NOTES

1. DOORS SHALL BE 1-3/4" THICK, UNLESS NOTED OTHERWISE.
2. THE LETTER 'P' FOLLOWING THE 'DOOR TYPE' DESIGNATION IN THE DOOR SCHEDULE INDICATES PAIR OF DOORS. BOTH DOOR LEAVES ARE THE SAME SIZE, UNLESS NOTED OTHERWISE.
3. THE LETTER 'X' FOLLOWING THE 'DOOR TYPE' LETTER IN THE DOOR SCHEDULE INDICATES A FIXED DOOR. SCHEDULE DIMENSION INCLUDES FIXED DOOR, UNLESS NOTED OTHERWISE.
4. FIXED DOORS SHALL BE OF THE SAME MATERIAL, CONSTRUCTION, AND THICKNESS AS DOOR LEAF, AND SHALL BE PROVIDED BY THE SAME MANUFACTURER, UNLESS NOTED OTHERWISE.
5. LOUVERS IN EXTERIOR DOORS SHALL BE VANDAL-PROOF, SECURITY TYPE.
6. GLASS IN ALL FIRE RATED DOORS SHALL BE U.L. LISTED, 1/4" THICK, 45 MINUTE, CERAMIC GLASS, INSTALLED IN HOLLOW METAL FRAMES. GLASS LITE IN 60 MINUTE FIRE RATED ASSEMBLIES SHALL NOT EXCEED 100 SQUARE INCHES.
7. GLASS IN NON-RATED EXTERIOR DOORS SHALL BE CLEAR TEMPERED GLASS.
8. PROVIDE STAINLESS STEEL KICKPLATE BOTH SIDES OF ALL DOORS
9. GLASS IN FIRE-RATED DOORS SHALL BE 60 MINUTE RATED, TYP.
9. EXTERIOR DOOR REQUIREMENTS:

   ALL EXTERIOR DOORS IN BUILDINGS, INCLUDING, BUT NOT LIMITED TO DOORS OF TOILETS AND STORAGE ROOMS, SHALL CONFORM WITH THE REQUIREMENTS OF THE LATEST EDITION OF THE CALIFORNIA BUILDING CODE:

   - EXIT DOOR SHALL BE OPERABLE FROM THE INSIDE WITHOUT THE USE OF A KEY OR ANY SPECIAL KNOWLEDGE OR EFFORT.
   - HAND ACTIVATED DOOR OPENING HARDWARE SHALL BE CENTERED BETWEEN 30" AND 44" ABOVE FINISH FLOOR. PANIC HARDWARE SHALL BE 36" TO 44" ABOVE FINISH FLOOR.
   - DEAD BOLTS ARE NOT PERMITTED UNLESS OPERABLE WITH A SINGLE EFFORT LEVER TYPE HARDWARE.
   - ALL ROOMS SERVING AN OCCUPANCY LOAD OF 50 OR GREATER AND DOORS LOCATED ON THE DISCHARGE OF EXIT CORRIDORS ARE REQUIRED TO BE PROVIDED WITH PANIC HARDWARE (CBC 1007.3.10).
   - ALL FIRE DOOR LABELS SHALL COMPLY WITH 2007 C.B.C. 715.4.5
10. BID ALTERNATE #8, HARDWARE GROUPS: THERE ARE TWO HARDWARE GROUP NUMBERS, (01 / 02). THE FIRST NUMBER REPRESENTS THE BASE BID (DOORS WITH CARD READERS & ACCESS CONTROL). THE SECOND NUMBER REPRESENTS THE DEDUCTIVE ALTERNATE (DOORS WITHOUT CARD READERS, KEY LOCKS ONLY).

DOOR SCHEDULE

SECOND FLOOR - NORTH WING

DOOR NO.	WIDTH	HEIGHT	DOOR TYPE	DOOR MTL	DOOR FINISH	DOOR COLOR	FRAME MTL	FRAME FINISH	FRAME COLOR	HEAD	TRANSOM	JAMB	JAMB	THRESHOLD	HDWR GROUP (SEE NOTE #10)	PANIC HDWR	DOOR ASSEMBLY RATING	REMARKS	SIGNAGE (ALSO SEE SIGNAGE PLANS SHEETS A-10.01 - A-10.06) PULL SIDE TEXT / PUSH SIDE TEXT	DETAIL
228	3'-0"	7'-0"	H	SCWD	PSG	-	HM	PSG	-	- / -	2 / 8.40	7 / 8.21	7 / 8.21	19 / 8.21	001 / 001	-	-	- KEYED LOCK, NON-MONITORED	- HS228 / (NAME & TITLE)	3, 4 / 10.01
229	4'-0"	7'-0"	L	SCWD	PSG	-	HM	PSG	-	2 / 8.21	- / -	6 / 8.21	7 / 8.21	17 / 8.21	050 / 017	-	-	STC 50 CARD READER LOCK, PROGRAMMED	HS229 / CHEMISTRY INSTRUMENT ROOM -	2 / 10.01
229A	3'-0"	7'-0"	B	HM	PSG	-	HM	PSG	-	2 / 8.21	- / -	7 / 8.21	6 / 8.21	- / -	115 / 115	-	-	STC 50 KEYED LOCK, NON-MONITORED	HS231 / ORGANIC CHEMISTRY LAB HS229 / CHEMISTRY INSTRUMENT ROOM	2 / 10.01
229B	3'-0"	7'-0"	B	HM	PSG	-	HM	PSG	-	2 / 8.21	- / -	7 / 8.21	12 / 8.21	- / -	003 / 003	-	-	- KEYED LOCK, NON-MONITORED	- HS229A / (NAME & TITLE)	3, 4 / 10.01
229C	3'-0"	7'-0"	B	HM	PSG	-	HM	PSG	-	2 / 8.21	- / -	7 / 8.21	7 / 8.21	- / -	069 / 069	-	45 MIN.	- KEYED LOCK, NON-MONITORED	HS235A / CHEMISTRY PREP/STORAGE HS229 / CHEMISTRY INSTRUMENT ROOM	2 / 10.01
230	3'-0"	7'-0"	H	SCWD	PSG	-	HM	PSG	-	- / -	2 / 8.40	7 / 8.21	7 / 8.21	19 / 8.21	001 / 001	-	-	- KEYED LOCK, NON-MONITORED	- HS230 / (NAME & TITLE)	3, 4 / 10.01
231	4'-0"	7'-0"	L	SCWD	PSG	-	HM	PSG	-	2 / 8.21	- / -	7 / 8.21	11 / 8.21	17 / 8.21	099 / 017	-	-	STC 50 KEYED LOCK, MONITORED	HS231 / ORGANIC CHEMISTRY LAB EXIT ROUTE	2, 13 / 10.01
231A	3'-0"	7'-0"	K	SCWD	PSG	-	HM	PSG	-	2 / 8.21	- / -	7 / 8.21	11 / 8.21	17 / 8.21	043 / 008	-	-	STC 50 CARD READER LOCK, PROGRAMMED	HS231 / ORGANIC CHEMISTRY LAB EXIT ROUTE	2, 13 / 10.01
231B	3'-0"	7'-0"	B	HM	PSG	-	HM	PSG	-	2 / 8.21	- / -	7 / 8.21	7 / 8.21	- / -	107 / 107	-	45 MIN.	- KEYED LOCK, NON-MONITORED	HS231 / ORGANIC CHEMISTRY LAB HS235A / CHEMISTRY PREP/STORAGE	2 / 10.01
232	3'-0"	7'-0"	H	SCWD	PSG	-	HM	PSG	-	3 / 8.21	2 / 8.40	7 / 8.21	7 / 8.21	19 / 8.21	001 / 001	-	-	- KEYED LOCK, NON-MONITORED	- HS232 / (NAME & TITLE)	3, 4 / 10.01
234	3'-0"	7'-0"	H	SCWD	PSG	-	HM	PSG	-	3 / 8.21	2 / 8.40	7 / 8.21	7 / 8.21	19 / 8.21	001 / 001	-	-	- KEYED LOCK, NON-MONITORED	- HS234 / (NAME & TITLE)	3, 4 / 10.01
235	4'-0"	7'-0"	L	SCWD	PSG	-	HM	PSG	-	2 / 8.21	- / -	7 / 8.21	12 / 8.21	- / -	087 / 073	-	-	- CARD READER LOCK, PROGRAMMED	HS235 / ELEVATOR -	2 / 10.01
235A	4'-0"	7'-0"	L	SCWD	PSG	-	HM	PSG	-	2 / 8.21	- / -	6 / 8.21	7 / 8.21	17 / 8.21	068 / 068	-	45 MIN.	STC 50 KEYED LOCK, NON-MONITORED	HS235A / CHEMISTRY PREP/STORAGE EXIT ROUTE	2, 13 / 10.01
235B	3'-0"	7'-0"	H	SCWD	PSG	-	HM	PSG	-	2 / 8.21	- / -	7 / 8.21	12 / 8.21	- / -	069 / 069	-	60 MIN.	CLOSER KEYED LOCK, NON-MONITORED	- HS235B / FLAMMABLE CHEM. STORAGE	2 / 10.01
235C	3'-0"	7'-0"	H	SCWD	PSG	-	HM	PSG	-	2 / 8.21	- / -	7 / 8.21	12 / 8.21	- / -	069 / 069	-	60 MIN.	CLOSER KEYED LOCK, NON-MONITORED	- HS235C / FLAMMABLE CHEM. STORAGE	2 / 10.01
235D	3'-0"	7'-0"	H	SCWD	PSG	-	HM	PSG	-	2 / 8.21	- / -	7 / 8.21	12 / 8.21	- / -	069 / 069	-	60 MIN.	CLOSER KEYED LOCK, NON-MONITORED	- HS235D / FLAMMABLE CHEM. STORAGE	2 / 10.01
235E	3'-0"	7'-0"	H	SCWD	PSG	-	HM	PSG	-	2 / 8.21	- / -	7 / 8.21	7 / 8.21	- / -	026 / 026 (rev. 2)	-	-	- KEYED LOCK, NON-MONITORED	- HS235E / CHEMISTRY STORAGE	2 / 10.01
236	3'-0"	7'-0"	H	SCWD	PSG	-	HM	PSG	-	3 / 8.21	2 / 8.40	7 / 8.21	7 / 8.21	19 / 8.21	001 / 001	-	-	- KEYED LOCK, NON-MONITORED	- HS236 / (NAME & TITLE)	3, 4 / 10.01
237	4'-0"	7'-0"	L	SCWD	PSG	-	HM	PSG	-	2 / 8.21	- / -	7 / 8.21	11 / 8.21	17 / 8.21	099 / 017	-	-	STC 50 KEYED LOCK, MONITORED	HS237 / GENERAL CHEMISTRY LAB EXIT ROUTE	2, 13 / 10.01
237A	3'-0"	7'-0"	K	SCWD	PSG	-	HM	PSG	-	2 / 8.21	- / -	7 / 8.21	11 / 8.21	17 / 8.21	043 / 008	-	-	STC 50 CARD READER LOCK, PROGRAMMED	HS237 / GENERAL CHEMISTRY LAB EXIT ROUTE	2, 13 / 10.01
237B	3'-0"	7'-0"	B	HM	PSG	-	HM	PSG	-	2 / 8.21	- / -	7 / 8.21	12 / 8.21	- / -	109 / 109	-	45 MIN.	- KEYED LOCK, NON-MONITORED	HS237 / GENERAL CHEMISTRY LAB HS235A / CHEMISTRY PREP/STORAGE	2 / 10.01
238	3'-0"	7'-0"	H	SCWD	PSG	-	HM	PSG	-	3 / 8.21	2 / 8.40	7 / 8.21	7 / 8.21	19 / 8.21	001 / 001	-	-	- KEYED LOCK, NON-MONITORED	- HS238 / (NAME & TITLE)	3, 4 / 10.01
239	4'-0"	7'-0"	L	SCWD	PSG	-	HM	PSG	-	2 / 8.21	- / -	7 / 8.21	11 / 8.21	17 / 8.21	099 / 017	-	-	STC 50 KEYED LOCK, MONITORED	HS239 / PHYSICAL SCIENCE LAB EXIT ROUTE	2, 13 / 10.01
239A	3'-0"	7'-0"	K	SCWD	PSG	-	HM	PSG	-	2 / OSG	- / -	7 / PSG	11 / PSG	17 / 8.21	043 / 008	-	-	STC 50 CARD READER LOCK, PROGRAMMED	HS239 / PHYSICAL SCIENCE LAB EXIT ROUTE	2, 13 / 10.01
239B	3'-0"	7'-0"	K	SCWD	PSG	-	HM	PSG	-	2 / 8.21	- / -	7 / 8.21	12 / 8.21	17 / 8.21	109 / 109	-	-	STC 50 KEYED LOCK, NON-MONITORED	HS239 / PHYSICAL SCIENCE LAB HS237 / GENERAL CHEMISTRY LAB	2 / 10.01
240	3'-0"	7'-0"	H	SCWD	PSG	-	HM	PSG	-	3 / 8.21	2 / 8.40	7 / 8.21	7 / 8.21	19 / 8.21	001 / 001	-	-	- KEYED LOCK, NON-MONITORED	- HS240 / (NAME & TITLE)	3, 4 / 10.01
241	3'-0"	7'-0"	H	SCWD	PSG	-	HM	PSG	-	2 / 8.21	- / -	7 / 8.21	12 / 8.21	17 / 8.21	066 / 071	YES	60 MIN	CLOSER PASSAGE DOOR	- EXIT STAIR	14 / 10.01
242	3'-0"	7'-0"	H	SCWD	PSG	-	HM	PSG	-	- / -	2 / 8.40	7 / 8.21	7 / 8.21	19 / 8.21	001 / 001	-	-	- KEYED LOCK, NON-MONITORED	- HS242 / (NAME & TITLE)	3, 4 / 10.01
243	4'-0"	7'-0"	L	SCWD	PSG	-	HM	PSG	-	2 / 8.21	- / -	6 / 8.21	7 / 8.21	17 / 8.21	088 / 068	-	45 MIN.	STC 50 CARD READER LOCK, PROGRAMMED	HS243 / PHYSICS/PHYS. SCI. PREP/STOR. EXIT ROUTE	2, 13 / 10.01
243A	3'-0"	7'-0"	B	HM	PSG	-	HM	PSG	-	2 / 8.21	- / -	7 / 8.21	7 / 8.21	- / -	070 / 070	-	-	- KEYED LOCK, NON-MONITORED	HS243A / (NAME & TITLE) -	3, 4 / 10.01
243B	3'-0"	7'-0"	K	SCWD	PSG	-	HM	PSG	-	2 / 8.21	- / -	7 / 8.21	7 / 8.21	- / -	109 / 109	-	45 MIN.	- KEYED LOCK, NON-MONITORED	HS243 / PHYSICS/PHYS. SCI. PREP/STOR. HS251 / PHYSICS LAB	2 / 10.01
243C	3'-0"	7'-0"	H	SCWD	PSG	-	HM	PSG	-	2 / 8.21	- / -	7 / 8.21	11 / 8.21	19 / 8.21	014 / 014	-	-	- KEYED LOCK, NON-MONITORED	- HS243B / ELECTRICAL ROOM	2 / 10.01
243D	3'-0"	7'-0"	B	HM	PSG	-	HM	PSG	-	2 / 8.21	- / -	7 / 8.21	7 / 8.21	- / -	028 / 028	-	-	90 DEGREE INHIBITOR KEYED LOCK, NON-MONITORED	HS239 / PHYSICAL SCIENCE LAB HS243 / PHYSICS/PHYS. SCI. PREP/STOR.	2 / 10.01
246	3'-0"	7'-0"	H	SCWD	PSG	-	HM	PSG	-	- / -	2 / 8.40	7 / 8.21	7 / 8.21	19 / 8.21	001 / 001	-	-	- KEYED LOCK, NON-MONITORED	- HS246 / (NAME & TITLE)	3, 4 / 10.01
247	3'-0"	7'-0"	H	SCWD	PSG	-	HM	PSG	-	2 / 8.21	- / -	6 / 8.21	7 / 8.21	16 / 8.21	110 / 013	-	-	STC 56, CLOSER KEYED LOCK, NON-MONITORED (rev. 2)	- MEN (WALL & DOOR MOUNTED)	7, 9 / 10.01
248	3'-0"	7'-0"	H	SCWD	PSG	-	HM	PSG	-	3 / 8.21	2 / 8.40	7 / 8.21	7 / 8.21	19 / 8.21	001 / 001	-	-	- KEYED LOCK, NON-MONITORED	- HS248 / (NAME & TITLE)	3, 4 / 10.01
249	3'-0"	7'-0"	H	SCWD	PSG	-	HM	PSG	-	2 / 8.21	- / -	6 / 8.21	7 / 8.21	16 / 8.21	110 / 013	-	-	STC 56, CLOSER KEYED LOCK, NON-MONITORED	- WOMEN (WALL & DOOR MOUNTED)	6, 8 / 10.01
250	3'-0"	7'-0"	H	SCWD	PSG	-	HM	PSG	-	3 / 8.21	2 / 8.40	7 / 8.21	7 / 8.21	19 / 8.21	001 / 001	-	-	- KEYED LOCK, NON-MONITORED	- HS250 / (NAME & TITLE)	3, 4 / 10.01
251	4'-0"	7'-0"	L	SCWD	PSG	-	HM	PSG	-	2 / 8.21	- / -	7 / 8.21	11 / 8.21	17 / 8.21	099 / 017	-	-	STC 50 KEYED LOCK, MONITORED	HS251 / PHYSICS LAB EXIT ROUTE	2, 13 / 10.01
251A	3'-0"	7'-0"	K	SCWD	PSG	-	HM	PSG	-	2 / 8.21	- / -	7 / 8.21	11 / 8.21	17 / 8.21	043 / 008	-	-	STC 50 CARD READER LOCK, PROGRAMMED	HS251 / PHYSICS LAB EXIT ROUTE	2, 13 / 10.01
252	3'-0"	7'-0"	H	SCWD	PSG	-	HM	PSG	-	3 / 8.21	2 / 8.40	7 / 8.21	7 / 8.21	19 / 8.21	001 / 001	-	-	- KEYED LOCK, NON-MONITORED	- HS252 / (NAME & TITLE)	3, 4 / 10.01
253	3'-0"	7'-0"	K	SCWD	PSG	-	HM	PSG	-	2 / 8.21	- / -	7 / 8.21	11 / 8.21	17 / 8.21	08 / 008	-	-	STC 50 KEYED LOCK, MONITORED	HS 253 / GEOGRAPHY/GIS LAB EXIT ROUTE	2, 13 / 10.01
253A	3'-0"	7'-0"	K	SCWD	PSG	-	HM	PSG	-	2 / 8.21	- / -	7 / 8.21	11 / 8.21	17 / 8.21	043 / 008	-	-	STC 50 CARD READER LOCK, PROGRAMMED	HS 253 / GEOGRAPHY/GIS LAB EXIT ROUTE	2, 13 / 10.01
253B	4'-0"	7'-0"	L	SCWD	PSG	-	HM	PSG	-	2 / 8.21	- / -	7 / 8.21	7 / 8.21	19 / 8.21	072 / 072	-	45 MIN.	- KEYED LOCK, NON-MONITORED	HS253 / GEOGRAPHY/GIS LAB HS251A / GEO. STOR./GIS PLOTTER	2 / 10.01
254	3'-0"	7'-0"	H	SCWD	PSG	-	HM	PSG	-	3 / 8.21	2 / 8.40	7 / 8.21	7 / 8.21	19 / 8.21	001 / 001	-	-	- KEYED LOCK, NON-MONITORED	- HS254 / (NAME & TITLE)	3, 4 / 10.01
256	3'-0"	7'-0"	H	SCWD	PSG	-	HM	PSG	-	3 / 8.21	2 / 8.40	7 / 8.21	7 / 8.21	19 / 8.21	001 / 001	-	-	- KEYED LOCK, NON-MONITORED	- HS256 / (NAME & TITLE)	3, 4 / 10.01
257	4'-0"	7'-0"	L	SCWD	PSG	-	HM	PSG	-	2 / PSG	- / -	11 / 8.21	12 / 8.21	17 / 8.21	111 / 068	-	45 MIN.	STC 50 KEYED LOCK, MONITORED	HS257 / GEOLOGY PREP/STORAGE -	2 / 10.01
257A	4'-0"	7'-0"	L	SCWD	PSG	-	HM	PSG	-	2 / 8.21	- / -	7 / 8.21	7 / 8.21	19 / 8.21	073 / 073	-	-	- KEYED LOCK, NON-MONITORED	HS257A / GEO. STOR./GIS PLOTTER HS257 / GEOLOGY PREP/STORAGE	2 / 10.01
258	3'-0"	7'-0"	H	SCWD	PSG	-	HM	PSG	-	3 / 8.21	2 / 8.40	7 / 8.21	7 / 8.21	19 / 8.21	001 / 001	-	-	- KEYED LOCK, NON-MONITORED	- HS258 / (NAME & TITLE)	3, 4 / 10.01
259	4'-0"	7'-0"	L	SCWD	PSG	-	HM	PSG	-	2 / 8.21	- / -	11 / 8.21	12 / 8.21	17 / 8.21	099 / 017	-	-	STC 50 KEYED LOCK, MONITORED	HS259 / GEOLOGY LAB EXIT ROUTE	2, 13 / 10.01
259A	3'-0"	7'-0"	K	SCWD	PSG	-	HM	PSG	-	2 / 8.21	- / -	7 / 8.21	7 / 8.21	17 / 8.21	043 / 008	-	-	STC 50 CARD READER LOCK, PROGRAMMED	HS259 / GEOLOGY LAB EXIT ROUTE	2, 13 / 10.01
259B	3'-0"	7'-0"	G	HM	PSG	-	HM	PSG	-	2 / 8.21	- / -	7 / 8.21	7 / 8.21	- / -	112 / 112	-	-	- KEYED LOCK, NON-MONITORED	HS259 / GEOLOGY LAB HS257 / GEOLOGY PREP/STORAGE	2 / 10.01

DOOR SCHEDULE

DOOR NO.	WIDTH	HEIGHT	DOOR TYPE	DOOR MTL	DOOR FINISH	DOOR COLOR	FRAME MTL	FRAME FINISH	FRAME COLOR	HEAD	TRANSOM	JAMB	JAMB	THRESHOLD	HDWR GROUP (SEE NOTE #10)	PANIC HDWR	DOOR ASSEMBLY RATING	REMARKS	SIGNAGE (ALSO SEE SIGNAGE PLANS SHEETS A-10.01 - A-10.06) PULL SIDE TEXT / PUSH SIDE TEXT	DETAIL
SECOND FLOOR - EAST WING																				
260	3'-0"	7'-0"	H	SCWD	PSG	-	HM	PSG	-	3 / 8.21	2 / 8.40	7 / 8.21	7 / 8.21	19 / 8.21	001 / 001	-	-	- KEYED LOCK, NON-MONITORED	- HS260 / (NAME & TITLE)	3, 4 / 10.01
261	3'-0"	7'-0"	K	SCWD	PSG	-	HM	PSG	-	2 / 8.21	- / -	6 / 8.21	7 / 8.21	17 / 8.21	039 / 002	YES	-	STC 50 CARD READER LOCK, PROGRAMMED	HS261 / CLASSROOM EXIT ROUTE	2, 13 / 10.01
261A	3'-0"	7'-0"	K	SCWD	PSG	-	HM	PSG	-	2 / 8.21	- / -	7 / 8.21	7 / 8.21	17 / 8.21	108 / 002	YES	-	STC 50 KEYED LOCK, MONITORED	HS261 / CLASSROOM EXIT ROUTE	2, 13 / 10.01
261B	5'-0"	7'-0"	HP	SCWD	PSG	-	HM	PSG	-	2 / 8.21	- / -	6 / 8.21	7 / 8.21	- / -	058 / 058	-	-	- KEYED LOCK, NON-MONITORED	- -	- / -
262	3'-0"	7'-0"	H	SCWD	PSG	-	HM	PSG	-	3 / 8.21	2 / 8.40	7 / 8.21	7 / 8.21	19 / 8.21	001 / 001	-	-	- KEYED LOCK, NON-MONITORED	- HS262 / (NAME & TITLE)	3, 4 / 10.01
263	6'-0"	7'-0"	AP	ALUM	ANOD	-	ALUM	ANOD	-	1 / 8.11	5 / 8.11	10 / 8.11	10 / 8.11	4 / 8.11	042 / 007	YES	-	CLOSER CARD READER LOCK, PROGRAMMED	- EXIT ROUTE	12 / 10.01
264	3'-0"	7'-0"	H	SCWD	PSG	-	HM	PSG	-	3 / 8.21	2 / 8.40	7 / 8.21	7 / 8.21	19 / 8.21	001 / 001	-	-	- KEYED LOCK, NON-MONITORED	- HS264 / (NAME & TITLE)	3, 4 / 10.01
265	3'-0"	7'-0"	H	SCWD	PSG	-	HM	PSG	-	2 / 8.21	- / -	7 / 8.21	7 / 8.21	17 / 8.21	065 / 069	-	45 MIN.	CLOSER CARD READER LOCK, PROGRAMMED	- -	- / -
266	3'-0"	7'-0"	H	SCWD	PSG	-	HM	PSG	-	3 / 8.21	2 / 8.40	7 / 8.21	7 / 8.21	19 / 8.21	001 / 001	-	-	- KEYED LOCK, NON-MONITORED	- HS266 / (NAME & TITLE)	3, 4 / 10.01
267	3'-0"	7'-0"	H	IHM	PSG	-	ALUM	ANOD	-	1 / 8.11	18 / 8.11	10 / 8.11	10 / 8.11	4 / 8.11	067 / 074	-	-	STC 50, CLOSER CARD READER LOCK, PROGRAMMED	- HS267 / (NAME & TITLE)	3, 4 / 10.01
267A	3'-0"	7'-0"	H	SCWD	PSG	-	HM	PSG	-	2 / 8.21	- / -	7 / 8.21	7 / 8.21	19 / 8.21	065 / 075	-	45 MIN.	- CARD READER LOCK, PROGRAMMED	- HS267A / ASTRONOMY STORAGE	2 / 10.01
267B	3'-0"	7'-0"	H	SCWD	PSG	-	HM	PSG	-	2 / 8.21	- / -	7 / 8.21	12 / 8.21	17 / 8.21	033 / 033	-	-	STC 50 KEYED LOCK, MONITORED	- -	- / -
270	3'-0"	7'-0"	H	SCWD	PSG	-	HM	PSG	-	2 / 8.21	- / -	7 / 8.21	7 / 8.21	19 / 8.21	101 / 010	-	-	- CARD READER LOCK, PROGRAMMED	- HS270 / IDF ROOM	2 / 10.01
270A	3'-0"	7'-0"	H	SCWD	PSG	-	HM	PSG	-	2 / 8.21	- / -	7 / 8.21	7 / 8.21	19 / 8.21	038 / 010	-	-	- KEYED LOCK, NON-MONITORED	- HS270A / STORAGE	2 / 10.01
272	3'-0"	7'-0"	A	ALUM	ANOD	-	ALUM	ANOD	-	3 / 8.21	3 / 8.21	4 / 8.40	12 / 8.21	19 / 8.21	064 / 076	-	-	- CARD READER LOCK, PROGRAMMED	HS272 / OPEN COMPUTER LAB EXIT ROUTE	2, 13 / 10.01
276	3'-0"	7'-0"	A	ALUM	ANOD	-	ALUM	ANOD	-	3 / 8.21	3 / 8.21	4 / 8.40	12 / 8.21	19 / 8.21	064 / 076	-	-	- CARD READER LOCK, PROGRAMMED	HS276 / TUTORIAL COMPUTER LAB EXIT ROUTE	2, 13 / 10.01
278	3'-0"	7'-0"	H	SCWD	PSG	-	ALUM	ANOD	-	5 / 8.21	- / -	10 / 8.21	4 / 8.40	17 / 8.21	048 / 089	-	-	STC 50 CARD READER LOCK, PROGRAMMED	- HS278 / FACULTY TUTORIAL LAB	2 / 10.01
280	3'-0"	7'-0"	G	HM	PSG	-	HM	PSG	-	2 / 8.21	- / -	2 / 8.21	1 / 8.21	19 / 8.21	057 / 061	-	-	- KEYED LOCK, MONITORED	- HS280 / WORKROOM	2 / 10.01
280A	3'-0"	7'-0"	G	HM	PSG	-	HM	PSG	-	2 / 8.21	- / -	1 / 8.21	2 / 8.21	19 / 8.21	057 / 061	-	-	- KEYED LOCK, MONITORED	- HS280 / WORKROOM	2 / 10.01
282	3'-0"	7'-0"	H	SCWD	PSG	-	ALUM	ANOD	-	5 / 8.21	- / -	4 / 8.40	5 / 8.22	17 / 8.21	033 / 033	-	-	STC 50 KEYED LOCK, NON-MONITORED	- HS282 / (NAME & TITLE)	2 / 10.01
282A	3'-0"	7'-0"	H	SCWD	PSG	-	HM	PSG	-	2 / 8.21	- / -	7 / 8.21	12 / 8.21	17 / 8.21	033 / 033	-	-	STC 50 KEYED LOCK, NON-MONITORED	- HS282 / (NAME & TITLE)	2 / 10.01
THIRD FLOOR																				
300	3'-0"	7'-0"	H	IHM	PSG	-	ALUM	ANOD	-	11 / 8.12	- / -	12 / 8.12	12 / 8.12	13 / 8.12	080 / 080	-	-	CLOSER KEYED LOCK, MONITORED	- -	- / -
301	3'-0"	7'-0"	H	IHM	PSG	-	HM	PSG	-	8 / 8.12	- / -	9 / 8.12	9 / 8.12	10 / 8.12	080 / 080	-	-	CLOSER KEYED LOCK, MONITORED	- -	- / -
SITE																				
001	8'-0"	8'-0"	NP	STL	PSG	-	STL	PSG	-	- / -	- / -	8 / 2.01	8 / 2.01	- / -	077 / 077	-	-	- KEYED LOCK, NON-MONITORED	- -	- / -
002	8'-0"	8'-0"	NP	STL	PSG	-	STL	PSG	-	- / -	- / -	8 / 2.01	8 / 2.01	- / -	077 / 077	-	-	- KEYED LOCK, NON-MONITORED	- -	- / -
003	8'-0"	8'-0"	NP	STL	PSG	-	STL	PSG	-	- / -	- / -	8 / 2.01	8 / 2.01	- / -	077 / 077	-	-	- KEYED LOCK, NON-MONITORED	- -	- / -
004	6'-0"	7'-0"	JP	HM	PSG	-	HM	PSG	-	(E) / -	- / -	(E) / -	(E) / -	(E) / -	078 / 078	-	-	(N) DOOR IN (E) HM FRAME @ (E) BOILER ROOM KEYED LOCK, NON-MONITORED	- -	- / -
005	3'-6"	7'-0"	-	-	-	-	-	-	-	- / -	- / -	- / -	- / -	4 / 8.11	079 / 079	-	-	SEE GREENHOUSE CUTSHEET KEYED LOCK, NON-MONITORED	HS001 / GREENHOUSE -	2 / 10.01

tBP
architecture planning interiors management
tBP/Architecture
5455 Wilshire Boulevard, Suite 1200
Los Angeles, CA 90036-4242
ph: 323. 556. 3788 fx: 323. 556. 3799
LICENSED ARCHITECT JIM C. PAN, AIA NO. C26074 RENE 4-30-11 STATE OF CALIFORNIA
architect

consultant

IDENTIFICATION STAMP
DIV. OF THE STATE ARCHITECT
OFFICE OF REGULATION SERVICES
File No. 19-C11
Appl No. 03-112201
AC ______ FLS ______ SS ______
DATE ______

DSA Los Angeles Basin Regional Office
700 North Alameda Street, Suite 5-500
Los Angeles, California 90012
ph: 213/897-3995 fx: 213/897-3159/0726
agency

ANTELOPE VALLEY COLLEGE HEALTH & SCIENCE BUILDING

ANTELOPE VALLEY COMMUNITY COLLEGE DISTRICT
3041 WEST AVENUE K
LANCASTER, CA 93536-5426
owner

tBP project number : 20641.00
file name: Dtl-0803.dwg
drawn by: checked by: -
date: JULY 30, 2009 - 100% CD

Rev:	date:	description:
2	2/26/10	ADDENDUM #2

THIS DRAWING AND THE DESIGNS, DEPICTIONS, IDEAS AND OTHER INFORMATION CONTAINED HEREIN CONSTITUTE UNPUBLISHED WORK OF tBP/ARCHITECTURE AND SHALL REMAIN THE PROPERTY OF tBP/ARCHITECTURE IN PERPETUITY. NO PART THEREOF SHALL BE REPRODUCED, DISCLOSED, DISTRIBUTED, SOLD, PUBLISHED OR OTHERWISE USED IN ANY WAY WITHOUT THE ADVANCED EXPRESS WRITTEN CONSENT OF tBP/ARCHITECTURE.

drawing title:
DOOR SCHEDULE

drawing no.:
8.03
drawing of

GENERAL NOTES

1. PROVIDE & IDENTIFY AS TEMPERED GLASS, PER CBC SECTION 2406. SEE SCHEDULE OF GLASS TYPES, FOR EXACT LOCATIONS.

SCHEDULE OF GLASS TYPES

TYPE	DESCRIPTION
	NOTE: SEE COLOR SCHEDULE FOR SPECIFICS.
GL-1	CLEAR FLOAT GLASS, TEMPERED
GL-8	CLEAR FLOAT GLASS
GL-9	OPAQUE GLASS
GL-10	CLEAR LAMINATED GLASS
SPF-2	LUMICOR ARCHITECTURAL RESIN PANEL

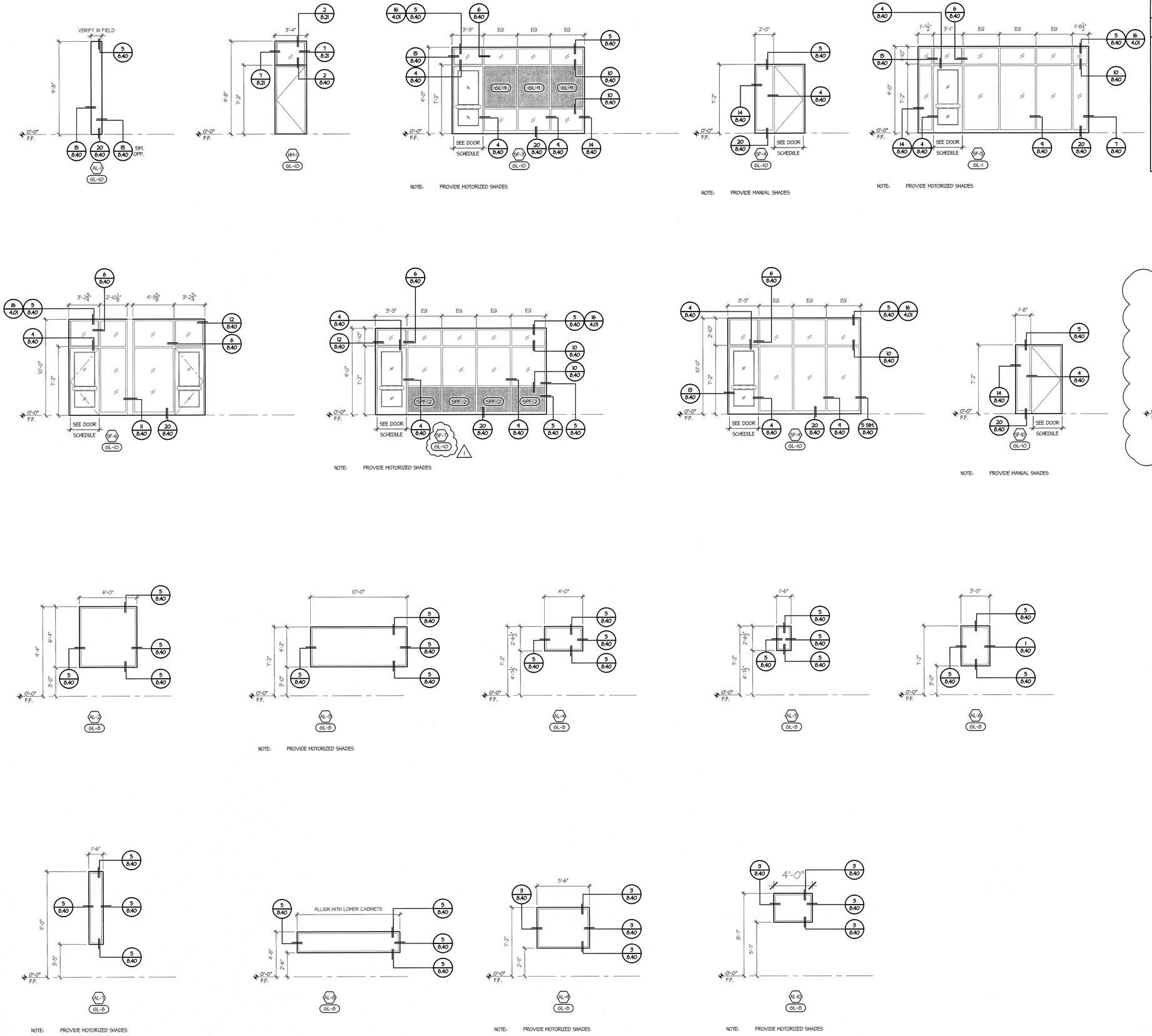

tBP
architecture
planning
interiors
management

tBP/Architecture
5455 Wilshire Boulevard, Suite 1200
Los Angeles, CA 90036-4242
ph: 323. 556. 3788 fx: 323. 556. 3799

LICENSED ARCHITECT
JOEL CHAY
STATE OF CALIFORNIA

architect

consultant

IDENTIFICATION STAMP
DIV. OF THE STATE ARCHITECT
OFFICE OF REGULATION SERVICES
File No. 19-C11
Appl No. 03-112201
AC ____ FLS ____ SS ____
DATE ____

DSA Los Angeles Basin Regional Office
700 North Alameda Street, Suite 5-500
Los Angeles, California 90012
ph: 213/897-3995 fx: 213/897-3159/0726

agency

ANTELOPE VALLEY COLLEGE HEALTH & SCIENCE BUILDING

ANTELOPE VALLEY COMMUNITY COLLEGE DISTRICT
3041 WEST AVENUE K
LANCASTER, CA 93536-5426

owner

tBP project number : 20641.00
file name: D11-0825.Dwg
drawn by: BDV checked by: ?
date: JULY 30, 2009 - 100% CD

Rev:	date:	description:
1	11/16/09	ADDENDUM #1
2	2/26/10	ADDENDUM #2

THIS DRAWING AND THE DESIGNS, DEPICTIONS, IDEAS AND OTHER INFORMATION CONTAINED HEREIN CONSTITUTE UNPUBLISHED WORK OF tBP/ARCHITECTURE AND SHALL REMAIN THE PROPERTY OF tBP/ARCHITECTURE IN PERPETUITY. NO PART THEREOF SHALL BE REPRODUCED, DISCLOSED, DISTRIBUTED, SOLD, PUBLISHED OR OTHERWISE USED IN ANY WAY WITHOUT THE ADVANCED EXPRESS WRITTEN CONSENT OF tBP/ARCHITECTURE.

drawing title:
WINDOW SCHEDULE

drawing no.:
8.25
drawing of

MATERIALS & COLOR SCHEDULE

SPECIFICATION SECTION	MFR / PRODUCT	LOCATION	DESIGNATION	COLOR	FINISH / MATERIAL	REMARKS
03335 COLORED CONCRETE PAVING	LITHOCRETE	EXTERIOR BRIDGE / DECK & STAIRS	CONC-1	08-091D DAVIS COLORS GRAPHITE 8084	LITHOCRETE -	AGGREGATES: BLACK GLASS #1'S AND #2'S, SILVER ABALONE, SILICA CARBIDE
03455 GLASS FIBER-REINFORCED CONCRETE	CLARK PACIFIC GFRC PANEL - FRACTURED RIB	EXTERIOR -	GFRC-1	MATCH FRAZEE CL 2785D KORMA 11042-4 (100% WHITE CEMENT)	LIGHT MEDIUM SANDBLAST FRACTURED RIB FORM LINER	- -
04220 CONCRETE MASONRY UNITS	ORCO BLOCK COMPANY CONCRETE BLOCK	EXTERIOR SITE WALLS & PLANTERS	CMU-1	NU FAB -	SHOTBLAST WEIGHT: MEDIUM	- -
05500 METAL FABRICATIONS	McNICHOLS CO. PERFORATED STEEL PANELS	EXTERIOR STAIR -	MTL-1	STAINLESS STEEL -	SS/304 20GA -	PATTERN = 1/16RD 3/32 STG -
	CARL STAHL, X-TEND FLEXIBLE STAINLESS STL. MESH	EXT BRIDGE/DECK & INT CAFE RAILING INFILL	MTL-4	STAINLESS STEEL -	FACTORY FINISH	PATTERN: OFFICIUM, 1.5 x 60 mm
	CASCADE COIL DRAPERY. INC. WOVEN WIRE FABRIC DRAPERY	CAFE -	WWF-1	1/2" MESH, 15 GA ALUMINUM	CLEAR ANODIZED FACTORY FINISH	VERTICAL ORIENTATION VERTICAL EDGE PROTECTION
05521 STAINLESS STEEL RAILINGS	- -	INT CAFE / EXT RAILING & STANCHIONS	MTL-7	STAINLESS STEEL -	FACTORY FINISH -	- -
05580 PREFORMED METAL COLUMN COVERS	McNICHOLS CO. CC100 ROUND COLUMN COVERS	INTERIOR COLUMN COVERS -	MTL-2	CLEAR ALUMINUM -	KELP PATTERN TUFFCOAT FINISH	4" HIGH RECESSED BASE OPEN REVEALS
	FIRESTONE METAL PRODUCTS UNA-CLAD SERIES 100 UNA-FAB COLUMN	EXTERIOR COLUMN COVERS -	MTL-3	SILVERSMITH (MICA) 439RZ154IM FLUROPON CLASSIC II COATING BY VALSPAR	FACTORY FINISH 2 COAT	REFER TO SECTION 05082 FLUOROPOLYMER RESIN COATING
06410 PLASTIC LAMINATE CASEWORK	FORMICA DRY ERASE MARKERBOARD COLLECTION	CASEWORK FACE SEE INTERIOR ELEVATIONS	PLAM-1	20-454-90 BRIGHT WHITE	POLISH FINISH -	- -
	WILSONART COUNTERTOP & EDGE	LABS -	PLAM-2	4807-60 MELON BRUSH	- -	- -
	WILSONART COUNTERTOP & EDGE	CLASSROOMS -	PLAM-3	4840-60 AQUA BRUSH	- -	- -
	LAMIN-ART CABINETS	LABS CLASSROOMS	PLAM-4	5062-T METALENE ASTRO PEARLESCENCE	TEXTURED FINISH OYSTER SHIELD HIGH-WEAR	VERTICAL ORIENTATION -
	NEVAMAR CABINETS	LABS -	PLAM-5	KH3001T MARRAKESH BLUES	ARMORED PROTECTION TEXTURED	- -
	ARPA COUNTERTOP & EDGE	COMPUTER LAB SUITE -	PLAM-6	9206 ALU SNOW	ERRE FINISH -	- -
	CHEMETAL CABINETS	COMPUTER LAB SUITE -	PLAM-7	273 VENETIAN STAINLESS VERTICAL ALUMIN	- -	- -
	NOT USED -	- -	PLAM-8	- -	- -	- -
	NEVAMAR CABINETS	ADMINISTRATION SUITE WORKROOM / MAIL ROOM	PLAM-9	ALBOOIT TROPICAL ALLUSION	ARMORED PROTECTION TEXTURED	- -
	ARPA COUNTERTOP & EDGE	ADMINISTRATION SUITE RECEPTION DESK	PLAM-10	2202 BLUE JASPER	ERRE (MATTE) FINISH -	- -
	NOEL ASHBY FOR NEVAMAR COUNTERTOP & EDGE	PLANETARIUM -	PLAM-11	NOISE COLLECTION HUM ND0026-PV SAPPHIRE	- -	- -
	NEVAMAR CABINETS	PLANETARIUM	PLAM-12	PAPARAZZI JETT BLACK S 60536R	GLITTER ROCK FINISH	-
	ARBORITE WALL PANELS	ELEVATOR -	PLAM-13	TATAMI HANAIRO P-301 CA	- -	- -
	TRESPA VIRTUON	ADMIN SUITE WORKROOM COUNTERTOP	SCC-1	AZURITE BLUE J21.3.4.	SATIN -	- -
	TRESPA VIRTUON	ADMIN RECEP & NURSING SIM LAB COUNTERTOP	SCC-2	LAGOON J24.3.3/ST	- -	- -
06620 SOLID POLYMER TOPS	AVONITE SURFACES STUDIO COLLECTION	TOILET ROOM COUNTERTOPS -	SSU-1	K3-8455 ANTIQUE GLASS	SATIN 05/07 -	INTEGRAL COVE BACKSPLASH NO DRIP EDGE
	AVONITE SURFACES STUDIO COLLECTION	ADMINISTRATION SUITE RECEPTION TRANSACTION TOP	SSU-2	K3-8585 SILVER COMET	GLOSS 02/08 -	FACTORY FINISH -
	AVONITE SURFACES STUDIO COLLECTION	NURSING SIMULATION LAB NURSING STATION TRANSACTION TOP	SSU-3	K3-8575 COZUMEL	SATIN -	FACTORY FINISH -
06621 QUARTZ SURFACING	CAESARSTONE 3/4" THICK QUARTZ COUNTERTOP	PLANETARIUM -	QS-1	EBONY REFLECTIONS 7100	POLISHED -	DOUBLE RADIUS EDGE -
06655 RESIN PANELS	LUMICOR ARCHITECTURAL RESIN PANELS	INTERIOR STAIRS -	SPF-1	HONEYCOMB AM-831-101-AH, VERTICAL ORIENTATION	SANDSTONE LUMIGUARD (BOTH SIDES)	EDGE SEAL -
	LUMICOR ARCHITECTURAL RESIN PANELS	COMPUTER LAB SUITE -	SPF-2	TEAL DIFFUSION AC-824-402-TT	SANDSTONE LUMIGUARD (BOTH SIDES)	VERTICAL ORIENTATION -
	KNOLLTEXTILES IMAGO	ADMINISTRATION SUITE RECEPTION COUNTER FACE	SPF-3	LINTEL LITHOGRAPH IMLINT 03	FACTORY FINISH -	- -
	3-FORM CHROMA -	CAFE COUNTERTOP & EDGE -	PNL-2	MAI TAI, INFUSED -	FACTORY FINISH -	- -
07181 MECHANICAL ROOM TRAFFIC COATING	NEOGARD PEDA-GARD PEDESTRIAN TRAFFIC COATING	MECHANICAL ROOMS -	-	GRAY -	FACTORY FINISH -	- -
07412 ALUMINUM WALL PANELS	FIRESTONE METAL PRODUCTS UNA-CLAD SERIES 2500	EXTERIOR PANEL SYSTEM -	MP-1	SILVERSMITH (MICA) 439RZ154IM FLUROPON CLASSIC II COATING BY VALSPAR	FACTORY FINISH 2 COAT	- -
	NOT USED -	- -	MP-2	- -	- -	- -
	FIRESTONE METAL PRODUCTS UNA-CLAD SERIES 2500	EXTERIOR PANEL SYSTEM SOUTH ELEVATION	MP-3	REGAL WHITE (MICA) 431R444 FLUROPON CLASSIC II COATING BY VALSPAR	FACTORY FINISH 2 COAT	- -
07531 THERMOPLASTIC MEMBRANE ROOFING	TREMCO TPA (TRI-POLYMER ALLOY)	EXTERIOR FLAT ROOFS	PR-1	WHITE -	- -	ENERGY STAR CERTIFIED -
07600 METAL FLASHINGS AND SHEET METAL WORK	- -	INT / EXT BREAK METAL / COVE SEISMIC JOINT COVER ASSEMBLY	MTL-5	SILVERSMITH (MICA) 439RZ154IM FLUROPON CLASSIC II COATING BY VALSPAR	FACTORY FINISH 2 COAT	REFER TO SECTION 05082 FLUOROPOLYMER RESIN COATING
	- -	EXTERIOR BREAK METAL -	MTL-6	REGAL WHITE (MICA) 431R444 FLUROPON CLASSIC II COATING BY VALSPAR	FACTORY FINISH 2 COAT	REFER TO SECTION 05082 FLUOROPOLYMER RESIN COATING
	- -	STEEL TRIM -	MTL-8	SILVERSMITH (MICA) 439RZ154IM FLUROPON CLASSIC II COATING BY VALSPAR	FIELD APPLIED -	REFER TO SECTION 05082 FLUOROPOLYMER RESIN COATING
07610 METAL ROOF & WALL CLADDING SYSTEM	KALZIP 65/400 PROFILE	LECTURE HALL, EGG, & WEST ENTRY	MRW-1	SILVERSMITH (MICA) 439RZ154IM FLUROPON CLASSIC II COATING BY VALSPAR	FACTORY FINISH 2 COAT	REFER TO SECTION 05082 FLUOROPOLYMER RESIN COATING VERTICAL ORIENTATION AT WALL
08110 STEEL DOORS & FRAMES	- -	EXTERIOR -	-	- -	FACTORY FINISH -	SEE DOOR SCHEDULE REFER TO SECTION 05082 FLUOROPOLYMER RESIN COATING

MATERIALS & COLOR SCHEDULE

SPECIFICATION SECTION	MFR / PRODUCT	LOCATION	DESIGNATION	COLOR	FINISH	REMARKS
08210 WOOD DOORS	WOOD VENEER -	INTERIOR -	-	MAPLE SPECIES CUT SLICED	FACTORY FINISH -	SEE DOOR SCHEDULE -
	PAINT GRADE -	INTERIOR -	-	REFER TO SECTION 09900 PAINTING	- -	SEE DOOR SCHEDULE -
	TRANSPARENT STAIN -	PLANETARIUM -	STN-1	BLACK -	- -	- -
08410 ALUMINUM-FRAMED STOREFRONTS & ENTRANCES	UNITED STATES ALUMINUM CORP. ALUMINUM STOREFRONT	INTERIOR -	ALUM-1	CLEAR -	ANODIZED ALUMINUM -	- -
	UNITED STATES ALUMINUM CORP. ALUMINUM STOREFRONT	EXTERIOR -	ALUM-2	SILVERSMITH (MICA) 439RZ154IM FLUROPON CLASSIC II COATING BY VALSPAR	FACTORY FINISH 2 COAT	REFER TO SECTION 05082 FLUOROPOLYMER RESIN COATING
08800 GLASS & GLAZING	CLEAR FLOAT GLASS TEMPERED, 1/4" THICK	INTERIOR WINDOWS -	GL-1	- -	- -	- -
	SUNGUARD - VISION / LOW-E 1" INSULATED GLASS UNIT	EXTERIOR WINDOWS -	GL-2	1/4" SUNGUARD SN-54 ON CLEAR SRF #2 -	- -	INSULATED WITH 1/2" AIR POLY -
	SUNGUARD - VISION / LOW-E 1" INSULATED 30% FRIT GLASS UNIT	EXTERIOR WINDOWS -	GL-3	1/4" SUNGUARD SN-54 ON CLEAR SRF #2 1/4" CLEAR W/ 30% WHITE DOT FRIT SRF #3	- -	INSULATED WITH 1/2" AIR POLY -
	SUNGUARD - VISION / LOW-E 1" INSULATED 60% FRIT GLASS UNIT	EXTERIOR WINDOWS -	GL-4	1/4" SUNGUARD SN-54 ON CLEAR SRF #2 1/4" CLEAR W/ 60% WHITE DOT FRIT SRF #3	- -	INSULATED WITH 1/2" AIR POLY -
	SUNGUARD - SPANDREL 1" INSULATED GLASS UNIT	EXTERIOR WINDOWS -	GL-5	1/4" CLEAR 1/4" CLEAR W/ WARM GREY #3-0710 ON SRF #3	- -	INSULATED WITH 1/2" AIR POLY -
	SUNGUARD - SPANDREL 1" INSULATED 30% FRIT GLASS UNIT	EXTERIOR WINDOWS -	GL-6	1/4" CLEAR W/ 30% WHITE DOT FRIT ON SRF #2 1/4" CLEAR W/ WARM GREY #3-0710 ON SRF #3	- -	INSULATED WITH 1/2" AIR POLY -
	SUNGUARD - SPANDREL 1" INSULATED 60% FRIT GLASS UNIT	EXTERIOR WINDOWS -	GL-7	1/4" CLEAR W/ 60% WHITE DOT FRIT ON SRF #2 1/4" CLEAR W/ WARM GREY #3-0710 ON SRF #3	- -	INSULATED WITH 1/2" AIR POLY -
	CLEAR FLOAT GLASS NON-TEMPERED, 1/4" THICK	INTERIOR WINDOWS -	GL-8	- -	- -	- -
	GUARDIAN - SATIN DECO 1/4" SATINDECO ACID ETCHED GLASS	INTERIOR WINDOWS -	GL-9	- -	- -	- -
	CLEAR LAMINATED 1/2" THICK	INTERIOR WINDOWS -	GL-10	- -	- -	- -
	TGP FIRE RATED ISG 1" INSULATED RATED GLASS UNIT	EXTERIOR WINDOWS LECTURE HALL	GL-11	1/4" CLEAR WITH LOW-E 1/4" CLEAR FIRELITE	- -	INSULATED WITH 1/2" AIR POLY -
08900 EXTERIOR GLAZED ASSEMBLIES & ENTRANCES	UNITED STATES ALUMINUM CORP. ALUMINUM CURTAIN WALL	EXTERIOR -	CW-1	SILVERSMITH (MICA) 439RZ154IM FLUROPON CLASSIC II COATING BY VALSPAR	FACTORY FINISH 2 COAT	REFER TO SECTION 05082 FLUOROPOLYMER RESIN COATING
08950 STEEL CURTAIN WALLS	TECHNICAL GLASS PRODUCTS STEELBUILT CURTAIN WALL	EXTERIOR WINDOWS LECTURE HALL	HM-IHR	SILVERSMITH (MICA) 439RZ154IM FLUROPON CLASSIC II COATING BY VALSPAR	FACTORY FINISH 2 COAT	REFER TO SECTION 05082 FLUOROPOLYMER RESIN COATING
09220 LATH & PORTLAND CEMENT PLASTER	PAREX - ACRYLIC MODIFIED PORTLAND CEMENT PLASTER	EXTERIOR PENTHOUSE STRUCTURES	PLAS-1	A 516 WITH ELASTOMERIC FINISH TO MATCH FRAZEE CL 2785D KORMA	SMOOTH COAT TEXTURE -	REFER TO SECTION 09910 ELASTOMERIC PLASTER FINISH
	PAREX - ACRYLIC MODIFIED PORTLAND CEMENT PLASTER	EXTERIOR SOFFITS -	PLAS-2	WITH ELASTOMERIC FINISH TO MATCH FRAZEE CLW 1029W SHEEP SKIN	SMOOTH COAT TEXTURE -	REFER TO SECTION 09910 ELASTOMERIC PLASTER FINISH
	PAREX - ACRYLIC MODIFIED PORTLAND CEMENT PLASTER	EXTERIOR PENTHOUSE STRUCTURES	PLAS-3	WITH ELASTOMERIC FINISH TO MATCH VALSPAR SILVERSMITH (MICA) 439RZ154IM	SMOOTH COAT TEXTURE -	REFER TO SECTION 09910 ELASTOMERIC PLASTER FINISH
09310 CERAMIC TILE	CROSSVILLE RETRO ACTIVE PORCELAIN STONE	TOILET ROOM FLOORS ACCENT	PCT-1	B110 ANTICO TAUPE	UNPOLISHED SHEEN -	3"x3" CUT FROM 3"x12" (WOMEN'S ROOMS) AND 3"x12" (MEN'S ROOMS) REFER TO SHEET A-7.05 FOR TILE PATTERN LAYOUT
	CROSSVILLE RETRO ACTIVE PORCELAIN STONE	TOILET ROOM FLOORS ACCENT	PCT-2	C360 MAPLE SUGAR	UNPOLISHED SHEEN -	3"x3" CUT FROM 3"x12" (MEN'S ROOMS) AND 3"x12" (WOMEN'S ROOMS) REFER TO SHEET A-7.05 FOR TILE PATTERN LAYOUT
	CROSSVILLE RETRO ACTIVE PORCELAIN STONE	TOILET ROOM FLOORS FIELD	PCT-3	B210 SEABREEZE	UNPOLISHED SHEEN -	3"x12" AND 6"x12" REFER TO SHEET A-7.05 FOR TILE PATTERN LAYOUT
	CROSSVILLE RETRO ACTIVE PORCELAIN STONE	TOILET ROOM WALLS ACCENT	PCT-4	B110 ANTICO TAUPE	POLISHED SHEEN -	3"x12" AND 6"x12" (MEN'S TOILET ROOMS) REFER TO SHEET A-7.05 FOR TILE PATTERN LAYOUT
	CROSSVILLE RETRO ACTIVE PORCELAIN STONE	TOILET ROOM WALLS ACCENT	PCT-5	C360 MAPLE SUGAR	POLISHED SHEEN -	3"x12" REFER TO SHEET A-7.05 FOR TILE PATTERN LAYOUT
	CROSSVILLE RETRO ACTIVE PORCELAIN STONE	TOILET ROOM WALLS ACCENT	PCT-6	B210 SEABREEZE	POLISHED SHEEN -	3"x12" AND 6"x12" (WOMEN'S TOILET ROOMS) REFER TO SHEET A-7.05 FOR TILE PATTERN LAYOUT
	CROSSVILLE RETRO ACTIVE PORCELAIN STONE	TOILET ROOM WALLS FIELD	PCT-7	A215 EMPRESS WHITE	POLISHED SHEEN -	3"x3" TILE CUT FROM 3"x12" TILE (ALL TOILET ROOMS) 3"x12", 6"x12" AND 2"x12" COVE BASE (UPS)
	CROSSVILLE RETRO ACTIVE PORCELAIN STONE	CAFE & SERVER - FIELD TILE DRINKING FOUNTAIN WALLS	PCT-8	C360 MAPLE SUGAR	UPS -	6"X12" TILE -
	CROSSVILLE ROBERT STERN COLLECTION	CAFE & SERVING AREA ACCENT	PCT-9	BUILDING BLOX A1205 PISTACHIO	UPS -	6"x12" TILE WITH MATCHING 2"X12" COVE BASE
	DAL-TILE QUARRY TILE	COMMERCIAL KITCHEN FLOOR NUTRITION / FOOD LAB	QT-1	0Q63 DAWN	ABRASIVE GRAIN -	6" X 6" WITH MATCHING 5" COVE BASE
	MAPEI GROUT	TOILET ROOM FLOORS -	GT-1	09 GRAY (GRIS)	- -	- -
	MAPEI GROUT	TOILET ROOM WALLS -	GT-2	15 BONE	- -	- -
	MAPEI GROUT	CAFE FLOORS -	GT-3	29 GREEN TEA	- -	- -
09400 EPOXY TERRAZZO FLOORING	T.B. PENICK & SONS, INC. EXOTIC POUR-IN-PLACE TERRAZZO	PLANETARIUM HALL -	TERR-1	EX-04-50 (NATIONAL TERRAZZO & MOSAIC ASSOC) -	PER NTMA REQUIREMENTS GROUND, POLISHED, AND SEALED	WITH MATCHING PRECAST TERRAZZO BASE -
	T.B. PENICK & SONS, INC. EXOTIC POUR-IN-PLACE TERRAZZO	CORRIDORS, LOBBIES -	TERR-3	TO MATCH WAUSAU TILE #TG2-239 (TYPE B)	PER NTMA REQUIREMENTS GROUND, POLISHED, AND SEALED	BID ALTERNATE #7 WITH MATCHING PRECAST TERRAZZO BASE
	T.B. PENICK & SONS, INC. EXOTIC POUR-IN-PLACE TERRAZZO	CAFE / DINING -	TERR-4	TO MATCH WAUSAU TILE #TG2-249 (TYPEC)	PER NTMA REQUIREMENTS GROUND, POLISHED, AND SEALED	BID ALTERNATE #7 WITH MATCHING PRECAST TERRAZZO BASE
09442 PRECAST TERRAZZO UNITS	WAUSAU TILE, INC. PRECAST TERRAZZO STAIRS	INTERIOR STAIRS -	TERR-2	TG2-239 (TYPE B) RECYCLED GLASS TERRAZZO	PER NTMA REQUIREMENTS GROUND, POLISHED, AND SEALED	BID ALTERNATE #7 WITH ABRASIVE VISUAL IMPAIRMENT STRIP INSERTS
09510 ACOUSTICAL CEILINGS	USG MARS CLIMAPLUS	CLASSROOMS, OFFICES, LABS, ADMIN SUITE	ACP-1	WHITE -	FACTORY FINISH SHADOWLINE TAPERED (SLT) EDGE	DONN DX/DXL GRID PROFILE - COLOR = WHITE -
	USG SHEETROCK BRAND LAY-IN CEILING PANEL CLIMA PLUS VINYL	KITCHEN FOOD & NUTRITION LAB	ACP-2	WHITE -	FACTORY FINISH SQUARE (SQ) EDGE	DONN DX/DXL GRID PROFILE - COLOR = WHITE -
	ACCENT CLGS & WALLS MTL CLG SYS AC-210	- -	ACP-3	ALUMACERO BLACK FLEECE	FACTORY FINISH -	PERFORATION R110-24-2 LAY-IN FLAT, TEGULAR EDGED
	ACCENT CLGS & WALLS MTL CLG SYS AC-600	CORRIDORS CAFE	ACP-4	ALUMACERO BLACK FLEECE	FACTORY FINISH -	PERFORATION R110-24-2 BOX PLANK PANELS W/ CONCEALED GRID SYSTEM
09525 FABRIC COVERED ACOUSTICAL WALL PANELS	CARNEGIE ACOUSTICAL PANEL FABRIC	PLANETARIUM	AWP-1	KARMA 6984 - COLOR 26	FLAME RETARDANT (NFPA 701) UNBACKED	BID ALTERNATE
	GUILFORD OF MAINE ACOUSTICAL PANEL FABRIC	CLASSROOMS, LECTURE HALL -	AWP-2	STREETWISE 2721 = STYLE 1884 NEWSTAND = COLOR	FACTORY FINISH UNBACKED	CLASS I OR A FLAMMABILITY -

NOTES

1. ALL INTERIOR FINISHES SHALL COMPLY WITH CBC CHAPTER 8, CFC SECTION 1103.3.3. AND TITLE 19 C.C.R.
2. (P-10) IS THE FIELD COLOR FOR INTERIOR GYPSUM BOARD SURFACES, TYPICAL UNO.
3. REFER TO FINISH PLANS AND INTERIOR ELEVATIONS FOR FLOOR PATTERNS, WALL ACCENT COLORS, AND CEILING ACCENT COLORS.
4. REFER TO WINDOW SCHEDULES FOR GLAZING TYPES AND COLORS.
5. MATERIAL DESIGNATIONS MARKED WITH AN ASTERISK (RF-1*) ARE PART OF A BID ALTERNATE. SEE LIST OF BID ALTERNATES ON SHEET T-4.

ABBREVIATIONS

AC	ASPHALTIC CONCRETE
ACP	ACOUSTICAL CEILING PANEL
ACT	ACOUSTICAL CEILING TILE
ALUM	ALUMINUM
ASC	ARCHITECTURAL SUN CONTROL
AWP	ACOUSTICAL WALL PANEL
BD	BOARD
BR	BRICK
CC	CUSTOM COLOR
CD	COILING DOOR
CG	CORNER GUARD
CGL	CHANNEL GLASS
CHBD	CHALKBOARD
CHT	COMMERICAL HOMOGENEOUS TILE
CMT	CERAMIC MOSAIC TILE
CMU	CONCRETE MASONRY UNIT
CONC	CONCRETE
CPT	CARPET
CT	CERAMIC TILE
CW	CURTAIN WALL
DIR	DIRECTORY
DF	DRINKING FOUNTAIN
EM	ENTRY MATS
EP	EPOXY ENAMEL PAINT
EPXY	EPOXY / RESINOUS FLOORING
EXIST	EXISTING TO REMAIN
EXPSD	EXPOSED
FB	FABRIC
FC	FIBER CEMENT
FEC	FIRE EXTINGUISHER CABINET
FGL	FIBERGLASS
FF	FACTORY FINISH
FFP	FOLDING FABRIC PARTITION
FNC	FENCING
FPP	FOLDING PANEL PARTITION
FRP	FIBERGLASS REINFORCED PANEL
FWC	FABRIC WALL COVERING
GFRC	GLASS FIBER-REINFORCED CONCRETE
GFRG	GLASS FIBER-REINFORCED GYPSUM
GL	GLASS
GMT	GLASS MOSAIC TILE
GT	GROUT
GYP	GYPSUM
HPC	HIGH PERFORMANCE COATING
ICC	INTEGRAL COLOR CONCRETE
ID	IDENTIFYING DEVICES (SIGNS)
LIN	LINOLEUM FLOORING
LKR	LOCKER
LVB	LOUVER BLIND
LVR	LOUVER
LWS	LAMINATE WOOD SURFACING
MAR	MARBLE
MB	MARKERBOARD
MBR	MORTAR FOR BRICK
MCMU	MORTAR FOR CONCRETE MASONRY UNIT
MP	METAL PANEL / ALUMINUM WALL PANEL
MPC	METAL PAN CEILING
MR	METAL ROOFING
MRW	METAL ROOF & WALL CLADDING
MTL	METAL
P	PAINT
PART	PARTITION
PCT	PORCELAIN CERAMIC TILE
PE	PAINT EGGSHELL
PF	PAINT FLAT
PG	PAINT GLOSS
PLAM	PLASTIC LAMINATE
PLAS	PLASTER
PLS	PAINT LOW SHEEN
PMP	PERFORATED METAL PANEL
PNLF	PANEL FABRIC
PNL	PANEL, RESIN PANEL
PO	POLISHED
PR	PLASTIC ROOFING
PREFAB	PRE-FABRICATED
PSG	PAINT SEMI-GLOSS
PSS	PLAYGROUND SAFETY SURFACING
PVDF	POLYVINYLIDENE DIFLUORIDE COATING
QS	QUARTZ SURFACING
QT	QUARRY TILE
RB	RUBBER BASE
RESIL	RESILIENT FLOORING
RF	RUBBER FLOORING
RS	ROLLER SHADE
RST	RESILIENT STAIR TREAD
RTF	RUBBER TILE FLOORING
SCC	SOLID COMPOSITE COUNTERTOP
SDF	STATIC DISSIPATIVE FLOORING
SDT	STATIC DISSIPATIVE TILE
SF	SATIN FINISH
SLR	SEALER
SPF	SOLID POLYMER FABRICATION / RESIN PANEL
SPG	SOLID POLYMER GLAZING
SST	STAINLESS STEEL
SSU	SOLID SURFACE
STN	STAIN
SV	SHEET VINYL
SWF	SPECIALTY WALL FINISH / DECORATIVE PAINT FINISH
TC	TOILET COMPARTMENT
TERR	TERRAZZO
TKBD	TACKBOARD
TVWP	TACKABLE VINYL WALL PANEL
TWP	TACKABLE WALL PANEL
UOS	UNDERSIDE OF STRUCTURE
UOPR	UNDERSIDE OF PLASTIC ROOFING
UP	UNPOLISHED
UPHOL	UPHOLSTERY, UPHOLSTERED SEATING
VCT	VINYL COMPOSITION TILE
VFWC	VINYL FABRIC WALL COVERING
WWF	WELDED WIRE FABRIC or WOVEN WIRE FABRIC/ METAL FABRICATION

tBP
architecture planning interiors management

tBP/Architecture
5455 Wilshire Boulevard, Suite 1200
Los Angeles, CA 90036-4242
ph: 323. 556. 3788 fx: 323. 556. 3799
architect

LICENSED ARCHITECT JIM C. PAN, AIA NO. C26074 REN. 4-30-11 STATE OF CALIFORNIA

consultant

IDENTIFICATION STAMP
DIV. OF THE STATE ARCHITECT
OFFICE OF REGULATION SERVICES
File No. 19-C11
Appl No. 03-112201
AC ____ FLS ____ SS ____
DATE ____

DSA Los Angeles Basin Regional Office
700 North Alameda Street, Suite 5-500
Los Angeles, California 90012
ph: 213/897-3995 fx: 213/897-3159/0726
agency

ANTELOPE VALLEY COLLEGE
HEALTH & SCIENCE BUILDING
ANTELOPE VALLEY COMMUNITY COLLEGE DISTRICT
3041 WEST AVENUE K
LANCASTER, CA 93536-5426
owner

tBP project number : 20641.00
file name: Dtl-0901.dwg
drawn by: JT, MK checked by: MK
date: JULY 30, 2009 - 100% CD

Rev:	date:	description:
1	11/16/09	ADDENDUM #1
2	2/26/10	ADDENDUM #2

THIS DRAWING AND THE DESIGNS, DEPICTIONS, IDEAS AND OTHER INFORMATION CONTAINED HEREIN CONSTITUTE UNPUBLISHED WORK OF tBP/ARCHITECTURE AND SHALL REMAIN THE PROPERTY OF tBP/ARCHITECTURE IN PERPETUITY. NO PART THEREOF SHALL BE REPRODUCED, DISCLOSED, DISTRIBUTED, SOLD, PUBLISHED OR OTHERWISE USED IN ANY WAY WITHOUT THE ADVANCED EXPRESS WRITTEN CONSENT OF tBP/ARCHITECTURE.

drawing title:
MATERIALS & COLOR SCHEDULE

drawing no.:
9.01
drawing of

MATERIALS & COLOR SCHEDULE

SPECIFICATION SECTION	MFR / PRODUCT	LOCATION	DESIGNATION	COLOR	FINISH/MATERIAL	REMARKS
09650 RESILIENT FLOORING	AZROCK CORTINA GRANDE COMMERCIAL HOMOGENEOUS TILE	LABS - FIELD -	CHT-1	CG415 GALAXY -	FACTORY FINISH -	BASE BID 16" X 16"
	AZROCK CORTINA GRANDE COMMERCIAL HOMOGENEOUS TILE	LABS - ACCENT & LECTURE HALL -	CHT-2	CG417 CARIBBEAN -	FACTORY FINISH -	BASE BID 16" X 16"
	AZROCK KARIM KOLORS SOLID VINYL TILE	LABS - ACCENT -	CHT-3	HT522 KOISE -	FACTORY FINISH -	BASE BID 16" X 16"
	AZROCK CORTINA GRANDE COMMERCIAL HOMOGENEOUS TILE	LECTURE HALL - DEMO AREA -	CHT-4	CG401 ONYX -	FACTORY FINISH -	BASE BID 16" X 16"
	JOHNSONITE CIRCULINITY EFFERVESCENT (CEF) RUBBER TILE	LABS - FIELD -	RF-1*	189 OCEAN -	FACTORY FINISH -	BID ALTERNATE #11 24" X 24"
	JOHNSONITE CIRCULINITY EFFERVESCENT (CEF) RUBBER TILE	LABS - ACCENT & LECTURE HALL -	RF-2*	192 TIDEWATER -	FACTORY FINISH -	BID ALTERNATE #11 24" X 24"
	JOHNSONITE CIRCULINITY EFFERVESCENT (CEF) RUBBER TILE	LABS - ACCENT -	RF-3*	142 AQUATIC -	FACTORY FINISH -	BID ALTERNATE #11 24" X 24"
	JOHNSONITE CIRCULINITY EFFERVESCENT (CEF) RUBBER TILE	LECTURE HALL - DEMO AREA -	RF-4*	40 BLACK -	FACTORY FINISH -	BID ALTERNATE #11 24" X 24"
	NORA RUBBER FLOORING 986 LUXOR	MAIN CORRIDORS/1ST & 2ND FLRS 20" X 20"	RF-5	661, CUSTOM COLOR TO MATCH ARCHITECTURAL SAMPLE	FACTORY FINISH -	- -
	NORA RUBBER FLOORING 986 LUXOR STAIRTREAD	INTERIOR STAIRS -	RF-6	661, CUSTOM COLOR TO MATCH ARCHITECTURAL SAMPLE	FACTORY FINISH -	ONE-PIECE NOSING-TREAD-RISER COLOR OF VISUALLY IMPAIRED STRIPE AS SELECTED BY ARCHITECT
	VPI STATIC CONTROL FLOORING CONDUCTILE - 12" X 12"	IDF & BDF ROOMS / 615 LAB PLANETARIUM SUPPORT ROOMS	SDF-1	92 PATRIOT	FACTORY FINISH -	- -
09651 RESILIENT WALL BASE	JOHNSONITE TIGHTLOCK RUBBER WALLBASE RESILIENT	CLASSROOMS, GROUP STUDY, SUPPORT SPACES	RB-1	72 HARBOUR -	FACTORY FINISH -	4" HIGH -
	JOHNSONITE TIGHTLOCK RUBBER WALLBASE RESILIENT	PLANETARIUM, LECTURE HALL ADMINISTRATION SUITE	RB-2	40 BLACK -	FACTORY FINISH -	4" HIGH -
	JOHNSONITE TIGHTLOCK RUBBER WALLBASE RESILIENT	CORRIDORS, STAIRS, CAFE	RB-3	192 TIDEWATER -	FACTORY FINISH -	4" HIGH FOR USE WITH RUBBER SHEET FLOORING - BASE BID
	JOHNSONITE TIGHTLOCK RUBBER WALLBASE RESILIENT	COMPUTER LAB SUITE -	RB-4	178 IRONSTONE -	FACTORY FINISH -	4" HIGH -
	JOHNSONITE TIGHTLOCK RUBBER WALLBASE RESILIENT	LABS -	RB-5	189 OCEAN -	FACTORY FINISH -	4" HIGH -
09672 RESINOUS FLOORING	STONHARD STONSHIELD HRI	ANIMAL ROOM, SPECIMEN ROOM DISSECTION/CADAVER ROOM	EPXY-1	COBALT -	MEDIUM TEXTURE FACTORY FINISH	INTEGRAL COVE BASE -
09680 BROADLOOM CARPET	COLLINS & AIKMAN STYLE 02697 - SIRA	PLANETARIUM & LECTURE HALL -	CPT-2	35503 - SEA -	- -	PATTERN MATCH ROLL GOODS 6' ROLL GOODS
	COLLINS & AIKMAN STYLE 02888 - CIRCLET	ADMINISTRATION SUITE -	CPT-3	14208 - COMMONS -	- -	PATTERN MATCH ROLL GOODS 6' ROLL GOODS
09682 CARPET TILE	COLLINS & AIKMAN STYLE 03053 - LACCD - FRACTION	CLASSROOMS, GROUP STUDY, FACULTY OFFICES	CPT-1	10322 - BAYSHORE -	- -	RUNNING BOND INSTALLATION 18" X 18" TILE
	COLLINS & AIKMAN STYLE #02591 - ENDHARA	COMPUTER LAB SUITE - FIELD -	CPT-4	00461 - SEA -	- -	HORIZONTAL ASHLAR INSTALLATION 18" X 18" TILE
	COLLINS & AIKMAN STYLE #02591 - ENDHARA	COMPUTER LAB SUITE - ACCENT -	CPT-5	00454 - CITRON -	- -	HORIZONTAL ASHLAR INSTALLATION 18" X 18" TILE
09720 WALL COVERING	WALL TALKERS TAC WALL	CORRIDORS -	TWP-1	C250-62 PEWTER	FACTORY FINISH -	1/4" THICK, BEVELED EDGE BEVELED EDGE
	CARNEGIE XOREL	CORRIDORS -	FWC-1	STRIE 6423 F122 -	PAPER BACKED W122 -	BID ALTERNATE #12 -
	NOT USED -	- -	FWC-2	- -	- -	- -
	CARNEGIE XOREL	PLANETARIUM HALL -	FWC-3	NEXUS 6425 F418 -	PAPER BACKED W418 -	BID ALTERNATE #12 -
09725 FRP WALL PANEL	MARLITE -	JANITOR'S ROOM -	FRP-1	S100T5/2/5 WHITE	SLATE (SMOOTH GLOSS) -	- -

MATERIALS & COLOR SCHEDULE

SPECIFICATION SECTION	MFR / PRODUCT	LOCATION	DESIGNATION	COLOR	FINISH/MATERIAL	REMARKS
09900 PAINTING	FRAZEE ACCENT	EXTERIOR STEEL BRACE FRAMES	P-1	CLC 1279N BULL SHOT	SEE SPECS & FINISH SCHEDULE -	EXTERIOR CAMPUS STANDARD -
	FRAZEE ACCENT	EXTERIOR STAIR STRUCTURE INTERIOR PLANETARIUM	P-2	CL 3217N TOPSOIL	SEE SPECS & FINISH SCHEDULE -	EXTERIOR CAMPUS STANDARD -
	NOT USED -	- -	P-3	- -	- -	- -
	NOT USED -	- -	P-4	- -	- -	- -
	FRAZEE FIELD	EXTERIOR CONCRETE CURB -	P-5	CL 2785D KORMA	SEE SPECS & FINISH SCHEDULE -	EXTERIOR CAMPUS STANDARD -
	FRAZEE ACCENT	INTERIOR ACCENT COMPUTER SUITE	P-6	CL 1994M ENGLISH SAGE	SEE SPECS & FINISH SCHEDULE -	- -
	FRAZEE ACCENT	CLASSROOMS, LABS, CORRIDORS, LECTURE HALL, ADMIN SUITE	P-7	CL 2154M CACHET	SEE SPECS & FINISH SCHEDULE -	- -
	FRAZEE ACCENT	INTERIOR CAFE	P-8	CL 1536A CHUTNEY	SEE SPECS & FINISH SCHEDULE -	- -
	NOT USED -	- -	P-9	- -	- -	- -
	FRAZEE FIELD	INTERIOR, ADMIN SUITE, PUBLIC SPACES, CLASSROOMS, LABS	P-10	CLW 1038W WAPTA	SEE SPECS & FINISH SCHEDULE -	- -
	NOT USED -	- -	P-11	- -	- -	- -
	FRAZEE -	INTERIOR CORRIDORS	P-12	CL 2153W PRAYING POINT	SEE SPECS & FINISH SCHEDULE -	- -
	FRAZEE -	INTERIOR CORRIDORS	P-13	CL 2152W LIGHT AQUA	SEE SPECS & FINISH SCHEDULE -	- -
	FRAZEE -	INTERIOR CORRIDORS	P-14	CL 1993W SHADBUSH	SEE SPECS & FINISH SCHEDULE -	- -
	FRAZEE -	INTERIOR CORRIDORS	P-15	CL 1992W FEATHERY FENNEL	SEE SPECS & FINISH SCHEDULE -	- -
	FRAZEE -	INTERIOR CORRIDORS	P-16	CL 2154M CACHET	SEE SPECS & FINISH SCHEDULE -	- -
	FRAZEE -	INTERIOR - TOILET ROOMS CEILING & WALLS	P-17	CLW 1007W BLUEBERRY	SEE SPECS & FINISH SCHEDULE -	- -
	FRAZEE -	INTERIOR - LIVE ANIMAL RM, DISSECTION/CADAVER RM.	EP-1	CLW 1038W WAPTA	SEE SPECS & FINISH SCHEDULE -	- -
09940 DECORATIVE PAINT FINISH SYSTEM	SCUFFMASTER SOLID METAL	INTERIOR PLANETARIUM HALL	SWF-1	SM916 -	SATIN FINISH -	- -
10115 MARKER BOARD & TACKBOARDS	POLYVISION MODEL M5540 CONTRACTOR SERIES 555	CLASSROOMS LABS, MEETING ROOMS	MB-1	6100H HIGH GLOSS WHITE	CLEAR ANODIZED ALUM FRAME E3 CERAMICSTEEL WRITING SURFACE	WITH MAPRAIL WITH ROLLER BRACKETS, MAP HOOK/CLIP, AND FLAG HOLDER
	POLYVISION COLORED CORK TACKBOARD	CLASSROOMS LABS, MEETING ROOMS	TKBD-1	STEEL GREY 2162 -	CLEAR ANODIZED ALUM FRAME -	- -
10165 TOILET COMPARTMENTS & SCREENS	ACCURATE PARTITION CORP PHENOLIC-COLOR-THRU-PARTITIONS	TOILET ROOMS -	TC-1	4350C CAMEL	FACTORY FINISH -	FLOOR-TO-CEILING ANCHORED WITH OVERHEAD BRACING AS SHOWN -
10191 CUBICLE CURTAINS	MAHARAM PRIVACY CURTAIN	NURSING SKILLS LAB RT LAB, EMT LAB	CC-1	JAUNT 511440 004 RHYTHM	FACTORY FINISH -	- -
10200 ALUMINUM WALL LOUVERS	- -	EXTERIOR WALL LOUVERS -	LVR-1	SILVERSMITH (MICA) 434RZ1541M FLUROPON CLASSIC II COATING BY VALSPAR	FACTORY FINISH 2 COAT	REFER TO SECTION 05082 FLUOROPOLYMER RESIN COATING
10260 CORNER GUARDS	BELLAGARD BY KOROSEAL TEXTURED SS CORNER GUARDS	- -	CG-1	VS34-S3 PATTERN -	#4 SATIN -	4 FEET TALL SQUARE CROWN, 3-1/2" WING
10400 IDENTIFYING DEVICES	ASI-MODULEX INFINITY SERIES	INTERIOR MODULAR SYSTEM	ID-1	ARCHITECT TO SELECT -	ARCHITECT TO SELECT -	- -
	ASI-MODULEX DIMENSIONAL LETTERS - LPS SERIES	EXTERIOR FABRICATED METAL LETTERS	ID-2	STAINLESS STEEL -	SATIN FACE AND SIDES -	12" HIGH OR MORE -
	ASI-MODULEX DIMENSIONAL LETTERS - LF SERIES	EXTERIOR CUT METAL LETTERS	ID-3	STAINLESS STEEL -	SATIN FACE AND SIDES -	HEIGHTS LESS THAN 12" -
10500 METAL LOCKERS	ASI STORAGE SOLUTIONS TRADITIONAL COLLECTION	KITCHEN -	LKR-1	SKY BLUE #31 -	FACTORY FINISH -	SEE DRAWINGS FOR TIER CONFIGURATION -
	ASI STORAGE SOLUTIONS TRADITIONAL COLLECTION	FOOD & NUTRITION LAB -	LKR-2	SKY BLUE #31 -	FACTORY FINISH -	SEE DRAWINGS FOR TIER CONFIGURATION -
10705 ARCHITECTURAL SUNSHADES	ASCA, INC -	EXTERIOR SUNSHADES HORIZONTAL	ASC-1	SILVERSMITH (MICA) 434RZ1541M FLUROPON CLASSIC II COATING BY VALSPAR	FACTORY FINISH 2 COAT	REFER TO SECTION 05082 FLUOROPOLYMER RESIN COATING
	UNITED STATES ALUMINUM CORP. -	EXTERIOR SUNSHADES VERTICAL FINS	ASC-2	MATCH FRAZEE CL 2193M NIMBUS FLUROPON CLASSIC SYSTEM BY VALSPAR	FACTORY FINISH 3 COAT	REFER TO SECTION 05082 FLUOROPOLYMER RESIN COATING
	UNITED STATES ALUMINUM CORP. -	EXTERIOR SUNSHADES VERTICAL FINS	ASC-3	MATCH FRAZEE CL 2195D PORT CULLIS FLUROPON CLASSIC SYSTEM BY VALSPAR	FACTORY FINISH 3 COAT	REFER TO SECTION 05082 FLUOROPOLYMER RESIN COATING
	UNITED STATES ALUMINUM CORP. -	EXTERIOR SUNSHADES VERTICAL FINS	ASC-4	MATCH FRAZEE CL 2197N GALWAY FLUROPON CLASSIC SYSTEM BY VALSPAR	FACTORY FINISH 3 COAT	REFER TO SECTION 05082 FLUOROPOLYMER RESIN COATING
	UNITED STATES ALUMINUM CORP. -	EXTERIOR SUNSHADES HORIZONTAL ATTACH TO CURTAIN WALL	ASC-5	SILVERSMITH (MICA) 434RZ1541M FLUROPON CLASSIC II COATING BY VALSPAR	FACTORY FINISH 2 COAT	REFER TO SECTION 05082 FLUOROPOLYMER RESIN COATING
12490 ROLLER SHADES	LUTRON SHEER SHADE DESIGNER TREVIRA CS	FACULTY OFFICES ADMINISTRATION SUITE	RS-1	BONE SD-7101-58	10% OPEN -	EXPOSED ANODIZED ALUMINUM BOTTOM BAR WITH GRAY ENDCAP
	LUTRON SHEER SHADE BASKETWEAVE XL	CLASSROOMS LABS	RS-2	WHITE PEARL SXL-WP	5% OPEN -	EXPOSED ANODIZED ALUMINUM BOTTOM BAR WITH GRAY ENDCAP
	LUTRON BLACKOUT VALUE PREMIER	PHYSICS LAB OBSERVATION DECK	RS-3	GRAPHITE BP-V39-O	0% OPEN -	EXPOSED ANODIZED ALUMINUM BOTTOM BAR WITH GRAY ENDCAP
12680 FOOT GRILLES	REESE PERFECT MAT (ALUMINUM HINGE)	- -	EM-1	TREAD #547 DIAMOND PEAK VINYL=GRAY & BLUE ALUMINUM RECESSED FRAME #540	MILL FINISH -	RECESSED APPLICATION, STRIPED PATTERN ALUMINUM HINGE
12730 UPHOLSTERED SEATING	MAHARAM PATTERN: VENN 464360	CAFE SETTEE UPHOLSTERED BACK	UPHOL-1	007 CAYMAN -	- -	- -
	WOLF GORDON PATTERN: 66195746	CAFE SETTEE UPHOLSTERED SEAT	UPHOL-2	YBOR CELERY -	- -	- -

NOTES

1. ALL INTERIOR FINISHES SHALL COMPLY WITH CBC CHAPTER 8, CFC SECTION 1103.3.3. AND TITLE 19 C.C.R.
2. (P-10) IS THE FIELD COLOR FOR INTERIOR GYPSUM BOARD SURFACES, TYPICAL UNO.
3. REFER TO FINISH PLANS AND INTERIOR ELEVATIONS FOR FLOOR PATTERNS, WALL ACCENT COLORS, AND CEILING ACCENT COLORS.
4. REFER TO WINDOW SCHEDULES FOR GLAZING TYPES AND COLORS.
5. MATERIAL DESIGNATIONS MARKED WITH AN ASTERISK (RF-1*) ARE PART OF A BID ALTERNATE. SEE LIST OF BID ALTERNATES ON SHEET T-4.

ABBREVIATIONS

AC	ASPHALTIC CONCRETE
ACP	ACOUSTICAL CEILING PANEL
ACT	ACOUSTICAL CEILING TILE
ALUM	ALUMINUM
ASC	ARCHITECTURAL SUN CONTROL
AWP	ACOUSTICAL WALL PANEL
BD	BOARD
BR	BRICK
CC	CUSTOM COLOR
CD	COILING DOOR
CG	CORNER GUARD
CGL	CHANNEL GLASS
CHBD	CHALKBOARD
CHT	COMMERICAL HOMOGENEOUS TILE
CMT	CERAMIC MOSAIC TILE
CMU	CONCRETE MASONRY UNIT
CONC	CONCRETE
CPT	CARPET
CT	CERAMIC TILE
CW	CURTAIN WALL
DIR	DIRECTORY
DF	DRINKING FOUNTAIN
EM	ENTRY MATS
EP	EPOXY ENAMEL PAINT
EPXY	EPOXY / RESINOUS FLOORING
EXIST	EXISTING TO REMAIN
EXPSD	EXPOSED
FB	FABRIC
FC	FIBER CEMENT
FEC	FIRE EXTINGUISHER CABINET
FGL	FIBERGLASS
FF	FACTORY FINISH
FFP	FOLDING FABRIC PARTITION
FNC	FENCING
FPP	FOLDING PANEL PARTITION
FRP	FIBERGLASS REINFORCED PANEL
FWC	FABRIC WALL COVERING
GFRC	GLASS FIBER-REINFORCED CONCRETE
GFRG	GLASS FIBER-REINFORCED GYPSUM
GL	GLASS
GMT	GLASS MOSAIC TILE
GT	GROUT
GYP	GYPSUM
HPC	HIGH PERFORMANCE COATING
ICC	INTEGRAL COLOR CONCRETE
ID	IDENTIFYING DEVICES (SIGNS)
LIN	LINOLEUM FLOORING
LKR	LOCKER
LVB	LOUVER BLIND
LVR	LOUVER
LWS	LAMINATE WOOD SURFACING
MAR	MARBLE
MB	MARKERBOARD
MBR	MORTAR FOR BRICK
MCMU	MORTAR FOR CONCRETE MASONRY UNIT
MP	METAL PANEL / ALUMINUM WALL PANEL
MPC	METAL PAN CEILING
MR	METAL ROOFING
MRW	METAL ROOF & WALL CLADDING
MTL	METAL
P	PAINT
PART	PARTITION
PCT	PORCELAIN CERAMIC TILE
PE	PAINT EGGSHELL
PF	PAINT FLAT
PG	PAINT GLOSS
PLAM	PLASTIC LAMINATE
PLAS	PLASTER
PLS	PAINT LOW SHEEN
PMP	PERFORATED METAL PANEL
PNLF	PANEL FABRIC
PNL	PANEL, RESIN PANEL
PO	POLISHED
PR	PLASTIC ROOFING
PREFAB	PRE-FABRICATED
PSG	PAINT SEMI-GLOSS
PSS	PLAYGROUND SAFETY SURFACING
PVDF	POLYVINYLIDENE DIFLUORIDE COATING
QS	QUARTZ SURFACING
QT	QUARRY TILE
RB	RUBBER BASE
RESIL	RESILIENT FLOORING
RF	RUBBER FLOORING
RS	ROLLER SHADE
RST	RESILIENT STAIR TREAD
RTF	RUBBER TILE FLOORING
SCC	SOLID COMPOSITE COUNTERTOP
SDF	STATIC DISSIPATIVE FLOORING
SDT	STATIC DISSIPATIVE TILE
SF	SATIN FINISH
SLR	SEALER
SPF	SOLID POLYMER FABRICATION / RESIN PANEL
SPG	SOLID POLYMER GLAZING
SST	STAINLESS STEEL
SSU	SOLID SURFACE
STN	STAIN
SV	SHEET VINYL
SWF	SPECIALTY WALL FINISH / DECORATIVE PAINT FINISH
TC	TOILET COMPARTMENT
TERR	TERRAZZO
TKBD	TACKBOARD
TVWP	TACKABLE VINYL WALL PANEL
TWP	TACKABLE WALL PANEL
UOS	UNDERSIDE OF STRUCTURE
UOPR	UNDERSIDE OF PLASTIC ROOFING
UP	UNPOLISHED
UPHOL	UPHOLSTERY, UPHOLSTERED SEATING
VCT	VINYL COMPOSITION TILE
VFWC	VINYL FABRIC WALL COVERING
WWF	WELDED WIRE FABRIC or WOVEN WIRE FABRIC/ METAL FABRICATION

tBP
architecture planning interiors management

LICENSED ARCHITECT
TIM C. PAN, AIA
NO. C26074
REN. 4-30-11
STATE OF CALIFORNIA

tBP/Architecture
5455 Wilshire Boulevard, Suite 1200
Los Angeles, CA 90036-4242
ph: 323. 556. 3788 fx: 323. 556. 3799
architect

consultant

IDENTIFICATION STAMP
DIV. OF THE STATE ARCHITECT
OFFICE OF REGULATION SERVICES
File No. 19-C11
Appl No. 03-112201
AC ____ FLS ____ SS ____
DATE ____

DSA Los Angeles Basin Regional Office
700 North Alameda Street, Suite 5-500
Los Angeles, California 90012
ph: 213/897-3995 fx: 213/897-3159/0726
agency

ANTELOPE VALLEY COLLEGE
HEALTH & SCIENCE BUILDING
ANTELOPE VALLEY COMMUNITY COLLEGE DISTRICT
3041 WEST AVENUE K
LANCASTER, CA 93536-5426
owner

tBP project number : 20641.00
file name: DtI-0902.dwg
drawn by: JT, MK checked by: MK
date: JULY 30, 2009 - 100% CD

Rev:	date:	description:
1	11/16/09	ADDENDUM #1
2	2/26/10	ADDENDUM #2

THIS DRAWING AND THE DESIGNS, DEPICTIONS, IDEAS AND OTHER INFORMATION CONTAINED HEREIN CONSTITUTE UNPUBLISHED WORK OF tBP/ARCHITECTURE AND SHALL REMAIN THE PROPERTY OF tBP/ARCHITECTURE IN PERPETUITY. NO PART THEREOF SHALL BE REPRODUCED, DISCLOSED, DISTRIBUTED, SOLD, PUBLISHED OR OTHERWISE USED IN ANY WAY WITHOUT THE ADVANCED EXPRESS WRITTEN CONSENT OF tBP/ARCHITECTURE.

drawing title:
MATERIALS & COLOR SCHEDULE

drawing no.:
9.02
drawing of

FINISH SCHEDULE

SPACE		FLOOR				BASE				WALLS				CEILING					REMARKS
NO.	NAME	MATERIAL	TYPE	FINISH	COLOR	MATERIAL	HEIGHT	FINISH	COLOR	MATERIAL	TYPE	FINISH	COLOR	MATERIAL	TYPE	FINISH	COLOR	HEIGHT	
	FIRST FLOOR																		
HS 100	OFFICE	CARPET	-	FF	CPT-1	RUBBER	4"	FF	RB-1	GYPSUM BOARD	-	PE	-	ACOUSTICAL PANEL		FF	ACP-1	SEE REFLECTED	-
		-	-	-	-	-	-	-	-	-	-	-	-	-		-	-	CEILING PLAN	-
HS 101	EMT LAB	CHT	-	FF	CHT-1 (RF-1*)	RUBBER	4"	FF	RB-5	GYPSUM BOARD	-	PE	-	ACOUSTICAL PANEL		FF	ACP-1	SEE REFLECTED	-
		-	-	-	CHT-2 (RF-2*)	-	-	-	-	-	-	-	-	GYPSUM BOARD		PE	-	CEILING PLAN	-
HS 101A	EMT LAB STORAGE	CHT	-	FF	CHT-2 (RF-2*)	RUBBER	4"	FF	RB-5	GYPSUM BOARD	-	PE	-	GYPSUM BOARD		FF	-	SEE REFLECTED	-
		-	-	-	-	-	-	-	-	-	-	-	-	-		-	-	CEILING PLAN	-
HS 101B	EMT MOCK LIVING ROOM	CHT	-	FF	CHT-1 (RF-1*)	RUBBER	4"	FF	RB-5	GYPSUM BOARD	-	PE	-	ACOUSTICAL PANEL		FF	ACP-1	SEE REFLECTED	-
		-	-	-	-	-	-	-	-	-	-	-	-	-		-	-	CEILING PLAN	-
HS 102	OFFICE	CARPET	-	FF	CPT-1	RUBBER	4"	FF	RB-1	GYPSUM BOARD	-	PE	-	ACOUSTICAL PANEL		FF	ACP-1	SEE REFLECTED	-
		-	-	-	-	-	-	-	-	-	-	-	-	-		-	-	CEILING PLAN	-
HS 103	CLASSROOM	CARPET	-	FF	CPT-1	RUBBER	4"	FF	RB-1	GYPSUM BOARD	-	PE	-	ACOUSTICAL PANEL		FF	ACP-1	SEE REFLECTED	-
		-	-	-	-	-	-	-	-	-	-	-	-	GYPSUM BOARD		PE	-	CEILING PLAN	-
HS 104	OFFICE	CARPET	-	FF	CPT-1	RUBBER	4"	FF	RB-1	GYPSUM BOARD	-	PE	-	ACOUSTICAL PANEL		FF	ACP-1	SEE REFLECTED	-
		-	-	-	-	-	-	-	-	-	-	-	-	-		-	-	CEILING PLAN	-
HS 105	CLASSROOM	CARPET	-	FF	CPT-1	RUBBER	4"	FF	RB-1	GYPSUM BOARD	-	PE	-	ACOUSTICAL PANEL		FF	ACP-1	SEE REFLECTED	-
		-	-	-	-	-	-	-	-	-	-	-	-	GYPSUM BOARD		PE	-	CEILING PLAN	-
HS 106	OFFICE	CARPET	-	FF	CPT-1	RUBBER	4"	FF	RB-1	GYPSUM BOARD	-	PE	-	ACOUSTICAL PANEL		FF	ACP-1	SEE REFLECTED	-
		-	-	-	-	-	-	-	-	-	-	-	-	-		-	-	CEILING PLAN	-
HS 107	SOUTH CORRIDOR	RUBBER	-	FF	RF-5	RUBBER	4"	FF	RB-3	GYPSUM BOARD	-	PE	P-10	ACOUSTICAL PANEL		FF	-	SEE REFLECTED	SEE INTER ELEV FOR ACCENT PAINT
		-	-	-	-	-	-	-	-	WALL COVERING	-	-	TWP-1	GYPSUM BOARD		PE	-	CEILING PLAN	
	△1 △2	TERRAZZO*	-	FF	TERR-3*	TERRAZZO*	4"	FF	TERR-3*	-	-	-	-	-		-	-	-	BID ALTERNATE #7 BID ALTERNATE #12, SEE INT. ELEVS.
		-	-	-	-	-	-	-	-	WALL COVERING	-	-	FWC-1*	-		-	-	-	
HS 108	OFFICE	CARPET	-	FF	CPT-1	RUBBER	4"	FF	RB-1	GYPSUM BOARD	-	PE	-	ACOUSTICAL PANEL		FF	ACP-1	SEE REFLECTED	
		-	-	-	-	-	-	-	-	-	-	-	-	-		-	-	CEILING PLAN	-
HS 109	DISTANCE LEARNING CLASSROOM	CARPET	-	FF	CPT-1	RUBBER	4"	FF	RB-1	GYPSUM BOARD	-	PE	-	ACOUSTICAL PANEL		FF	ACP-1	SEE REFLECTED	-
		-	-	-	-	-	-	-	-	-	-	-	-	GYPSUM BOARD		PE	-	CEILING PLAN	-
HS 110	OFFICE	CARPET	-	FF	CPT-1	RUBBER	4"	FF	RB-1	GYPSUM BOARD	-	PE	-	ACOUSTICAL PANEL		FF	ACP-1	SEE REFLECTED	-
		-	-	-	-	-	-	-	-	-	-	-	-	-		-	-	CEILING PLAN	-
HS 111	RT / MOA LAB	CHT	-	FF	CHT-1 (RF-1*)	RUBBER	4"	FF	RB-5	GYPSUM BOARD	-	PE	-	ACOUSTICAL PANEL		FF	-	SEE REFLECTED	-
		-	-	-	CHT-2 (RF-2*)	-	-	-	-	-	-	-	-	GYPSUM BOARD		PE	-	CEILING PLAN	-
HS 111A	MOA PATIENT BED AREA	CHT	-	FF	CHT-1 (RF-1*)	RUBBER	4"	FF	RB-5	GYPSUM BOARD	-	PE	-	ACOUSTICAL PANEL		FF	-	SEE REFLECTED	-
		-	-	-	CHT-2 (RF-2*)	-	-	-	-	-	-	-	-	GYPSUM BOARD		PE	-	CEILING PLAN	-
HS 111B	MOA PREP	CHT	-	FF	CHT-1 (RT-1*)	RUBBER	4"	FF	RB-5	GYPSUM BOARD	-	PE	-	ACOUSTICAL PANEL		FF	-	SEE REFLECTED	-
		-	-	-	-	-	-	-	-	-	-	-	-	GYPSUM BOARD		PE	-	CEILING PLAN	-
HS 111C	GAS STORAGE	CHT	-	FF	CHT-1	RUBBER	4"	FF	RB-5	GYPSUM BOARD	-	PE	-	ACOUSTICAL PANEL		FF	-	SEE REFLECTED	-
		-	-	-	-	-	-	-	-	-	-	-	-	-		-	-	CEILING PLAN	-
HS 111D	COMPRESSOR ROOM	CHT	-	FF	CHT-1	RUBBER	4"	FF	RB-5	GYPSUM BOARD	-	PE	-	UOS		FF	-	SEE REFLECTED	-
		-	-	-	-	-	-	-	-	-	-	-	-	-		-	-	CEILING PLAN	-
HS 111E	RT & VENTILATOR STORAGE	CHT	-	FF	CHT-2	RUBBER	4"	FF	RB-5	GYPSUM BOARD	-	PE	-	ACOUSTICAL PANEL		FF	-	SEE REFLECTED	-
		-	-	-	-	-	-	-	-	-	-	-	-	GYPSUM BOARD		PE	-	CEILING PLAN	GYP BD ABOVE ENTRY DOOR
HS 111F	RT / MOA STORAGE	CHT	-	FF	CHT-2	RUBBER	4"	FF	RB-5	GYPSUM BOARD	-	PE	-	ACOUSTICAL PANEL		FF	-	SEE REFLECTED	-
		-	-	-	-	-	-	-	-	-	-	-	-	-		PE	-	CEILING PLAN	-
HS 112	OFFICE	CARPET	-	FF	CPT-1	RUBBER	4"	FF	RB-1	GYPSUM BOARD	-	PE	-	ACOUSTICAL PANEL		FF	ACP-1	SEE REFLECTED	-
		-	-	-	-	-	-	-	-	-	-	-	-	-		-	-	CEILING PLAN	-
HS 113	CLASSROOM	CARPET	-	FF	CPT-1	RUBBER	4"	FF	RB-1	GYPSUM BOARD	-	PE	-	ACOUSTICAL PANEL		FF	ACP-1	SEE REFLECTED	-
		-	-	-	-	-	-	-	-	-	-	-	-	GYPSUM BOARD		PE	-	CEILING PLAN	-
HS 114	OFFICE	CARPET	-	FF	CPT-1	RUBBER	4"	FF	RB-1	GYPSUM BOARD	-	PE	-	ACOUSTICAL PANEL		FF	ACP-1	SEE REFLECTED	-
		-	-	-	-	-	-	-	-	-	-	-	-	-		-	-	CEILING PLAN	-
HS 116	MACHINE ROOM	CONCRETE	-	FF	SLR	RUBBER	4"	FF	RB-5	GYPSUM BOARD	-	PE	-	UOS		-	-	SEE REFLECTED	-
		-	-	-	-	-	-	-	-	-	-	-	-	-		-	-	CEILING PLAN	-
HS 117	VESTIBULE	RUBBER	-	FF	RF-5	RUBBER	4"	FF	RB-3	GYPSUM BOARD	-	PE	-	ACOUSTICAL PANEL		FF	ACP-1	SEE REFLECTED	-
		-	-	-	-	-	-	-	-	-	-	-	-	GYPSUM BOARD		PE	-	CEILING PLAN	
	△1	TERRAZZO*	-	FF	TERR-3*	TERRAZZO*	4"	FF	TERR-3*	-	-	-	-	-		-	-	-	BID ALTERNATE #7
		-	-	-	-	-	-	-	-	-	-	-	-	-		-	-	-	-
HS 118	OFFICE	CARPET	-	FF	CPT-1	RUBBER	4"	FF	RB-1	GYPSUM BOARD	-	PE	-	ACOUSTICAL PANEL		FF	ACP-1	SEE REFLECTED	
		-	-	-	-	-	-	-	-	-	-	-	-	-		-	-	CEILING PLAN	-
HS 119 119A	CLASSROOM	CARPET	-	FF	CPT-1	RUBBER	4"	FF	RB-1	GYPSUM BOARD	-	PE	-	ACOUSTICAL PANEL		FF	ACP-1	SEE REFLECTED	-
		-	-	-	-	-	-	-	-	-	-	-	-	GYPSUM BOARD		PE	-	CEILING PLAN	-
HS 120	OFFICE	CARPET	-	FF	CPT-1	RUBBER	4"	FF	RB-1	GYPSUM BOARD	-	PE	-	ACOUSTICAL PANEL		FF	ACP-1	SEE REFLECTED	-
		-	-	-	-	-	-	-	-	-	-	-	-	-		-	-	CEILING PLAN	-
HS 121	GROUP STUDY ROOM	CARPET	-	FF	CPT-1	RUBBER	4"	FF	RB-1	GYPSUM BOARD	-	PE	-	ACOUSTICAL PANEL		FF	ACP-1	SEE REFLECTED	-
		-	-	-	-	-	-	-	-	-	-	-	-	GYPSUM BOARD		PE	-	CEILING PLAN	-
HS 122	OFFICE	CARPET	-	FF	CPT-1	RUBBER	4"	FF	RB-1	GYPSUM BOARD	-	PE	-	ACOUSTICAL PANEL		FF	ACP-1	SEE REFLECTED	-
		-	-	-	-	-	-	-	-	-	-	-	-	-		-	-	CEILING PLAN	-
HS 123	MEN'S TOILET ROOM	PORCELAIN CERAMIC TILE	-	UP	PCT-1	PORCELAIN CERAMIC TILE	2"	UP	PCT-7	PORCELAIN CERAMIC TILE	-	PO	PCT-4	GYPSUM BOARD		PSG	P-17	SEE REFLECTED	-
		PORCELAIN CERAMIC TILE	-	UP	PCT-2	GROUT	-	FF	GT-2	PORCELAIN CERAMIC TILE	-	PO	PCT-5	-		-	-	CEILING PLAN	-
		PORCELAIN CERAMIC TILE	-	UP	PCT-3	-	-	-	-	PORCELAIN CERAMIC TILE	-	PO	PCT-6	-		-	-	-	-
		GROUT	-	FF	GT-1	-	-	-	-	PORCELAIN CERAMIC TILE	-	PO	PCT-7	-		-	-	-	-
		-	-	-	-	-	-	-	-	GYPSUM BOARD	-	PSG	P-17	-		-	-	-	-
		-	-	-	-	-	-	-	-	GROUT	-	FF	GT-2	-		-	-	-	-
HS 124	OFFICE	CARPET	-	FF	CPT-1	RUBBER	4"	FF	RB-1	GYPSUM BOARD	-	PE	-	ACOUSTICAL PANEL		FF	ACP-1	SEE REFLECTED	-
		-	-	-	-	-	-	-	-	-	-	-	-	-		-	-	CEILING PLAN	-
HS 125	WOMEN'S TOILET ROOM	PORCELAIN CERAMIC TILE	-	UP	PCT-1	PORCELAIN CERAMIC TILE	2"	UP	PCT-7	PORCELAIN CERAMIC TILE	-	PO	PCT-4	GYPSUM BOARD		PSG	P-17	SEE REFLECTED	-
		PORCELAIN CERAMIC TILE	-	UP	PCT-2	GROUT	-	FF	GT-2	PORCELAIN CERAMIC TILE	-	PO	PCT-5	-		-	-	CEILING PLAN	-
		PORCELAIN CERAMIC TILE	-	UP	PCT-3	-	-	-	-	PORCELAIN CERAMIC TILE	-	PO	PCT-6	-		-	-	-	-
		GROUT	-	FF	GT-1	-	-	-	-	PORCELAIN CERAMIC TILE	-	PO	PCT-7	-		-	-	-	-
		-	-	-	-	-	-	-	-	GYPSUM BOARD	-	PSG	P-17	-		-	-	-	-
		-	-	-	-	-	-	-	-	GROUT	-	FF	GT-2	-		-	-	-	-
HS 126	BDF/IDF ROOM	STATIC DISSIPATIVE	-	FF	SDF-1	RUBBER	4"	FF	RB-1	GYPSUM BOARD	-	PE	-	ACOUSTICAL PANEL		FF	ACP-1	SEE REFLECTED	-
		-	-	-	-	-	-	-	-	-	-	-	-	-		-	-	CEILING PLAN	-
HS 127	ANATOMY LAB	-	-	FF	CHT-1 (RF-1*)	RUBBER	4"	FF	RB-5	GYPSUM BOARD	-	PE	-	ACOUSTICAL PANEL		FF	ACP-1	SEE REFLECTED	-
		-	-	-	-	-	-	-	-	-	-	-	-	GYPSUM BOARD		PE	-	CEILING PLAN	-
HS 127A	SPECIMEN ROOM	TROWELLED EPOXY	-	FF	EPXY-1	INTEGRAL EPOXY	6"	FF	EPXY-1	GYPSUM BOARD	-	EP	EP-1	GYPSUM BOARD		EP	EP-1	SEE REFLECTED	-
		-	-	-	-	-	-	-	-	-	-	-	-	-		-	-	CEILING PLAN	-
HS 128	OFFICE	CARPET	-	FF	CPT-1	RUBBER	4"	FF	RB-1	GYPSUM BOARD	-	PE	-	ACOUSTICAL PANEL		FF	ACP-1	SEE REFLECTED	-
		-	-	-	-	-	-	-	-	-	-	-	-	-		-	-	CEILING PLAN	-
HS 129	WEST CORRIDOR	RUBBER	-	FF	RF-5	RUBBER	4"	FF	RB-3	GYPSUM BOARD	-	PE	P-10	ACOUSTICAL PANEL		FF	-	SEE REFLECTED	SEE INTER ELEV FOR ACCENT PAINT
		-	-	-	-	-	-	-	-	WALL COVERING	-	-	-	GYPSUM BOARD		PE	-	CEILING PLAN	
	△1 △2	TERRAZZO*	-	FF	TERR-3*	TERRAZZO*	4"	FF	TERR-3*	-	-	-	-	-		-	-	-	BID ALTERNATE #7 BID ALTERNATE #12, SEE INT. ELEVS.
		-	-	-	-	-	-	-	-	WALL COVERING	-	-	FWC-1*	-		-	-	-	
HS 130	OFFICE	CARPET	-	FF	CPT-1	RUBBER	4"	FF	RB-1	GYPSUM BOARD	-	PE	-	ACOUSTICAL PANEL		FF	ACP-1	SEE REFLECTED	
		-	-	-	-	-	-	-	-	-	-	-	-	-		-	-	CEILING PLAN	-
HS 131	DISSECTION / CADAVER ROOM	TROWELLED EPOXY	-	FF	EPXY-1	INTEGRAL EPOXY	6"	FF	EPXY-1	GYPSUM BOARD	-	EP	EP-1	GYPSUM BOARD		EP	EP-1	SEE REFLECTED	-
		-	-	-	-	-	-	-	-	-	-	-	-	-		-	-	CEILING PLAN	-
HS 132	OFFICE	CARPET	-	FF	CPT-1	RUBBER	4"	FF	RB-1	GYPSUM BOARD	-	PE	-	ACOUSTICAL PANEL		FF	ACP-1	SEE REFLECTED	-
		-	-	-	-	-	-	-	-	-	-	-	-	-		-	-	CEILING PLAN	-
HS 133	PHYSIOLOGY LAB	-	-	FF	CHT-1 (RF-1*)	RUBBER	4"	FF	RB-5	GYPSUM BOARD	-	PE	-	ACOUSTICAL PANEL		FF	ACP-1	SEE REFLECTED	-
		-	-	-	-	-	-	-	-	-	-	-	-	GYPSUM BOARD		PE	-	CEILING PLAN	-
HS 133A	LIVE ANIMAL ROOM	TROWELLED EPOXY	-	FF	EPXY-1	INTEGRAL EPOXY	6"	FF	EPXY-1	GYPSUM BOARD	-	EP	EP-1	GYPSUM BOARD		EP	EP-1	SEE REFLECTED	-
		-	-	-	-	-	-	-	-	-	-	-	-	-		-	-	CEILING PLAN	-
HS 134	OFFICE	CARPET	-	FF	CPT-1	RUBBER	4"	FF	RB-1	GYPSUM BOARD	-	PE	-	ACOUSTICAL PANEL		FF	ACP-1	SEE REFLECTED	-
		-	-	-	-	-	-	-	-	-	-	-	-	-		-	-	CEILING PLAN	-
HS 135	NUTRITION / FOOD LAB	QUARRY TILE	-	FF	QT-1	QUARRY TILE	6"	FF	QT-1	GYPSUM BOARD	-	PSG	-	ACOUSTICAL PANEL		FF	ACP-2	SEE REFLECTED	-
		-	-	-	-	3/8" MIN RAD COVE	-	-	-	-	-	-	-	GYPSUM BOARD		PSG	-	CEILING PLAN	-
HS 135A	WINE STORAGE ROOM	CHT	-	FF	CHT-2 (RF-2*)	RUBBER	4"	FF	RB-5	GYPSUM BOARD	-	PSG	-	GYPSUM BOARD		PSG	-	SEE REFLECTED	-
		-	-	-	-	-	-	-	-	-	-	-	-	-		-	-	CEILING PLAN	-
HS 135B	REFRIGERATOR ALCOVE	CHT	-	FF	CHT-1 (RF-1*)	RUBBER	4"	FF	RB-5	GYPSUM BOARD	-	PSG	-	ACOUSTICAL PANEL		FF	ACP-2	SEE REFLECTED	-
		-	-	-	-	-	-	-	-	-	-	-	-	-		-	-	CEILING PLAN	-
HS 135C	STUDENT PREP	CHT	-	FF	CHT-2 (RF-2*)	RUBBER	4"	FF	RB-5	GYPSUM BOARD	-	PSG	-	ACOUSTICAL PANEL		FF	ACP-2	SEE REFLECTED	-
		-	-	-	-	-	-	-	-	-	-	-	-	-		-	-	CEILING PLAN	-
HS 136	OFFICE	CARPET	-	FF	CPT-1	RUBBER	4"	FF	RB-1	GYPSUM BOARD	-	PE	-	ACOUSTICAL PANEL		FF	ACP-1	SEE REFLECTED	-
		-	-	-	-	-	-	-	-	-	-	-	-	-		-	-	CEILING PLAN	-
HS 137	CAFE SERVING AREA	-	-	-	-	-	-	-	-	-	-	-	-	-		-	-	-	NO FINISHES.
		-	-	-	-	-	-	-	-	-	-	-	-	-		-	-	-	WARM SHELL SPACE.

FINISH SCHEDULE

SPACE		FLOOR				BASE				WALLS				CEILING					REMARKS
NO.	NAME	MATERIAL	TYPE	FINISH	COLOR	MATERIAL	HEIGHT	FINISH	COLOR	MATERIAL	TYPE	FINISH	COLOR	MATERIAL	TYPE	FINISH	COLOR	HEIGHT	
	FIRST FLOOR																		
HS 138	OFFICE	CARPET	-	FF	CPT-1	RUBBER	4"	FF	RB-1	GYPSUM BOARD	-	PE	-	ACOUSTICAL PANEL		FF	ACP-1	SEE REFLECTED	-
		-	-	-	-	-	-	-	-	-	-	-	-	-		-	-	CEILING PLAN	-
HS 140	OFFICE	CARPET	-	FF	CPT-1	RUBBER	4"	FF	RB-1	GYPSUM BOARD	-	PE	-	ACOUSTICAL PANEL		FF	ACP-1	SEE REFLECTED	-
		-	-	-	-	-	-	-	-	-	-	-	-	-		-	-	CEILING PLAN	-
HS 141	CAFE / KITCHEN	-	-	-	-	-	-	-	-	-	-	-	-	ACOUSTICAL PANEL		FF	ACP-2	SEE REFLECTED	NO FLOOR OR WALL FINISHES.
		-	-	-	-	-	-	-	-	-	-	-	-	-		-	-	CEILING PLAN	WARM SHELL SPACE.
HS 142	OFFICE	CARPET	-	FF	CPT-1	RUBBER	4"	FF	RB-1	GYPSUM BOARD	-	PE	-	ACOUSTICAL PANEL		FF	ACP-1	SEE REFLECTED	-
		-	-	-	-	-	-	-	-	-	-	-	-	-		-	-	CEILING PLAN	-
HS 143	MECHANICAL / PLUMBING ROOM	CONCRETE	-	FF	SLR	RUBBER	4"	FF	RB-1	GYPSUM BOARD	-	PSG	-	UOS		-	-	SEE REFLECTED	-
		-	-	-	-	-	-	-	-	-	-	-	-	-		-	-	CEILING PLAN	-
HS 145	GEOLOGY FIELD EQUIPMENT STORAGE	CONCRETE	-	FF	SLR	RUBBER	4"	FF	RB-1	GYPSUM BOARD	-	PSG	-	GYPSUM BOARD		PSG	-	SEE REFLECTED	THIS IS A WET SPACE WHERE DIG
		-	-	-	-	-	-	-	-	-	-	-	-	-		-	-	CEILING PLAN	EQUIPMENT IS HOSED DOWN.
HS 146	CAFE / DINING	PORCELAIN CERAMIC TILE	-	UP	PCT-1	PORCELAIN CERAMIC TILE	2"	UP	PCT-7	GYPSUM BOARD	-	PE	-	ACOUSTICAL PANEL		FF	-	SEE REFLECTED	-
		PORCELAIN CERAMIC TILE	-	UP	PCT-2	GROUT	-	FF	GT-3	-	-	-	-	MTL CLG COVE		FF	-	CEILING PLAN	-
		GROUT	-	FF	GT-3	-	-	-	-	-	-	-	-	SHEET METAL		FF	-	DTL 13/SHT 4.03	-
		-	-	-	-	-	-	-	-	-	-	-	-	GYPSUM BOARD		PSG	-	-	
	△1	TERRAZZO*	-	FF	TERR-4*	TERRAZZO*	4"	FF	TERR-4*	-	-	-	-	-		-	-	-	BID ALTERNATE #7
		-	-	-	-	-	-	-	-	-	-	-	-	-		-	-	-	-
HS 147	ELECTRICAL ROOM	CONCRETE	-	FF	SLR	RUBBER	4"	FF	RB-1	GYPSUM BOARD	-	PE	-	UOS		-	-	SEE REFLECTED	
		-	-	-	-	-	-	-	-	-	-	-	-	-		-	-	CEILING PLAN	-
HS 147A	MACHINE ROOM	CONCRETE	-	FF	SLR	RUBBER	4"	FF	RB-1	GYPSUM BOARD	-	PE	-	GYPSUM BOARD		PSG	-	SEE REFLECTED	-
		-	-	-	-	-	-	-	-	-	-	-	-	-		-	-	CEILING PLAN	-
HS 148	OFFICE	CARPET	-	FF	CPT-1	RUBBER	4"	FF	RB-1	GYPSUM BOARD	-	PE	-	ACOUSTICAL PANEL		FF	ACP-1	SEE REFLECTED	-
		-	-	-	-	-	-	-	-	-	-	-	-	-		-	-	CEILING PLAN	-
HS 149	SERVICE/VESTIBULE	RUBBER	-	FF	RF-5	RUBBER	4"	FF	RB-3	GYPSUM BOARD	-	PE	-	GYPSUM BOARD		PSG	-	SEE REFLECTED	-
		-	-	-	-	-	-	-	-	-	-	-	-	-		-	-	CEILING PLAN	
	△1	TERRAZZO*	-	FF	TERR-3*	TERRAZZO*	4"	FF	TERR-3*	-	-	-	-	-		-	-	-	BID ALTERNATE #7
		-	-	-	-	-	-	-	-	-	-	-	-	-		-	-	-	-
HS 149A	HAZARDOUS WASTE STORAGE	CONCRETE	-	FF	SLR	RUBBER	4"	FF	RB-1	GYPSUM BOARD	-	PSG	-	GYPSUM BOARD		PSG	-	SEE REFLECTED	
		-	-	-	-	-	-	-	-	-	-	-	-	-		-	-	CEILING PLAN	-
HS 150	OFFICE	CARPET	-	FF	CPT-1	RUBBER	4"	FF	RB-1	GYPSUM BOARD	-	PE	-	ACOUSTICAL PANEL		FF	ACP-1	SEE REFLECTED	-
		-	-	-	-	-	-	-	-	-	-	-	-	-		-	-	CEILING PLAN	-
HS 151	GENERAL BIOLOGY LAB	CHT	-	FF	CHT-1 (RF-1*)	RUBBER	4"	FF	RB-5	GYPSUM BOARD	-	PE	-	ACOUSTICAL PANEL		FF	ACP-1	SEE REFLECTED	-
		-	-	-	-	-	-	-	-	-	-	-	-	GYPSUM BOARD		PE	-	CEILING PLAN	-
HS 152	OFFICE	CARPET	-	FF	CPT-1	RUBBER	4"	FF	RB-1	GYPSUM BOARD	-	PE	-	ACOUSTICAL PANEL		FF	ACP-1	SEE REFLECTED	-
		-	-	-	-	-	-	-	-	-	-	-	-	-		-	-	CEILING PLAN	-
HS 153	MAJORS BIOLOGY LAB	CHT	-	FF	CHT-1 (RF-1*)	RUBBER	4"	FF	RB-5	GYPSUM BOARD	-	PE	-	ACOUSTICAL PANEL		FF	ACP-1	SEE REFLECTED	-
		-	-	-	-	-	-	-	-	-	-	-	-	GYPSUM BOARD		PE	-	CEILING PLAN	-
HS 153A	MAJORS BIOLOGY PREP	CHT	-	FF	CHT-1 (RF-1*)	RUBBER	4"	FF	RB-5	GYPSUM BOARD	-	PE	-	ACOUSTICAL PANEL		FF	ACP-1	SEE REFLECTED	-
		-	-	-	-	-	-	-	-	-	-	-	-	GYPSUM BOARD		PE	-	CEILING PLAN	-
HS 154	OFFICE	CARPET	-	FF	CPT-1	RUBBER	4"	FF	RB-1	GYPSUM BOARD	-	PE	-	ACOUSTICAL PANEL		FF	ACP-1	SEE REFLECTED	-
		-	-	-	-	-	-	-	-	-	-	-	-	-		-	-	CEILING PLAN	-
HS 155	NORTH CORRIDOR	RUBBER	-	FF	RF-5	RUBBER	4"	FF	RB-3	GYPSUM BOARD	-	PE	P-10	ACOUSTICAL PANEL		FF	-	SEE REFLECTED	SEE INTER ELEV FOR ACCENT PAINT
		-	-	-	-	-	-	-	-	WALL COVERING	-	-	-	GYPSUM BOARD		PE	-	CEILING PLAN	
	△1 △2	TERRAZZO*	-	FF	TERR-3*	TERRAZZO*	4"	FF	TERR-3*	-	-	-	-	-		-	-	-	BID ALTERNATE #7 BID ALTERNATE #12, SEE INT. ELEVS.
		-	-	-	-	-	-	-	-	WALL COVERING	-	-	FWC-1*	-		-	-	-	
HS 156	OFFICE	CARPET	-	FF	CPT-1	RUBBER	4"	FF	RB-1	GYPSUM BOARD	-	PE	-	ACOUSTICAL PANEL		FF	ACP-1	SEE REFLECTED	
		-	-	-	-	-	-	-	-	-	-	-	-	-		-	-	CEILING PLAN	-
HS 157	MEN'S TOILET ROOM	PORCELAIN CERAMIC TILE	-	UP	PCT-1	PORCELAIN CERAMIC TILE	2"	UP	PCT-7	PORCELAIN CERAMIC TILE	-	PO	PCT-4	GYPSUM BOARD		PSG	P-17	SEE REFLECTED	-
		PORCELAIN CERAMIC TILE	-	UP	PCT-2	GROUT	-	FF	GT-2	PORCELAIN CERAMIC TILE	-	PO	PCT-5	-		-	-	CEILING PLAN	-
		PORCELAIN CERAMIC TILE	-	UP	PCT-3	-	-	-	-	PORCELAIN CERAMIC TILE	-	PO	PCT-6	-		-	-	-	-
		GROUT	-	FF	GT-1	-	-	-	-	PORCELAIN CERAMIC TILE	-	PO	PCT-7	-		-	-	-	-
		-	-	-	-	-	-	-	-	GYPSUM BOARD	-	PSG	P-17	-		-	-	-	-
		-	-	-	-	-	-	-	-	GROUT	-	FF	GT-2	-		-	-	-	-
HS 158	OFFICE	CARPET	-	FF	CPT-1	RUBBER	4"	FF	RB-1	GYPSUM BOARD	-	PE	-	ACOUSTICAL PANEL		FF	ACP-1	SEE REFLECTED	-
		-	-	-	-	-	-	-	-	-	-	-	-	-		-	-	CEILING PLAN	-
HS 159	WOMEN'S TOILET ROOM	PORCELAIN CERAMIC TILE	-	UP	PCT-1	PORCELAIN CERAMIC TILE	2"	UP	PCT-7	PORCELAIN CERAMIC TILE	-	PO	PCT-4	GYPSUM BOARD		PSG	P-17	SEE REFLECTED	-
		PORCELAIN CERAMIC TILE	-	UP	PCT-2	GROUT	-	FF	GT-2	PORCELAIN CERAMIC TILE	-	PO	PCT-5	-		-	-	CEILING PLAN	-
		PORCELAIN CERAMIC TILE	-	UP	PCT-3	-	-	-	-	PORCELAIN CERAMIC TILE	-	PO	PCT-6	-		-	-	-	-
		GROUT	-	FF	GT-1	-	-	-	-	PORCELAIN CERAMIC TILE	-	PO	PCT-7	-		-	-	-	-
		-	-	-	-	-	-	-	-	GYPSUM BOARD	-	PSG	P-17	-		-	-	-	-
		-	-	-	-	-	-	-	-	GROUT	-	FF	GT-2	-		-	-	-	-
HS 160	OFFICE	CARPET	-	FF	CPT-1	RUBBER	4"	FF	RB-1	GYPSUM BOARD	-	PE	-	ACOUSTICAL PANEL		FF	ACP-1	SEE REFLECTED	-
		-	-	-	-	-	-	-	-	-	-	-	-	-		-	-	CEILING PLAN	-
HS 161	CENTRAL BIOLOGY PREP	CHT	-	FF	CHT-1 (RF-1*)	RUBBER	4"	FF	RB-5	GYPSUM BOARD	-	PE	-	ACOUSTICAL PANEL		FF	ACP-1	SEE REFLECTED	-
		-	-	-	-	-	-	-	-	-	-	-	-	GYPSUM BOARD		PE	-	CEILING PLAN	-
HS 161A △2	LAB SERVICE	CARPET	-	FF	CPT-1	RUBBER	4"	FF	RB-1	GYPSUM BOARD	-	PE	-	ACOUSTICAL PANEL		FF	ACP-1	SEE REFLECTED	-
		-	-	-	-	-	-	-	-	-	-	-	-	-		-	-	CEILING PLAN	-
HS 161B	VENTED STORAGE	CHT	-	FF	CHT-1 (RF-1*)	RUBBER	4"	FF	RB-5	GYPSUM BOARD	-	PE	-	GYPSUM BOARD		FF	-	SEE REFLECTED	-
		-	-	-	-	-	-	-	-	-	-	-	-	-		-	-	CEILING PLAN	-
HS 161C △2	LAB SERVICE	CARPET	-	FF	CPT-1	RUBBER	4"	FF	RB-1	GYPSUM BOARD	-	PE	-	ACOUSTICAL PANEL		FF	ACP-1	SEE REFLECTED	-
		-	-	-	-	-	-	-	-	-	-	-	-	-		-	-	CEILING PLAN	-
HS 162	OFFICE	CARPET	-	FF	CPT-1	RUBBER	4"	FF	RB-1	GYPSUM BOARD	-	PE	-	ACOUSTICAL PANEL		FF	ACP-1	SEE REFLECTED	-
		-	-	-	-	-	-	-	-	-	-	-	-	-		-	-	CEILING PLAN	-
HS 163	ELECTRICAL ROOM	CONCRETE	-	FF	SLR	RUBBER	4"	FF	RB-1	GYPSUM BOARD	-	PE	-	GYPSUM BOARD		PE	-	SEE REFLECTED	-
		-	-	-	-	-	-	-	-	-	-	-	-	-		-	-	CEILING PLAN	-
HS 164	OFFICE	CARPET	-	FF	CPT-1	RUBBER	4"	FF	RB-1	GYPSUM BOARD	-	PE	-	ACOUSTICAL PANEL		FF	ACP-1	SEE REFLECTED	-
		-	-	-	-	-	-	-	-	-	-	-	-	-		-	-	CEILING PLAN	-
HS 166	OFFICE	CARPET	-	FF	CPT-1	RUBBER	4"	FF	RB-1	GYPSUM BOARD	-	PE	-	ACOUSTICAL PANEL		FF	ACP-1	SEE REFLECTED	-
		-	-	-	-	-	-	-	-	-	-	-	-	-		-	-	CEILING PLAN	-
HS 167	BIOLOGY / BOTANY LAB	CHT	-	FF	CHT-1 (RF-1*)	RUBBER	4"	FF	RB-5	GYPSUM BOARD	-	PE	-	ACOUSTICAL PANEL		FF	ACP-1	SEE REFLECTED	-
		-	-	-	-	-	-	-	-	-	-	-	-	GYPSUM BOARD		PE	-	CEILING PLAN	-
HS 168	JANITOR CLOSET	CONCRETE	-	FF	SLR	RUBBER	4"	FF	RB-1	GYPSUM BOARD	-	PSG	-	GYPSUM BOARD		PSG	-	SEE REFLECTED	-
		-	-	-	-	-	-	-	-	FRP-1	-	-	-	-		-	-	CEILING PLAN	-
HS 169	MICROBIOLOGY LAB	CHT	-	FF	CHT-1 (RF-1*)	RUBBER	4"	FF	RB-5	GYPSUM BOARD	-	PE	-	ACOUSTICAL PANEL		FF	ACP-1	SEE REFLECTED	-
		-	-	-	-	-	-	-	-	-	-	-	-	GYPSUM BOARD		PE	-	CEILING PLAN	-
HS 169A	MICROBIOLOGY PREP	CHT	-	FF	CHT-1 (RF-1*)	RUBBER	4"	FF	RB-5	GYPSUM BOARD	-	PE	-	ACOUSTICAL PANEL		FF	ACP-1	SEE REFLECTED	-
		-	-	-	-	-	-	-	-	-	-	-	-	GYPSUM BOARD		PE	-	CEILING PLAN	-
HS 169B	REFRIGERATOR/ INCUBATOR RM	CHT	-	FF	CHT-1 (RF-1*)	RUBBER	4"	FF	RB-5	GYPSUM BOARD	-	PE	-	ACOUSTICAL PANEL		FF	ACP-1	SEE REFLECTED	-
		-	-	-	-	-	-	-	-	-	-	-	-	GYPSUM BOARD		PE	-	CEILING PLAN	-
HS 170	IDF ROOM	STATIC DISSIPATIVE	-	FF	SDF-1	RUBBER	4"	FF	RB-1	GYPSUM BOARD	-	PE	-	ACOUSTICAL PANEL		FF	ACP-1	SEE REFLECTED	-
		-	-	-	-	-	-	-	-	-	-	-	-	-		-	-	CEILING PLAN	-
HS 171	PLUMBING ROOM	CONCRETE	-	FF	SLR	RUBBER	4"	FF	RB-1	GYPSUM BOARD	-	PSG	-	UOS		-	-	SEE REFLECTED	-
		-	-	-	-	-	-	-	-	-	-	-	-	-		-	-	CEILING PLAN	-
HS 172	MACHINE ROOM	CONCRETE	-	FF	SLR	RUBBER	4"	FF	RB-1	GYPSUM BOARD	-	PE	-	UOS		-	-	SEE REFLECTED	-
		-	-	-	-	-	-	-	-	-	-	-	-	-		-	-	CEILING PLAN	-
HS 173	CLASSROOM	CARPET	-	FF	CPT-1	RUBBER	4"	FF	RB-1	GYPSUM BOARD	-	PE	-	ACOUSTICAL PANEL		FF	ACP-1	SEE REFLECTED	-
		-	-	-	-	-	-	-	-	-	-	-	-	GYPSUM BOARD		PE	-	CEILING PLAN	-

NOTES

1. ALL INTERIOR FINISHES SHALL COMPLY WITH CBC CHAPTER 8, CFC SECTION 1103.3.3. AND TITLE 19 C.C.R.
2. (P-10) IS THE FIELD COLOR FOR INTERIOR GYPSUM BOARD SURFACES, TYPICAL UNO.
3. REFER TO FINISH PLANS AND INTERIOR ELEVATIONS FOR FLOOR PATTERNS, WALL ACCENT COLORS, AND CEILING ACCENT COLORS.
4. REFER TO WINDOW SCHEDULES FOR GLAZING TYPES AND COLORS.
5. MATERIAL DESIGNATIONS MARKED WITH AN ASTERISK (RF-1*) ARE PART OF A BID ALTERNATE. SEE LIST OF BID ALTERNATES ON SHEET T-4.

ABBREVIATIONS

AC	ASPHALTIC CONCRETE
ACP	ACOUSTICAL CEILING PANEL
ACT	ACOUSTICAL CEILING TILE
ALUM	ALUMINUM
ASC	ARCHITECTURAL SUN CONTROL
AWP	ACOUSTICAL WALL PANEL
BD	BOARD
BR	BRICK
CC	CUSTOM COLOR
CD	COILING DOOR
CG	CORNER GUARD
CGL	CHANNEL GLASS
CHBD	CHALKBOARD
CHT	COMMERICAL HOMOGENEOUS TILE
CMT	CERAMIC MOSAIC TILE
CMU	CONCRETE MASONRY UNIT
CONC	CONCRETE
CPT	CARPET
CT	CERAMIC TILE
CW	CURTAIN WALL
DIR	DIRECTORY
DF	DRINKING FOUNTAIN
EM	ENTRY MATS
EP	EPOXY ENAMEL PAINT
EPXY	EPOXY / RESINOUS FLOORING
EXIST	EXISTING TO REMAIN
EXPSD	EXPOSED
FB	FABRIC
FC	FIBER CEMENT
FEC	FIRE EXTINGUISHER CABINET
FGL	FIBERGLASS
FF	FACTORY FINISH
FFP	FOLDING FABRIC PARTITION
FNC	FENCING
FPP	FOLDING PANEL PARTITION
FRP	FIBERGLASS REINFORCED PANEL
FWC	FABRIC WALL COVERING
GFRC	GLASS FIBER-REINFORCED CONCRETE
GFRG	GLASS FIBER-REINFORCED GYPSUM
GL	GLASS
GMT	GLASS MOSAIC TILE
GT	GROUT
GYP	GYPSUM
HPC	HIGH PERFORMANCE COATING
ICC	INTEGRAL COLOR CONCRETE
ID	IDENTIFYING DEVICES (SIGNS)
LIN	LINOLEUM FLOORING
LKR	LOCKER
LVB	LOUVER BLIND
LVR	LOUVER
LWS	LAMINATE WOOD SURFACING
MAR	MARBLE
MB	MARKERBOARD
MBR	MORTAR FOR BRICK
MCMU	MORTAR FOR CONCRETE MASONRY UNIT
MP	METAL PANEL / ALUMINUM WALL PANEL
MPC	METAL PAN CEILING
MR	METAL ROOFING
MRW	METAL ROOF & WALL CLADDING
MTL	METAL
P	PAINT
PART	PARTITION
PCT	PORCELAIN CERAMIC TILE
PE	PAINT EGGSHELL
PF	PAINT FLAT
PG	PAINT GLOSS
PLAM	PLASTIC LAMINATE
PLAS	PLASTER
PLS	PAINT LOW SHEEN
PMP	PERFORATED METAL PANEL
PNLF	PANEL FABRIC
PNL	PANEL, RESIN PANEL
PO	POLISHED
PR	PLASTIC ROOFING
PREFAB	PRE-FABRICATED
PSG	PAINT SEMI-GLOSS
PSS	PLAYGROUND SAFETY SURFACING
PVDF	POLYVINYLIDENE DIFLUORIDE COATING
QS	QUARTZ SURFACING
QT	QUARRY TILE
RB	RUBBER BASE
RESIL	RESILIENT FLOORING
RF	RUBBER FLOORING
RS	ROLLER SHADE
RST	RESILIENT STAIR TREAD
RTF	RUBBER TILE FLOORING
SCC	SOLID COMPOSITE COUNTERTOP
SDF	STATIC DISSIPATIVE FLOORING
SDT	STATIC DISSIPATIVE TILE
SF	SATIN FINISH
SLR	SEALER
SPF	SOLID POLYMER FABRICATION / RESIN PANEL
SPG	SOLID POLYMER GLAZING
SST	STAINLESS STEEL
SSU	SOLID SURFACE
STN	STAIN
SV	SHEET VINYL
SWF	SPECIALTY WALL FINISH / DECORATIVE PAINT FINISH
TC	TOILET COMPARTMENT
TERR	TERRAZZO
TKBD	TACKBOARD
TVWP	TACKABLE VINYL WALL PANEL
TWP	TACKABLE WALL PANEL
UOS	UNDERSIDE OF STRUCTURE
UOPR	UNDERSIDE OF PLASTIC ROOFING
UP	UNPOLISHED
UPHOL	UPHOLSTERY, UPHOLSTERED SEATING
VCT	VINYL COMPOSITION TILE
VFWC	VINYL FABRIC WALL COVERING
WWF	WELDED WIRE FABRIC or WOVEN WIRE FABRIC/ METAL FABRICATION

tBP
architecture planning interiors management

tBP/Architecture
5455 Wilshire Boulevard, Suite 1200
Los Angeles, CA 90036-4242
ph: 323. 556. 3788 fx: 323. 556. 3799

LICENSED ARCHITECT · TIM C. PAN · No. C26074 · REN 4-30-11 · STATE OF CALIFORNIA

architect

consultant

IDENTIFICATION STAMP
DIV. OF THE STATE ARCHITECT
OFFICE OF REGULATION SERVICES
File No. 19-C11
Appl No. 03-112201
AC ____ FLS ____ SS ____
DATE ____

DSA Los Angeles Basin Regional Office
700 North Alameda Street, Suite 5-500
Los Angeles, California 90012
ph: 213/897-3995 fx: 213/897-3159/0726

agency

ANTELOPE VALLEY COLLEGE
HEALTH & SCIENCE BUILDING
ANTELOPE VALLEY COMMUNITY COLLEGE DISTRICT
3041 WEST AVENUE K
LANCASTER, CA 93536-5426

owner

tBP project number : 20641.00

file name: Dtl-0911.dwg

drawn by: JT, MK checked by: MK

date: JULY 30, 2009 - 100% CD

Rev:	date:	description:
△1	11/16/09	ADDENDUM #1
△2	2/26/10	ADDENDUM #2

THIS DRAWING AND THE DESIGNS, DEPICTIONS, IDEAS AND OTHER INFORMATION CONTAINED HEREIN CONSTITUTE UNPUBLISHED WORK OF tBP/ARCHITECTURE AND SHALL REMAIN THE PROPERTY OF tBP/ARCHITECTURE IN PERPETUITY. NO PART THEREOF SHALL BE REPRODUCED, DISCLOSED, DISTRIBUTED, SOLD, PUBLISHED OR OTHERWISE USED IN ANY WAY WITHOUT THE ADVANCED EXPRESS WRITTEN CONSENT OF tBP/ARCHITECTURE.

drawing title:
FINISH SCHEDULE
FIRST FLOOR

drawing no.:
9.11 △1
drawing of

FINISH SCHEDULE

STAIRS & ELEVATORS

SPACE		FLOOR				BASE				WALLS				CEILING					REMARKS
NO.	NAME	MATERIAL	TYPE	FINISH	COLOR	MATERIAL	HEIGHT	FINISH	COLOR	MATERIAL	TYPE	FINISH	COLOR	MATERIAL	TYPE	FINISH	COLOR	HEIGHT	
1	STAIR #1	RUBBER	-	FF	RF-5	RUBBER	4"	FF	RB-3	GYPSUM BOARD	-	PE	-	GYPSUM BOARD		PE	-	SEE REFLECTED	-
		RUBBER TREAD	-	FF	RF-6		-	-	-	-	-	-	-	-		-	-	CEILING PLAN	
	1	TERRAZZO*	-	FF	TERR-2*	TERRAZZO*	4"	FF	TERR-2*	-	-	-	-	-		-	-	-	BID ALTERNATE #7
		-	-	-	-	-	-	-	-	-	-	-	-	-		-	-	-	-
1	ELEVATOR #1	RUBBER	-	FF	RF-5	RUBBER	4"	FF	RB-3	PLASTIC LAMINATE	-	FF	PLAM-13	STAINLESS STEEL		FF	-	-	REFER TO SPEC SECTION 14240
		-	-	-	-	-	-	-	-	ST. STEEL (REVEALS)	-	FF	-	-		-	-	-	
	1	TERRAZZO*	-	FF	TERR-3*	TERRAZZO*	4"	FF	TERR-3*	-	-	-	-	-		- 2	-	-	BID ALTERNATE #7
		-	-	-	-	-	-	-	-	-	-	-	-	-		-	-	-	-
2	STAIR #2	RUBBER	-	FF	RF-5	RUBBER	4"	FF	RB-3	GYPSUM BOARD	-	PE	-	GYPSUM BOARD		PE	-	SEE REFLECTED	
		RUBBER TREAD	-	FF	RF-6	-	-	-	-	-	-	-	-	-		-	-	CEILING PLAN	-
2	ELEVATOR #2	RUBBER	-	FF	RF-5	RUBBER	4"	FF	RB-3	PLASTIC LAMINATE	-	-	PLAM-13	STAINLESS STEEL		FF	-	-	REFER TO SPEC SECTION 14240
		-	-	-	-	-	-	-	-	ST. STEEL (REVEALS)	-	-	-	-		-	-	-	
	1	TERRAZZO*	-	FF	TERR-3*	TERRAZZO*	4"	FF	TERR-3*	-	-	-	-	-		- 2	-	-	BID ALTERNATE #7
		-	-	-	-	-	-	-	-	-	-	-	-	-		-	-	-	-
3	STAIR #3	RUBBER	-	FF	RF-5	RUBBER	4"	FF	RB-3	GYPSUM BOARD	-	PE	-	GYPSUM BOARD		PE	-	SEE REFLECTED	
		RUBBER TREAD	-	FF	RF-6	-	-	-	-	-	-	-	-	-		-	-	CEILING PLAN	
	1	TERRAZZO*	-	FF	TERR-2*	TERRAZZO*	4"	FF	TERR-2*	-	-	-	-	-		-	-	-	BID ALTERNATE #7
		-	-	-	-	-	-	-	-	-	-	-	-	-		-	-	-	-
3	ELEVATOR #3	RUBBER	-	FF	RF-5	RUBBER	4"	FF	RB-3	PLASTIC LAMINATE	-	FF	PLAM-13	STAINLESS STEEL		FF	-	-	REFER TO SPEC SECTION 14240
		-	-	-	-	-	-	-	-	ST. STEEL (REVEALS)	-	-	-	-		-	-	-	
	1	TERRAZZO*	-	FF	TERR-3*	TERRAZZO*	4"	FF	TERR-3*	-	-	-	-	-		- 2	-	-	BID ALTERNATE #7
		-	-	-	-	-	-	-	-	-	-	-	-	-		-	-	-	-
4	STAIR #4	LITHOCRETE	-	FF	CONC-1	CONCRETE	-	-	-	-	-	-	-	-		-	-	-	EXTERIOR STAIR
		-	-	-	-	-	-	-	-	-	-	-	-	-		-	-	-	TERR-2 = BID ALTERNATE

FINISH SCHEDULE

FIRST FLOOR

SPACE		FLOOR				BASE				WALLS				CEILING					REMARKS
NO.	NAME	MATERIAL	TYPE	FINISH	COLOR	MATERIAL	HEIGHT	FINISH	COLOR	MATERIAL	TYPE	FINISH	COLOR	MATERIAL	TYPE	FINISH	COLOR	HEIGHT	
HS 174	MEN'S TOILET ROOM	PORCELAIN CERAMIC TILE	-	UP	PCT-1	PORCELAIN CERAMIC TILE	2"	UP	PCT-7	PORCELAIN CERAMIC TILE	-	PO	PCT-4	GYPSUM BOARD		PSG	P-17	SEE REFLECTED	-
		PORCELAIN CERAMIC TILE	-	UP	PCT-2	GROUT	-	FF	GT-2	PORCELAIN CERAMIC TILE	-	PO	PCT-5	-		-	-	CEILING PLAN	-
		PORCELAIN CERAMIC TILE	-	UP	PCT-3	-	-	-	-	PORCELAIN CERAMIC TILE	-	PO	PCT-6	-		-	-	-	-
		GROUT	-	FF	GT-1	-	-	-	-	PORCELAIN CERAMIC TILE	-	PO	PCT-7	-		-	-	-	-
		-	-	-	-	-	-	-	-	GYPSUM BOARD	-	PSG	P-17	-		-	-	-	-
		-	-	-	-	-	-	-	-	GROUT	-	FF	GT-2	-		-	-	-	-
HS 175	EAST LOBBY	RUBBER	-	FF	RF-5	RUBBER	4"	FF	RB-3	GYPSUM BOARD	-	-	-	GYPSUM BOARD		-	-	SEE REFLECTED	-
		-	-	-	-	-	-	-	-	-	-	-	-	-		-	-	CEILING PLAN	
	1	TERRAZZO*	-	FF	TERR-3*	TERRAZZO*	4"	FF	TERR-3*	-	-	-	-	-		-	-	-	BID ALTERNATE #7
		-	-	-	-	-	-	-	-	-	-	-	-	-		-	-	-	-
HS 176	WOMEN'S TOILET ROOM	PORCELAIN CERAMIC TILE	-	UP	PCT-1	PORCELAIN CERAMIC TILE	2"	UP	PCT-7	PORCELAIN CERAMIC TILE	-	PO	PCT-4	GYPSUM BOARD		PSG	P-17	SEE REFLECTED	
		PORCELAIN CERAMIC TILE	-	UP	PCT-2	GROUT	-	FF	GT-2	PORCELAIN CERAMIC TILE	-	PO	PCT-5	-		-	-	CEILING PLAN	-
		PORCELAIN CERAMIC TILE	-	UP	PCT-3	-	-	-	-	PORCELAIN CERAMIC TILE	-	PO	PCT-6	-		-	-	-	-
		GROUT	-	FF	GT-1	-	-	-	-	PORCELAIN CERAMIC TILE	-	PO	PCT-7	-		-	-	-	-
		-	-	-	-	-	-	-	-	GYPSUM BOARD	-	PSG	P-17	-		-	-	-	-
		-	-	-	-	-	-	-	-	GROUT	-	FF	GT-2	-		-	-	-	-
HS 177	10 PERSON MEETING ROOM	CARPET	-	FF	CPT-3	RUBBER	4"	FF	RB-2	GYPSUM BOARD	-	PE	P-10	ACOUSTICAL PANEL		FF	ACP-1	SEE REFLECTED	-
		-	-	-	-	-	-	-	-	-	-	-	-	-		-	-	CEILING PLAN	-
HS 178	PLANETARIUM STORAGE	STATIC DISSIPATIVE	-	FF	SDF-1	RUBBER	4"	FF	RB-1	GYPSUM BOARD	-	PE	-	ACOUSTICAL PANEL		FF	ACP-1	SEE REFLECTED	-
		-	-	-	-	-	-	-	-	-	-	-	-	-		-	-	CEILING PLAN	-
HS 179	PLANETARIUM WEST HALL	TERRAZZO	-	FF	TERR-1	TERRAZZO	4"	FF	TERR-1	GYPSUM BOARD	-	PE	-	GYPSUM BOARD		PE	-	SEE REFLECTED	
		-	-	-	-	-	-	-	-	SPECIALTY WALL FINISH	-	-	SWF-1	-		-	-	CEILING PLAN	SWF TO A HEIGHT OF 42" A.F.F.
		-	-	-	-	-	-	-	-	WALL COVERING	-	-	FWC-3*	-		-	-	-	BID ALTERNATE #12
		-	-	-	-	-	-	-	-	-	-	-	-	-		-	-	-	FULL HEIGHT WALL COVERING
HS 180	SCIENCE STORAGE	CHT	-	FF	CHT-1	RUBBER	4"	FF	RB-2	GYPSUM BOARD	-	PE	-	ACOUSTICAL PANEL		FF	ACP-1	SEE REFLECTED	
		-	-	-	-	-	-	-	-	-	-	-	-	-		-	-	CEILING PLAN	
HS 181	PLANETARIUM	-	-	-	CPT-2	RUBBER	4"	FF	RB-2	GYPSUM BOARD	-	PE	P-2	PRE-FAB MTL. DOME		FF	-	SEE REFLECTED	AT ATTIC SPACE ABOVE DOME
		-	-	-	-	-	-	-	-	-	-	-	-	-		-	-	CEILING PLAN	COVER ALL WALLS & CEILING WITH BLACK
	ATTIC SPACE ABOVE DOME	-	-	-	-	-	-	-	-	GYPSUM BOARD	-	-	-	U.O.S.		-	-	U.O.S.	ACOUSTIC PANELS, PAINT ANY REMAINING
		-	-	-	-	-	-	-	-	ACOUSTIC INSUL. PANELS	-	FF	FL. BLACK	ACOUST. INSUL. PANELS		FF	FL. BLACK	-	EXPOSED SURFACES & METAL WORK
		-	-	-	-	-	-	-	-	-	-	-	-	-		-	-	-	FLAT BLACK
		-	-	-	-	-	-	-	-	-	-	-	-	-		-	-	-	SEE SPEC SECTION 09820
HS 181A	VESTIBULE	CARPET	-	FF	CPT-2	RUBBER	4"	FF	RB-2	GYPSUM BOARD	-	PE	-	GYPSUM BOARD		PE	-	SEE REFLECTED	
		-	-	-	-	-	-	-	-	-	-	-	-	-		-	-	CEILING PLAN	-
HS 181B	VESTIBULE	CARPET	-	FF	CPT-2	RUBBER	4"	FF	RB-2	GYPSUM BOARD	-	PE	-	GYPSUM BOARD		PE	-	SEE REFLECTED	-
		-	-	-	-	-	-	-	-	-	-	-	-	-		-	-	CEILING PLAN	-
HS 182	DEAN'S OFFICE	CARPET	-	FF	CPT-3	RUBBER	4"	FF	RB-2	GYPSUM BOARD	-	PE	-	ACOUSTICAL PANEL		FF	ACP-1	SEE REFLECTED	-
		-	-	-	-	-	-	-	-	-	-	-	-	-		-	-	CEILING PLAN	-
HS 183	PLANETARIUM EAST HALL	TERRAZZO	-	FF	TERR-1	TERRAZZO	4"	FF	TERR-1	GYPSUM BOARD	-	PE	-	GYPSUM BOARD		PE	-	SEE REFLECTED	
		-	-	-	-	-	-	-	-	SPECIALTY WALL FINISH	-	-	SWF-1	-		-	-	CEILING PLAN	SWF TO A HEIGHT OF 42" A.F.F.
		-	-	-	-	-	-	-	-	WALL COVERING	-	-	FWC-3*	-		-	-	-	BID ALTERNATE #12
		-	-	-	-	-	-	-	-	-	-	-	-	-		-	-	-	FULL HEIGHT WALL COVERING
HS 184	ADMINISTRATIVE ASST OFFICE	CARPET	-	FF	CPT-3	RUBBER	4"	FF	RB-2	GYPSUM BOARD	-	PE	-	ACOUSTICAL PANEL		FF	ACP-1	SEE REFLECTED	
		-	-	-	-	-	-	-	-	-	-	-	-	-		-	-	CEILING PLAN	-
HS 186	MEETING ROOM / WORKROOM	CHT	-	FF	CHT-1	RUBBER	4"	FF	RB-2	GYPSUM BOARD	-	PE	-	ACOUSTICAL PANEL		FF	ACP-1	SEE REFLECTED	-
		-	-	-	-	-	-	-	-	-	-	-	-	-		-	-	CEILING PLAN	-
HS 188	ADMINISTRATIVE ASST OFFICE	CARPET	-	FF	CPT-3	RUBBER	4"	FF	RB-2	GYPSUM BOARD	-	PE	-	ACOUSTICAL PANEL		FF	ACP-1	SEE REFLECTED	-
		-	-	-	-	-	-	-	-	-	-	-	-	-		-	-	CEILING PLAN	-
HS 190	DEAN'S OFFICE	CARPET	-	FF	CPT-3	1 RUBBER	4"	FF	RB-2	GYPSUM BOARD	-	PE	-	ACOUSTICAL PANEL		FF	ACP-1	SEE REFLECTED	-
		-	-	-	-	-	-	-	-	-	-	-	-	-		-	-	CEILING PLAN	-
HS 192	HEALTH STORAGE	CHT	-	FF	CHT-2	RUBBER	4"	FF	RB-2	GYPSUM BOARD	-	PE	-	ACOUSTICAL PANEL		FF	ACP-1	SEE REFLECTED	-
		-	-	-	-	-	-	-	-	-	-	-	-	-		-	-	CEILING PLAN	-
HS 194	15 PERSON MEETING ROOM	CARPET	-	FF	CPT-3	RUBBER	4"	FF	RB-2	GYPSUM BOARD	-	PE	P-10	ACOUSTICAL PANEL		FF	ACP-1	SEE REFLECTED	-
		-	-	-	-	-	-	-	-	-	-	-	-	-		-	-	CEILING PLAN	-
HS 196	MAIL / COPY ROOM	CHT	-	FF	CHT-1	RUBBER	4"	FF	RB-2	GYPSUM BOARD	-	PE	-	GYPSUM BOARD		PE	-	SEE REFLECTED	-
		-	-	-	-	-	-	-	-	-	-	-	-	-		-	-	CEILING PLAN	-
HS 198	RECEPTION / WAITING	CARPET	-	FF	CPT-3	RUBBER	4"	FF	RB-2	GYPSUM BOARD	-	PE	-	ACOUSTICAL PANEL		FF	-	SEE REFLECTED	-
		-	-	-	-	-	-	-	-	-	-	-	-	GYPSUM BOARD		PE	-	CEILING PLAN	-

NOTES

1. ALL INTERIOR FINISHES SHALL COMPLY WITH CBC CHAPTER 8, CFC SECTION 1103.3.3. AND TITLE 19 C.C.R.
2. (P-10) IS THE FIELD COLOR FOR INTERIOR GYPSUM BOARD SURFACES, TYPICAL UNO.
3. REFER TO FINISH PLANS AND INTERIOR ELEVATIONS FOR FLOOR PATTERNS, WALL ACCENT COLORS, AND CEILING ACCENT COLORS.
4. REFER TO WINDOW SCHEDULES FOR GLAZING TYPES AND COLORS.
5. MATERIAL DESIGNATIONS MARKED WITH AN ASTERISK (RF-1*) ARE PART OF A BID ALTERNATE. SEE LIST OF BID ALTERNATES ON SHEET T-4.

ABBREVIATIONS

AC	ASPHALTIC CONCRETE
ACP	ACOUSTICAL CEILING PANEL
ACT	ACOUSTICAL CEILING TILE
ALUM	ALUMINUM
ASC	ARCHITECTURAL SUN CONTROL
AWP	ACOUSTICAL WALL PANEL
BD	BOARD
BR	BRICK
CC	CUSTOM COLOR
CD	COILING DOOR
CG	CORNER GUARD
CGL	CHANNEL GLASS
CHBD	CHALKBOARD
CHT	COMMERICAL HOMOGENEOUS TILE
CMT	CERAMIC MOSAIC TILE
CMU	CONCRETE MASONRY UNIT
CONC	CONCRETE
CPT	CARPET
CT	CERAMIC TILE
CW	CURTAIN WALL
DIR	DIRECTORY
DF	DRINKING FOUNTAIN
EM	ENTRY MATS
EP	EPOXY ENAMEL PAINT
EPXY	EPOXY / RESINOUS FLOORING
EXIST	EXISTING TO REMAIN
EXPSD	EXPOSED
FB	FABRIC
FC	FIBER CEMENT
FEC	FIRE EXTINGUISHER CABINET
FGL	FIBERGLASS
FF	FACTORY FINISH
FFP	FOLDING FABRIC PARTITION
FNC	FENCING
FPP	FOLDING PANEL PARTITION
FRP	FIBERGLASS REINFORCED PANEL
FWC	FABRIC WALL COVERING
GFRC	GLASS FIBER-REINFORCED CONCRETE
GFRG	GLASS FIBER-REINFORCED GYPSUM
GL	GLASS
GMT	GLASS MOSAIC TILE
GT	GROUT
GYP	GYPSUM
HPC	HIGH PERFORMANCE COATING
ICC	INTEGRAL COLOR CONCRETE
ID	IDENTIFYING DEVICES (SIGNS)
LIN	LINOLEUM FLOORING
LKR	LOCKER
LVB	LOUVER BLIND
LVR	LOUVER
LWS	LAMINATE WOOD SURFACING
MAR	MARBLE
MB	MARKERBOARD
MBR	MORTAR FOR BRICK
MCMU	MORTAR FOR CONCRETE MASONRY UNIT
MP	METAL PANEL / ALUMINUM WALL PANEL
MPC	METAL PAN CEILING
MR	METAL ROOFING
MRW	METAL ROOF & WALL CLADDING
MTL	METAL
P	PAINT
PART	PARTITION
PCT	PORCELAIN CERAMIC TILE
PE	PAINT EGGSHELL
PF	PAINT FLAT
PG	PAINT GLOSS
PLAM	PLASTIC LAMINATE
PLAS	PLASTER
PLS	PAINT LOW SHEEN
PMP	PERFORATED METAL PANEL
PNLF	PANEL FABRIC
PNL	PANEL, RESIN PANEL
PO	POLISHED
PR	PLASTIC ROOFING
PREFAB	PRE-FABRICATED
PSG	PAINT SEMI-GLOSS
PSS	PLAYGROUND SAFETY SURFACING
PVDF	POLYVINYLIDENE DIFLUORIDE COATING
QS	QUARTZ SURFACING
QT	QUARRY TILE
RB	RUBBER BASE
RESIL	RESILIENT FLOORING
RF	RUBBER FLOORING
RS	ROLLER SHADE
RST	RESILIENT STAIR TREAD
RTF	RUBBER TILE FLOORING
SCC	SOLID COMPOSITE COUNTERTOP
SDF	STATIC DISSIPATIVE FLOORING
SDT	STATIC DISSIPATIVE TILE
SF	SATIN FINISH
SLR	SEALER
SPF	SOLID POLYMER FABRICATION / RESIN PANEL
SPG	SOLID POLYMER GLAZING
SST	STAINLESS STEEL
SSU	SOLID SURFACE
STN	STAIN
SV	SHEET VINYL
SWF	SPECIALTY WALL FINISH / DECORATIVE PAINT FINISH
TC	TOILET COMPARTMENT
TERR	TERRAZZO
TKBD	TACKBOARD
TVWP	TACKABLE VINYL WALL PANEL
TWP	TACKABLE WALL PANEL
UOS	UNDERSIDE OF STRUCTURE
UOPR	UNDERSIDE OF PLASTIC ROOFING
UP	UNPOLISHED
UPHOL	UPHOLSTERY, UPHOLSTERED SEATING
VCT	VINYL COMPOSITION TILE
VFWC	VINYL FABRIC WALL COVERING
WWF	WELDED WIRE FABRIC or WOVEN WIRE FABRIC/ METAL FABRICATION

tBP
architecture
planning
interiors
management

tBP/Architecture
5455 Wilshire Boulevard, Suite 1200
Los Angeles, CA 90036-4242
ph: 323. 556. 3788 fx: 323. 556. 3799

LICENSED ARCHITECT
W. C. PAN, AIA
NO. C26074
REN. 4-30-11
STATE OF CALIFORNIA

architect

consultant

IDENTIFICATION STAMP
DIV. OF THE STATE ARCHITECT
OFFICE OF REGULATION SERVICES
File No. 19-C11
Appl No. 03-112201
AC ____ FLS ____ SS ____
DATE ____

DSA Los Angeles Basin Regional Office
700 North Alameda Street, Suite 5-500
Los Angeles, California 90012
ph: 213/897-3995 fx: 213/897-3159/0726

agency

ANTELOPE VALLEY COLLEGE
HEALTH & SCIENCE BUILDING
ANTELOPE VALLEY COMMUNITY COLLEGE DISTRICT
3041 WEST AVENUE K
LANCASTER, CA 93536-5426

owner

tBP project number : 20641.00

file name: Dtl-0912.dwg

drawn by: JT, MK checked by: MK

date: JULY 30, 2009 - 100% CD

Rev:	date:	description:
1	11/16/09	ADDENDUM #1
2	2/26/10	ADDENDUM #2

THIS DRAWING AND THE DESIGNS, DEPICTIONS, IDEAS AND OTHER INFORMATION CONTAINED HEREIN CONSTITUTE UNPUBLISHED WORK OF tBP/ARCHITECTURE AND SHALL REMAIN THE PROPERTY OF tBP/ARCHITECTURE IN PERPETUITY. NO PART THEREOF SHALL BE REPRODUCED, DISCLOSED, DISTRIBUTED, SOLD, PUBLISHED OR OTHERWISE USED IN ANY WAY WITHOUT THE ADVANCED EXPRESS WRITTEN CONSENT OF tBP/ARCHITECTURE.

drawing title:
FINISH SCHEDULE
FIRST FLOOR

drawing no.:
9.12
drawing of

FINISH SCHEDULE

SECOND FLOOR

SPACE		FLOOR				BASE				WALLS				CEILING					REMARKS
NO.	NAME	MATERIAL	TYPE	FINISH	COLOR	MATERIAL	HEIGHT	FINISH	COLOR	MATERIAL	TYPE	FINISH	COLOR	MATERIAL	TYPE	FINISH	COLOR	HEIGHT	
HS 200	OFFICE	CARPET	-	FF	CPT-1	RUBBER	4"	FF	RB-1	GYPSUM BOARD	-	PE	-	ACOUSTICAL PANEL	○	FF	ACP-1	SEE REFLECTED	-
		-	-	-	-	-	-	-	-	-	-	-	-	-	○	-	-	CEILING PLAN	-
HS 201	LECTURE HALL	CARPET	-	FF	CPT-1	RUBBER	4"	FF	RB-2	GYPSUM BOARD	-	PE	-	ACOUSTICAL PANEL	○	FF	ACP-1	SEE REFLECTED	-
		CHT	-	FF	CHT-1 (RF-1*)	-	-	-	-	ACOUSTICAL PANEL	-	FF	AWP-2	GYPSUM BOARD	○	PE	-	CEILING PLAN	-
		CHT	-	FF	CHT-4 (RF-4*)	-	-	-	-	-	-	-	-	△2 -	○	-	-	-	-
		-	-	-	-	-	-	-	-	-	-	-	-	-	○	-	-	-	-
HS 202	OFFICE	CARPET	-	FF	CPT-1	RUBBER	4"	FF	RB-1	GYPSUM BOARD	-	PE	-	ACOUSTICAL PANEL	○	FF	ACP-1	SEE REFLECTED	-
		-	-	-	-	-	-	-	-	-	-	-	-	-	○	-	-	CEILING PLAN	-
HS 203	SOUTH CORRIDOR	RUBBER	-	FF	RF-5	RUBBER	4"	FF	RB-3	GYPSUM BOARD	-	PE	-	ACOUSTICAL PANEL	○	FF	ACP-3	SEE REFLECTED	-
		-	-	-	-	-	-	-	-	~~WALL COVERING~~	-	~~FF~~	-	~~GYPSUM BOARD~~	○	~~PE~~	-	~~CEILING PLAN~~	
	△1 △2	TERRAZZO*	-	FF	TERR-3*	TERRAZZO*	4"	FF	TERR-3*	-	-	-	-	-	○	-	-	-	BID ALTERNATE #7
		-	-	-	-	-	-	-	-	WALL COVERING	-	-	FWC-1*	-	○	-	-	-	BID ALTERNATE #12, SEE INT. ELEVS.
HS 204	OFFICE	~~CARPET~~	-	~~FF~~	~~CPT-1~~	~~RUBBER~~	~~4"~~	~~FF~~	~~RB-1~~	~~GYPSUM BOARD~~	-	~~PE~~	-	~~ACOUSTICAL PANEL~~	○	~~FF~~	~~ACP-1~~	~~SEE REFLECTED~~	
		-	-	-	-	-	-	-	-	-	-	-	-	-	○	-	-	CEILING PLAN	-
HS 205	NURSING SKILLS LAB LVN BEDS	CHT	-	FF	CHT-1 (RF-1*)	RUBBER	4"	FF	RB-5	GYPSUM BOARD	-	PE	-	ACOUSTICAL PANEL	○	FF	ACP-1	SEE REFLECTED	-
		CHT	-	FF	CHT-2 (RF-2*)	-	-	-	-	-	-	-	-	GYPSUM BOARD	○	PE	-	CEILING PLAN	-
		CHT	-	FF	CHT-3 (RF-3*)	-	-	-	-	-	-	-	-	-	○	-	-	-	-
		-	-	-	-	-	-	-	-	-	-	-	-	-	○	-	-	-	-
HS 206	OFFICE	CARPET	-	FF	CPT-1	RUBBER	4"	FF	RB-1	GYPSUM BOARD	-	PE	-	ACOUSTICAL PANEL	○	FF	ACP-1	SEE REFLECTED	-
		-	-	-	-	-	-	-	-	-	-	-	-	-	○	-	-	CEILING PLAN	-
HS 207	NURSING SKILLS LAB RN BEDS	CHT	-	FF	CHT-1 (RF-1*)	RUBBER	4"	FF	RB-5	GYPSUM BOARD	-	PE	-	ACOUSTICAL PANEL	○	FF	ACP-1	SEE REFLECTED	-
		CHT	-	FF	CHT-2 (RF-2*)	-	-	-	-	-	-	-	-	GYPSUM BOARD	○	PE	-	CEILING PLAN	-
		CHT	-	FF	CHT-3 (RF-3*)	-	-	-	-	-	-	-	-	-	○	-	-	-	-
		-	-	-	-	-	-	-	-	-	-	-	-	-	○	-	-	-	-
HS 208	OFFICE	CARPET	-	FF	CPT-1	RUBBER	4"	FF	RB-1	GYPSUM BOARD	-	PE	-	ACOUSTICAL PANEL	○	FF	APC-1	SEE REFLECTED	-
		-	-	-	-	-	-	-	-	-	-	-	-	-	○	-	-	CEILING PLAN	-
HS 209	NURSING SKILLS LAB RN BEDS	CHT	-	FF	CHT-1 (RF-1*)	RUBBER	4"	FF	RB-5	GYPSUM BOARD	-	PE	-	ACOUSTICAL PANEL	○	FF	ACP-1	SEE REFLECTED	-
		CHT	-	FF	CHT-2 (RF-2*)	-	-	-	-	-	-	-	-	GYPSUM BOARD	○	PE	-	CEILING PLAN	-
		CHT	-	FF	CHT-3 (RF-3*)	-	-	-	-	-	-	-	-	-	○	-	-	-	-
		-	-	-	-	-	-	-	-	-	-	-	-	-	○	-	-	-	-
HS 209A	NURSING SKILLS LAB STORAGE	CHT	-	FF	CHT-2 (RF-2*)	RUBBER	4"	FF	RB-5	GYPSUM BOARD	-	PE	P-10	ACOUSTICAL PANEL	○	FF	ACP-1	SEE REFLECTED	-
		-	-	-	CHT-3 (RF-3*)	-	-	-	-	-	-	-	-	-	○	PE	-	CEILING PLAN	-
HS 209B	NURSING LOCKED STORAGE	CHT	-	FF	CHT-2 (RF-2*)	RUBBER	4"	FF	RB-5	GYPSUM BOARD	-	PE	P-10	ACOUSTICAL PANEL	○	FF	ACP-1	SEE REFLECTED	-
		-	-	-	-	-	-	-	-	-	-	-	-	-	○	PE	-	CEILING PLAN	-
HS 210	OFFICE	CARPET	-	FF	CPT-1	RUBBER	4"	FF	RB-1	GYPSUM BOARD	-	PE	-	ACOUSTICAL PANEL	○	FF	ACP-1	SEE REFLECTED	-
		-	-	-	-	-	-	-	-	-	-	-	-	-	○	-	-	CEILING PLAN	-
HS 211	SIMULATION SUITE	CHT	-	FF	CHT-1 (RF-1*)	RUBBER	4"	FF	RB-5	GYPSUM BOARD	-	PE	-	ACOUSTICAL PANEL	○	FF	ACP-1	SEE REFLECTED	-
		-	-	-	CHT-3 (RF-3*)	-	-	-	-	-	-	-	-	GYPSUM BOARD	○	PE	-	CEILING PLAN	-
HS 211A	OB SIMULATION LAB	CHT	-	FF	CHT-1 (RF-1*)	RUBBER	4"	FF	RB-5	GYPSUM BOARD	-	PE	-	ACOUSTICAL PANEL	○	FF	ACP-1	SEE REFLECTED	-
		-	-	-	-	-	-	-	-	-	-	-	-	GYPSUM BOARD	○	PE	-	CEILING PLAN	-
HS 211B	ELECTRICAL CLOSET	CONCRETE	-	FF	SLR	RUBBER	4"	FF	RB-1	GYPSUM BOARD	-	PE	-	UOS	○	-	-	SEE REFLECTED	-
		-	-	-	-	-	-	-	-	-	-	-	-	-	○	-	-	CEILING PLAN	-
HS 211C	TECH OFFICE	CARPET	-	FF	CPT-1	RUBBER	4"	FF	RB-1	GYPSUM BOARD	-	PE	-	ACOUSTICAL PANEL	○	FF	ACP-1	SEE REFLECTED	-
		-	-	-	-	-	-	-	-	-	-	-	-	-	○	-	-	CEILING PLAN	-
HS 211D	CARDIAC/ICU SIMULATION LAB	CHT	-	FF	CHT-1 (RF-1*)	RUBBER	4"	FF	RB-5	GYPSUM BOARD	-	PE	-	ACOUSTICAL PANEL	○	FF	ACP-1	SEE REFLECTED	-
		-	-	-	-	-	-	-	-	-	-	-	-	GYPSUM BOARD	○	PE	-	CEILING PLAN	-
HS 211E	PEDIATRIC SIMULATION LAB	CHT	-	FF	CHT-1 (RF-1*)	RUBBER	4"	FF	RB-5	GYPSUM BOARD	-	PE	-	ACOUSTICAL PANEL	○	FF	ACP-1	SEE REFLECTED	-
		-	-	-	-	-	-	-	-	-	-	-	-	GYPSUM BOARD	○	PE	-	CEILING PLAN	-
HS 211F	SIMULATION PREP / STORAGE	CHT	-	FF	CHT-2 (RF-2*)	RUBBER	4"	FF	RB-5	GYPSUM BOARD	-	PE	-	ACOUSTICAL PANEL	○	FF	ACP-1	SEE REFLECTED	-
		-	-	-	-	-	-	-	-	-	-	-	-	-	○	-	-	CEILING PLAN	-
HS 211G	NURSE STATION	CHT	-	FF	CHT-1 (RF-1*)	RUBBER	4"	FF	RB-5	GYPSUM BOARD	-	PE	-	ACOUSTICAL PANEL	○	FF	ACP-1	SEE REFLECTED	-
		-	-	-	CHT-3 (RF-3*)	-	-	-	-	-	-	-	-	GYPSUM BOARD	○	PE	-	CEILING PLAN	-
HS 212	OFFICE	CARPET	-	FF	CPT-1	RUBBER	4"	FF	RB-1	GYPSUM BOARD	-	PE	-	ACOUSTICAL PANEL	○	FF	ACP-1	SEE REFLECTED	-
		-	-	-	-	-	-	-	-	-	-	-	-	-	○	-	-	CEILING PLAN	-
HS 213	GROUP STUDY ROOM	CHT	-	FF	CHT-2	RUBBER	4"	FF	RB-1	GYPSUM BOARD	-	PE	-	ACOUSTICAL PANEL	○	FF	ACP-1	SEE REFLECTED	-
		-	-	-	CHT-3	-	-	-	-	-	-	-	-	-	○	-	-	CEILING PLAN	-
HS 214	OFFICE	CARPET	-	FF	CPT-1	RUBBER	4"	FF	RB-1	GYPSUM BOARD	-	PE	-	ACOUSTICAL PANEL	○	FF	ACP-1	SEE REFLECTED	-
		-	-	-	-	-	-	-	-	-	-	-	-	-	○	-	-	CEILING PLAN	-
HS 216	JANITOR CLOSET	CONCRETE	-	FF	SLR	RUBBER	4"	FF	RB-1	GYPSUM BOARD	-	PSG	-	GYPSUM BOARD	○	PSG	-	SEE REFLECTED	-
		-	-	-	-	-	-	-	-	FRP-1	-	-	-	-	○	-	-	CEILING PLAN	-
HS 217	CLASSROOM	CARPET	-	FF	CPT-1	RUBBER	4"	FF	RB-1	GYPSUM BOARD	-	PE	-	ACOUSTICAL PANEL	○	FF	ACP-1	SEE REFLECTED	-
		-	-	-	-	-	-	-	-	-	-	-	-	GYPSUM BOARD	○	PE	-	CEILING PLAN	-
HS 218	OFFICE	CARPET	-	FF	CPT-1	RUBBER	4"	FF	RB-1	GYPSUM BOARD	-	PE	-	ACOUSTICAL PANEL	○	FF	ACP-1	SEE REFLECTED	-
		-	-	-	-	-	-	-	-	-	-	-	-	-	○	-	-	CEILING PLAN	-
HS 219	MEN'S TOILET ROOM	PORCELAIN CERAMIC TILE	-	UP	PCT-1	PORCELAIN CERAMIC TILE	2"	UP	PCT-7	PORCELAIN CERAMIC TILE	-	PO	PCT-4	GYPSUM BOARD	○	PSG	P-17	SEE REFLECTED	-
		PORCELAIN CERAMIC TILE	-	UP	PCT-2	GROUT	-	FF	GT-2	PORCELAIN CERAMIC TILE	-	PO	PCT-5	-	○	-	-	CEILING PLAN	-
		PORCELAIN CERAMIC TILE	-	UP	PCT-3	-	-	-	-	PORCELAIN CERAMIC TILE	-	PO	PCT-6	-	○	-	-	-	-
		GROUT	-	FF	GT-1	-	-	-	-	PORCELAIN CERAMIC TILE	-	PO	PCT-7	-	○	-	-	-	-
		-	-	-	-	-	-	-	-	GYPSUM BOARD	-	PSG	P-17	-	○	-	-	-	-
		-	-	-	-	-	-	-	-	GROUT	-	FF	GT-2	-	○	-	-	-	-
HS 220	OFFICE	CARPET	-	FF	CPT-1	RUBBER	4"	FF	RB-1	GYPSUM BOARD	-	PE	-	ACOUSTICAL PANEL	○	FF	ACP-1	SEE REFLECTED	-
		-	-	-	-	-	-	-	-	-	-	-	-	-	○	-	-	CEILING PLAN	-
HS 221	WOMEN'S TOILET ROOM	PORCELAIN CERAMIC TILE	-	UP	PCT-1	PORCELAIN CERAMIC TILE	2"	UP	PCT-7	PORCELAIN CERAMIC TILE	-	PO	PCT-4	GYPSUM BOARD	○	PSG	P-17	SEE REFLECTED	-
		PORCELAIN CERAMIC TILE	-	UP	PCT-2	GROUT	-	FF	GT-2	PORCELAIN CERAMIC TILE	-	PO	PCT-5	-	○	-	-	CEILING PLAN	-
		PORCELAIN CERAMIC TILE	-	UP	PCT-3	-	-	-	-	PORCELAIN CERAMIC TILE	-	PO	PCT-6	-	○	-	-	-	-
		GROUT	-	FF	GT-1	-	-	-	-	PORCELAIN CERAMIC TILE	-	PO	PCT-7	-	○	-	-	-	-
		-	-	-	-	-	-	-	-	GYPSUM BOARD	-	PSG	P-17	-	○	-	-	-	-
		-	-	-	-	-	-	-	-	GROUT	-	FF	GT-2	-	○	-	-	-	-
HS 222	OFFICE	CARPET	-	FF	CPT-1	RUBBER	4"	FF	RB-1	GYPSUM BOARD	-	PE	-	ACOUSTICAL PANEL	○	FF	ACP-1	SEE REFLECTED	-
		-	-	-	-	-	-	-	-	-	-	-	-	-	○	-	-	CEILING PLAN	-
HS 223	ANTHROPOLOGY LAB	CHT	-	FF	CHT-1 (RF-1*)	RUBBER	4"	FF	RB-5	GYPSUM BOARD	-	PE	-	ACOUSTICAL PANEL	○	FF	ACP-1	SEE REFLECTED	-
		-	-	-	-	-	-	-	-	-	-	-	-	GYPSUM BOARD	○	PE	-	CEILING PLAN	-
HS 223A	ANTHROPOLOGY PREP / STOR	CHT	-	FF	CHT-1 (RF-1*)	RUBBER	4"	FF	RB-5	GYPSUM BOARD	-	PE	-	ACOUSTICAL PANEL	○	FF	ACP-1	SEE REFLECTED	-
		-	-	-	-	-	-	-	-	-	-	-	-	GYPSUM BOARD	○	PE	-	CEILING PLAN	-
HS 224	IDF ROOM	STATIC DISSIPATIVE	-	FF	SDF-1	RUBBER	4"	FF	RB-1	GYPSUM BOARD	-	PE	-	ACOUSTICAL PANEL	○	FF	ACP-1	SEE REFLECTED	-
		-	-	-	-	-	-	-	-	-	-	-	-	-	○	-	-	CEILING PLAN	-
HS 225	WEST CORRIDOR	RUBBER	-	FF	RF-5	RUBBER	4"	FF	RB-3	GYPSUM BOARD	-	PE	-	ACOUSTICAL PANEL	○	FF	ACP-4	SEE REFLECTED	-
		-	-	-	-	-	-	-	-	~~WALL COVERING~~	-	~~FF~~	-	~~GYPSUM BOARD~~	○	~~PE~~	-	~~CEILING PLAN~~	
	△1 △2	TERRAZZO*	-	FF	TERR-3*	TERRAZZO*	4"	FF	TERR-3*	-	-	-	-	-	○	-	-	-	BID ALTERNATE #7
		-	-	-	-	-	-	-	-	WALL COVERING	-	-	FWC-1*	-	○	-	-	-	BID ALTERNATE #12, SEE INT. ELEVS.
HS 226	OFFICE	~~CARPET~~	-	~~FF~~	~~CPT-1~~	~~RUBBER~~	~~4"~~	~~FF~~	~~RB-1~~	~~GYPSUM BOARD~~	-	~~PE~~	-	~~ACOUSTICAL PANEL~~	○	~~FF~~	~~ACP-1~~	~~SEE REFLECTED~~	
		-	-	-	-	-	-	-	-	-	-	-	-	-	○	-	-	CEILING PLAN	-
HS 227	GENERAL CHEMISTRY LAB	CHT	-	FF	CHT-1 (RF-1*)	RUBBER	4"	FF	RB-5	GYPSUM BOARD	-	PE	-	ACOUSTICAL PANEL	○	FF	ACP-1	SEE REFLECTED	-
		-	-	-	-	-	-	-	-	-	-	-	-	GYPSUM BOARD	○	PE	-	CEILING PLAN	-
HS 228	OFFICE	CARPET	-	FF	CPT-1	RUBBER	4"	FF	RB-1	GYPSUM BOARD	-	PE	-	ACOUSTICAL PANEL	○	FF	ACP-1	SEE REFLECTED	-
		-	-	-	-	-	-	-	-	-	-	-	-	-	○	-	-	CEILING PLAN	-
HS 229	CHEMISTRY INSTRUMENT ROOM	CHT	-	FF	CHT-1 (RF-1*)	RUBBER	4"	FF	RB-5	GYPSUM BOARD	-	PE	-	ACOUSTICAL PANEL	○	FF	ACP-1	SEE REFLECTED	-
		-	-	-	-	-	-	-	-	-	-	-	-	GYPSUM BOARD	○	PE	-	CEILING PLAN	-
HS 229A	LAB SERVICE	CARPET	-	FF	CPT-1	RUBBER	4"	FF	RB-1	GYPSUM BOARD	-	PE	-	ACOUSTICAL PANEL	○	FF	ACP-1	SEE REFLECTED	-
		-	-	-	-	-	-	-	-	-	-	-	-	-	○	-	-	CEILING PLAN	-
HS 230	OFFICE	CHT	-	FF	CHT-1	RUBBER	4"	FF	RB-1	GYPSUM BOARD	-	PE	-	ACOUSTICAL PANEL	○	FF	ACP-1	SEE REFLECTED	-
		-	-	-	-	-	-	-	-	-	-	-	-	-	○	-	-	CEILING PLAN	-
HS 231	ORGANIC CHEMISTRY LAB	CHT	-	FF	CHT-1 (RF-1*)	RUBBER	4"	FF	RB-5	GYPSUM BOARD	-	PE	-	ACOUSTICAL PANEL	○	FF	ACP-1	SEE REFLECTED	-
		-	-	-	-	-	-	-	-	-	-	-	-	GYPSUM BOARD	○	PE	-	CEILING PLAN	-
HS 232	OFFICE	CARPET	-	FF	CPT-1	RUBBER	4"	FF	RB-1	GYPSUM BOARD	-	PE	-	ACOUSTICAL PANEL	○	FF	ACP-1	SEE REFLECTED	-
		-	-	-	-	-	-	-	-	-	-	-	-	-	○	-	-	CEILING PLAN	-

FINISH SCHEDULE

SECOND FLOOR

SPACE		FLOOR				BASE				WALLS				CEILING					REMARKS
NO.	NAME	MATERIAL	TYPE	FINISH	COLOR	MATERIAL	HEIGHT	FINISH	COLOR	MATERIAL	TYPE	FINISH	COLOR	MATERIAL	TYPE	FINISH	COLOR	HEIGHT	
HS 234	OFFICE	CARPET	-	FF	CPT-1	RUBBER	4"	FF	RB-1	GYPSUM BOARD	-	PE	-	ACOUSTICAL PANEL	○	FF	ACP-1	SEE REFLECTED	-
		-	-	-	-	-	-	-	-	-	-	-	-	-	○	-	-	CEILING PLAN	-
HS 235	VESTIBULE	RUBBER	-	FF	RF-5	RUBBER	4"	FF	RB-3	GYPSUM BOARD	-	PE	-	ACOUSTICAL PANEL	○	FF	ACP-1	SEE REFLECTED	-
		-	-	-	-	-	-	-	-	-	-	-	-	-	○	-	-	~~CEILING PLAN~~	
	△1	TERRAZZO*	-	FF	TERR-3*	TERRAZZO*	4"	FF	TERR-3*	-	-	-	-	-	○	-	-	-	BID ALTERNATE #7
		-	-	-	-	-	-	-	-	-	-	-	-	-	○	-	-	-	-
HS 235A	CHEMISTRY PREP / STORAGE	~~CHT~~	-	~~FF~~	~~CHT-1 (RF-1*)~~	~~RUBBER~~	~~4"~~	~~FF~~	~~RB-5~~	~~GYPSUM BOARD~~	-	~~PE~~	-	~~ACOUSTICAL PANEL~~	○	~~FF~~	~~ACP-1~~	~~SEE REFLECTED~~	
		-	-	-	-	-	-	-	-	-	-	-	-	GYPSUM BOARD	○	PE	-	CEILING PLAN	-
HS 235B	FLAMMABLE CHEMICAL STORAGE	CHT	-	FF	CHT-1 (RF-1*)	RUBBER	4"	FF	RB-5	GYPSUM BOARD	-	PE	-	GYPSUM BOARD	○	PE	-	SEE REFLECTED	-
		-	-	-	-	-	-	-	-	-	-	-	-	-	○	-	-	CEILING PLAN	-
HS 235C	FLAMMABLE CHEMICAL STORAGE	CHT	-	FF	CHT-1 (RF-1*)	RUBBER	4"	FF	RB-5	GYPSUM BOARD	-	PE	-	GYPSUM BOARD	○	PE	-	SEE REFLECTED	-
		-	-	-	-	-	-	-	-	-	-	-	-	-	○	-	-	CEILING PLAN	-
HS 235D	FLAMMABLE CHEMICAL STORAGE	CHT	-	FF	CHT-1 (RF-1*)	RUBBER	4"	FF	RB-5	GYPSUM BOARD	-	PE	-	GYPSUM BOARD	○	PE	-	SEE REFLECTED	-
		-	-	-	-	-	-	-	-	-	-	-	-	-	○	-	-	CEILING PLAN	-
HS 235E	CHEMISTRY STORAGE	CHT	-	FF	CHT-1 (RF-1*)	RUBBER	4"	FF	RB-5	GYPSUM BOARD	-	PE	-	GYPSUM BOARD	○	PE	-	SEE REFLECTED	-
		-	-	-	-	-	-	-	-	-	-	-	-	-	○	-	-	CEILING PLAN	-
HS 236	OFFICE	CARPET	-	FF	CPT-1	RUBBER	4"	FF	RB-1	GYPSUM BOARD	-	PE	-	ACOUSTICAL PANEL	○	FF	ACP-1	SEE REFLECTED	-
		-	-	-	-	-	-	-	-	-	-	-	-	-	○	-	-	CEILING PLAN	-
HS 237	GENERAL CHEMISTRY LAB	CHT	-	FF	CHT-1 (RF-1*)	RUBBER	4"	FF	RB-5	GYPSUM BOARD	-	PE	-	ACOUSTICAL PANEL	○	FF	ACP-1	SEE REFLECTED	-
		-	-	-	-	-	-	-	-	-	-	-	-	GYPSUM BOARD	○	PE	-	CEILING PLAN	-
HS 238	OFFICE	CARPET	-	FF	CPT-1	RUBBER	4"	FF	RB-1	GYPSUM BOARD	-	PE	-	ACOUSTICAL PANEL	○	FF	ACP-1	SEE REFLECTED	-
		-	-	-	-	-	-	-	-	-	-	-	-	-	○	-	-	CEILING PLAN	-
HS 239	PHYSICAL SCIENCE LAB	CHT	-	FF	CHT-1 (RF-1*)	RUBBER	4"	FF	RB-5	GYPSUM BOARD	-	PE	-	ACOUSTICAL PANEL	○	FF	ACP-1	SEE REFLECTED	-
		-	-	-	-	-	-	-	-	-	-	-	-	GYPSUM BOARD	○	PE	-	CEILING PLAN	-
HS 240	OFFICE	CARPET	-	FF	CPT-1	RUBBER	4"	FF	RB-1	GYPSUM BOARD	-	PE	-	ACOUSTICAL PANEL	○	FF	ACP-1	SEE REFLECTED	-
		-	-	-	-	-	-	-	-	-	-	-	-	-	○	-	-	CEILING PLAN	-
HS 241	NORTH CORRIDOR	RUBBER	-	FF	RF-5	RUBBER	4"	FF	RB-3	GYPSUM BOARD	-	PE	-	ACOUSTICAL PANEL	○	FF	-	SEE REFLECTED	-
		-	-	-	-	-	-	-	-	~~WALL COVERING~~	-	~~FF~~	-	~~GYPSUM BOARD~~	○	~~RE~~	-	~~CEILING PLAN~~	
	△1 △2	TERRAZZO*	-	FF	TERR-3*	TERRAZZO*	4"	FF	TERR-3*	-	-	-	-	-	○	-	-	-	BID ALTERNATE #7
		-	-	-	-	-	-	-	-	WALL COVERING	-	-	FCW-1*	-	○	-	-	-	BID ALTERNATE #12, SEE INT. ELEVS.
HS 242	OFFICE	~~CARPET~~	-	~~FF~~	~~CPT-1~~	~~RUBBER~~	~~4"~~	~~FF~~	~~RB-1~~	~~GYPSUM BOARD~~	-	~~PE~~	-	~~ACOUSTICAL PANEL~~	○	~~FF~~	~~ACP-1~~	~~SEE REFLECTED~~	
		-	-	-	-	-	-	-	-	-	-	-	-	-	○	-	-	CEILING PLAN	-
HS 243	PHYSICS & PHYS SCI PREP / STORAGE	CHT	-	FF	CHT-1 (RF-1*)	RUBBER	4"	FF	RB-5	GYPSUM BOARD	-	PE	-	ACOUSTICAL PANEL	○	FF	ACP-1	SEE REFLECTED	-
		-	-	-	-	-	-	-	-	-	-	-	-	-	○	-	-	CEILING PLAN	-
HS 243A	LAB SERVICE	CARPET	-	FF	CPT-1	RUBBER	4"	FF	RB-1	GYPSUM BOARD	-	PE	-	ACOUSTICAL PANEL	○	FF	ACP-1	SEE REFLECTED	-
		-	-	-	-	-	-	-	-	-	-	-	-	-	○	-	-	CEILING PLAN	-
HS 243B	ELECTRICAL ROOM	CONCRETE	-	FF	SLR	RUBBER	4"	FF	RB-1	GYPSUM BOARD	-	PE	-	UOS	○	-	-	SEE REFLECTED	-
		-	-	-	-	-	-	-	-	-	-	-	-	-	○	-	-	CEILING PLAN	-
HS 244	LOUNGE	RUBBER	-	FF	RF-5	RUBBER	4"	FF	RB-3	GYPSUM BOARD	-	PE	-	ACOUSTICAL PANEL	○	FF	ACP-4	SEE REFLECTED	-
		-	-	-	-	-	-	-	-	WALL COVERING	-	FF	-	GYPSUM BOARD	○	PE	-	CEILING PLAN	-
HS 246	OFFICE	CARPET	-	FF	CPT-1	RUBBER	4"	FF	RB-1	GYPSUM BOARD	-	PE	-	ACOUSTICAL PANEL	○	FF	ACP-1	SEE REFLECTED	-
		-	-	-	-	-	-	-	-	-	-	-	-	-	○	-	-	CEILING PLAN	-
HS 247	MEN'S TOILET ROOM	PORCELAIN CERAMIC TILE	-	UP	PCT-1	PORCELAIN CERAMIC TILE	2"	UP	PCT-7	PORCELAIN CERAMIC TILE	-	PO	PCT-4	GYPSUM BOARD	○	PSG	P-17	SEE REFLECTED	-
		PORCELAIN CERAMIC TILE	-	UP	PCT-2	GROUT	-	FF	GT-2	PORCELAIN CERAMIC TILE	-	PO	PCT-5	-	○	-	-	CEILING PLAN	-
		PORCELAIN CERAMIC TILE	-	UP	PCT-3	-	-	-	-	PORCELAIN CERAMIC TILE	-	PO	PCT-6	-	○	-	-	-	-
		GROUT	-	FF	GT-1	-	-	-	-	PORCELAIN CERAMIC TILE	-	PO	PCT-7	-	○	-	-	-	-
		-	-	-	-	-	-	-	-	GYPSUM BOARD	-	PSG	P-17	-	○	-	-	-	-
		-	-	-	-	-	-	-	-	GROUT	-	FF	GT-2	-	○	-	-	-	-
HS 248	OFFICE	CARPET	-	FF	CPT-1	RUBBER	4"	FF	RB-1	GYPSUM BOARD	-	PE	-	ACOUSTICAL PANEL	○	FF	ACP-1	SEE REFLECTED	-
		-	-	-	-	-	-	-	-	-	-	-	-	-	○	-	-	CEILING PLAN	-
HS 249	WOMEN'S TOILET ROOM	PORCELAIN CERAMIC TILE	-	UP	PCT-1	PORCELAIN CERAMIC TILE	2"	UP	PCT-7	PORCELAIN CERAMIC TILE	-	PO	PCT-4	GYPSUM BOARD	○	PSG	P-17	SEE REFLECTED	-
		PORCELAIN CERAMIC TILE	-	UP	PCT-2	GROUT	-	FF	GT-2	PORCELAIN CERAMIC TILE	-	PO	PCT-5	-	○	-	-	CEILING PLAN	-
		PORCELAIN CERAMIC TILE	-	UP	PCT-3	-	-	-	-	PORCELAIN CERAMIC TILE	-	PO	PCT-6	-	○	-	-	-	-
		GROUT	-	FF	GT-1	-	-	-	-	PORCELAIN CERAMIC TILE	-	PO	PCT-7	-	○	-	-	-	-
-		-	-	-	-	-	-	-	-	GYPSUM BOARD	-	PSG	P-17	-	○	-	-	-	-
		-	-	-	-	-	-	-	-	GROUT	-	FF	GT-2	-	○	-	-	-	-
HS 250	OFFICE	CARPET	-	FF	CPT-1	RUBBER	4"	FF	RB-1	GYPSUM BOARD	-	PE	-	ACOUSTICAL PANEL	○	FF	ACP-1	SEE REFLECTED	-
		-	-	-	-	-	-	-	-	-	-	-	-	-	○	-	-	CEILING PLAN	-
HS 251	PHYSICS LAB	CHT	-	FF	CHT-1 (RF-1*)	RUBBER	4"	FF	RB-5	GYPSUM BOARD	-	PE	-	ACOUSTICAL PANEL	○	FF	ACP-1	SEE REFLECTED	-
		-	-	-	-	-	-	-	-	-	-	-	-	GYPSUM BOARD	○	PE	-	CEILING PLAN	-
HS 252	OFFICE	CARPET	-	FF	CPT-1	RUBBER	4"	FF	RB-1	GYPSUM BOARD	-	PE	-	ACOUSTICAL PANEL	○	FF	ACP-1	SEE REFLECTED	-
		-	-	-	-	-	-	-	-	-	-	-	-	-	○	-	-	CEILING PLAN	-
HS 253	GEOGRAPHY / GIS LAB	STATIC DISSIPATIVE	-	FF	SDF-1	RUBBER	4"	FF	RB-1	GYPSUM BOARD	-	PE	-	ACOUSTICAL PANEL	○	FF	ACP-1	SEE REFLECTED	-
		-	-	-	-	-	-	-	-	-	-	-	-	GYPSUM BOARD	○	PE	-	CEILING PLAN	-
HS 254	OFFICE	CARPET	-	FF	CPT-1	RUBBER	4"	FF	RB-1	GYPSUM BOARD	-	PE	-	ACOUSTICAL PANEL	○	FF	ACP-1	SEE REFLECTED	-
		-	-	-	-	-	-	-	-	-	-	-	-	-	○	-	-	CEILING PLAN	-
HS 256	OFFICE	CARPET	-	FF	CPT-1	RUBBER	4"	FF	RB-1	GYPSUM BOARD	-	PE	-	ACOUSTICAL PANEL	○	FF	ACP-1	SEE REFLECTED	-
		-	-	-	-	-	-	-	-	-	-	-	-	-	○	-	-	CEILING PLAN	-
HS 257	GEOLOGY PREP / STORAGE	CHT	-	FF	CHT-1 (RF-1*)	RUBBER	4"	FF	RB-5	GYPSUM BOARD	-	PE	-	ACOUSTICAL PANEL	○	FF	ACP-1	SEE REFLECTED	-
		-	-	-	-	-	-	-	-	-	-	-	-	GYPSUM BOARD	○	PE	-	CEILING PLAN	-
HS 257A	GEOGRAPHY STORAGE / GIS PLOTTER	STATIC DISSIPATIVE	-	FF	SDF-1	RUBBER	4"	FF	RB-1	GYPSUM BOARD	-	PE	-	ACOUSTICAL PANEL	○	FF	ACP-1	SEE REFLECTED	-
		-	-	-	-	-	-	-	-	-	-	-	-	GYPSUM BOARD	○	PE	-	CEILING PLAN	-
HS 258	OFFICE	CARPET	-	FF	CPT-1	RUBBER	4"	FF	RB-1	GYPSUM BOARD	-	PE	-	ACOUSTICAL PANEL	○	FF	ACP-1	SEE REFLECTED	-
		-	-	-	-	-	-	-	-	-	-	-	-	-	○	-	-	CEILING PLAN	-
HS 259	GEOLOGY LAB	CHT	-	FF	CHT-1 (RF-1*)	RUBBER	4"	FF	RB-5	GYPSUM BOARD	-	PE	-	ACOUSTICAL PANEL	○	FF	ACP-1	SEE REFLECTED	-
		-	-	-	-	-	-	-	-	-	-	-	-	GYPSUM BOARD	○	PE	-	CEILING PLAN	-
HS 260	OFFICE	CARPET	-	FF	CPT-1	RUBBER	4"	FF	RB-1	GYPSUM BOARD	-	PE	-	ACOUSTICAL PANEL	○	FF	ACP-1	SEE REFLECTED	-
		-	-	-	-	-	-	-	-	-	-	-	-	-	○	-	-	CEILING PLAN	-
HS 261	CLASSROOM	CARPET	-	FF	CPT-1	RUBBER	4"	FF	RB-1	GYPSUM BOARD	-	PE	-	ACOUSTICAL PANEL	○	FF	ACP-1	SEE REFLECTED	-
		-	-	-	-	-	-	-	-	-	-	-	-	GYPSUM BOARD	○	PE	-	CEILING PLAN	-
HS 262	OFFICE	CARPET	-	FF	CPT-1	RUBBER	4"	FF	RB-1	GYPSUM BOARD	-	PE	-	ACOUSTICAL PANEL	○	FF	ACP-1	SEE REFLECTED	-
		-	-	-	-	-	-	-	-	-	-	-	-	-	○	-	-	CEILING PLAN	-
HS 263	EAST LOBBY	RUBBER	-	FF	RF-5	RUBBER	4"	FF	RB-3	GYPSUM BOARD	-	PE	-	GYPSUM BOARD	○	PE	-	SEE REFLECTED	-
		-	-	-	-	-	-	-	-	~~WALL COVERING~~	-	~~FF~~	-	-	○	-	-	~~CEILING PLAN~~	
	△1	TERRAZZO*	-	FF	TERR-3*	TERRAZZO*	4"	FF	TERR-3*	-	-	-	-	-	○	-	-	-	BID ALTERNATE #7
		-	-	-	-	-	-	-	-	-	-	-	-	-	○	-	-	-	-
HS 264	OFFICE	~~CARPET~~	-	~~FF~~	~~CPT-1~~	~~RUBBER~~	~~4"~~	~~FF~~	~~RB-1~~	~~GYPSUM BOARD~~	-	~~PE~~	-	~~ACOUSTICAL PANEL~~	○	~~FF~~	~~ACP-1~~	~~SEE REFLECTED~~	
		-	-	-	-	-	-	-	-	-	-	-	-	-	○	-	-	CEILING PLAN	-
HS 266	OFFICE	CARPET	-	FF	CPT-1	RUBBER	4"	FF	RB-1	GYPSUM BOARD	-	PE	-	ACOUSTICAL PANEL	○	FF	-	SEE REFLECTED	-
		-	-	-	-	-	-	-	-	-	-	-	-	-	○	-	-	CEILING PLAN	-
HS 267	ASTRONOMY TECH OFFICE	CHT	-	FF	CHT-1	RUBBER	4"	FF	RB-5	GYPSUM BOARD	-	PE	-	ACOUSTICAL PANEL	○	FF	ACP-1	SEE REFLECTED	-
		-	-	-	-	-	-	-	-	-	-	-	-	-	○	-	-	CEILING PLAN	-
HS 267A	ASTRONOMY STORAGE	CHT	-	FF	CHT-1	RUBBER	4"	FF	RB-5	GYPSUM BOARD	-	PE	-	ACOUSTICAL PANEL	○	FF	ACP-1	SEE REFLECTED	-
		-	-	-	-	-	-	-	-	-	-	-	-	-	○	-	-	CEILING PLAN	-
HS 269	OBSERVATION DECK	LITHOCRETE	-	FF	CONC-1	-	-	-	-	-	-	-	-	-	○	-	-	-	-
		-	-	-	-	-	-	-	-	-	-	-	-	-	○	-	-	-	-
HS 270	IDF ROOM	STATIC DISSIPATIVE	-	FF	SDF-1	RUBBER	4"	FF	RB-1	GYPSUM BOARD	-	PE	-	ACOUSTICAL PANEL	○	FF	ACP-1	SEE REFLECTED	-
		-	-	-	-	-	-	-	-	-	-	-	-	-	○	-	-	CEILING PLAN	-
HS 271	BRIDGE	LITHOCRETE	-	FF	CONC-1	-	-	-	-	-	-	-	-	-	○	-	-	-	-
		-	-	-	-	-	-	-	-	-	-	-	-	-	○	-	-	-	-
HS 272	OPEN COMPUTER LAB	CARPET	-	FF	CPT-4	RUBBER	4"	FF	RB-4	GYPSUM BOARD	-	PE	-	ACOUSTICAL PANEL	○	FF	ACP-4	SEE REFLECTED	-
		-	-	-	CPT-5	-	-	-	-	-	-	-	-	GYPSUM BOARD	○	PE	-	CEILING PLAN	-
HS 274	NURSING COMPUTER LAB	CARPET	-	FF	CPT-4	RUBBER	4"	FF	RB-4	GYPSUM BOARD	-	PE	-	ACOUSTICAL PANEL	○	FF	ACP-4	SEE REFLECTED	-
		-	-	-	CPT-5	-	-	-	-	-	-	-	-	GYPSUM BOARD	○	PE	-	CEILING PLAN	-
HS 274A	PRINT STATIONS	CARPET	-	FF	CPT-5	RUBBER	4"	FF	RB-4	GYPSUM BOARD	-	PE	P-10	GYPSUM BOARD	○	PE	-	SEE REFLECTED	-
		-	-	-	-	-	-	-	-	-	-	-	-	-	○	-	-	CEILING PLAN	-
HS 276	TUTORIAL COMPUTER LAB	CARPET	-	FF	CPT-4	RUBBER	4"	FF	RB-4	GYPSUM BOARD	-	PE	-	ACOUSTICAL PANEL	○	FF	ACP-4	SEE REFLECTED	-
		-	-	-	CPT-5	-	-	-	-	-	-	-	-	GYPSUM BOARD	○	PE	-	CEILING PLAN	-
HS 278	FACULTY TUTORIAL LAB	STATIC DISSIPATIVE	-	FF	SDF-1	RUBBER	4"	FF	RB-1	GYPSUM BOARD	-	PE	-	ACOUSTICAL PANEL	○	FF	ACP-1	SEE REFLECTED	-
		-	-	-	-	-	-	-	-	-	-	-	-	-	○	-	-	CEILING PLAN	-
HS 280	AV EQUIPMENT / WORKROOM / CHECKOUT	STATIC DISSIPATIVE	-	FF	SDF-1	RUBBER	4"	FF	RB-1	GYPSUM BOARD	-	PE	-	ACOUSTICAL PANEL	○	FF	ACP-1	SEE REFLECTED	-
		-	-	-	-	-	-	-	-	-	-	-	-	-	○	-	-	CEILING PLAN	-
HS 282	COMPUTER TECH OFFICE	CARPET	-	FF	CPT-4	RUBBER	4"	FF	RB-4	GYPSUM BOARD	-	PE	-	ACOUSTICAL PANEL	○	FF	ACP-1	SEE REFLECTED	-
		-	-	-	-	-	-	-	-	-	-	-	-	-	○	-	-	CEILING PLAN	-

NOTES

1. ALL INTERIOR FINISHES SHALL COMPLY WITH CBC CHAPTER 8, CFC SECTION 1103.3.3. AND TITLE 19 C.C.R.
2. (P-10) IS THE FIELD COLOR FOR INTERIOR GYPSUM BOARD SURFACES, TYPICAL UNO.
3. REFER TO FINISH PLANS AND INTERIOR ELEVATIONS FOR FLOOR PATTERNS, WALL ACCENT COLORS, AND CEILING ACCENT COLORS.
4. REFER TO WINDOW SCHEDULES FOR GLAZING TYPES AND COLORS.
5. MATERIAL DESIGNATIONS MARKED WITH AN ASTERISK (RF-1*) ARE PART OF A BID ALTERNATE. SEE LIST OF BID ALTERNATES ON SHEET T-4.

ABBREVIATIONS

AC	ASPHALTIC CONCRETE
ACP	ACOUSTICAL CEILING PANEL
ACT	ACOUSTICAL CEILING TILE
ALUM	ALUMINUM
ASC	ARCHITECTURAL SUN CONTROL
AWP	ACOUSTICAL WALL PANEL
BD	BOARD
BR	BRICK
CC	CUSTOM COLOR
CD	COILING DOOR
CG	CORNER GUARD
CGL	CHANNEL GLASS
CHBD	CHALKBOARD
CHT	COMMERICAL HOMOGENEOUS TILE
CMT	CERAMIC MOSAIC TILE
CMU	CONCRETE MASONRY UNIT
CONC	CONCRETE
CPT	CARPET
CT	CERAMIC TILE
CW	CURTAIN WALL
DIR	DIRECTORY
DF	DRINKING FOUNTAIN
EM	ENTRY MATS
EP	EPOXY ENAMEL PAINT
EPXY	EPOXY / RESINOUS FLOORING
EXIST	EXISTING TO REMAIN
EXPSD	EXPOSED
FB	FABRIC
FC	FIBER CEMENT
FEC	FIRE EXTINGUISHER CABINET
FGL	FIBERGLASS
FF	FACTORY FINISH
FFP	FOLDING FABRIC PARTITION
FNC	FENCING
FPP	FOLDING PANEL PARTITION
FRP	FIBERGLASS REINFORCED PANEL
FWC	FABRIC WALL COVERING
GFRC	GLASS FIBER-REINFORCED CONCRETE
GFRG	GLASS FIBER-REINFORCED GYPSUM
GL	GLASS
GMT	GLASS MOSAIC TILE
GT	GROUT
GYP	GYPSUM
HPC	HIGH PERFORMANCE COATING
ICC	INTEGRAL COLOR CONCRETE
ID	IDENTIFYING DEVICES (SIGNS)
LIN	LINOLEUM FLOORING
LKR	LOCKER
LVB	LOUVER BLIND
LVR	LOUVER
LWS	LAMINATE WOOD SURFACING
MAR	MARBLE
MB	MARKERBOARD
MBR	MORTAR FOR BRICK
MCMU	MORTAR FOR CONCRETE MASONRY UNIT
MP	METAL PANEL / ALUMINUM WALL PANEL
MPC	METAL PAN CEILING
MR	METAL ROOFING
MRW	METAL ROOF & WALL CLADDING
MTL	METAL
P	PAINT
PART	PARTITION
PCT	PORCELAIN CERAMIC TILE
PE	PAINT EGGSHELL
PF	PAINT FLAT
PG	PAINT GLOSS
PLAM	PLASTIC LAMINATE
PLAS	PLASTER
PLS	PAINT LOW SHEEN
PMP	PERFORATED METAL PANEL
PNLF	PANEL FABRIC
PNL	PANEL, RESIN PANEL
PO	POLISHED
PR	PLASTIC ROOFING
PREFAB	PRE-FABRICATED
PSG	PAINT SEMI-GLOSS
PSS	PLAYGROUND SAFETY SURFACING
PVDF	POLYVINYLIDENE DIFLUORIDE COATING
QS	QUARTZ SURFACING
QT	QUARRY TILE
RB	RUBBER BASE
RESIL	RESILIENT FLOORING
RF	RUBBER FLOORING
RS	ROLLER SHADE
RST	RESILIENT STAIR TREAD
RTF	RUBBER TILE FLOORING
SCC	SOLID COMPOSITE COUNTERTOP
SDF	STATIC DISSIPATIVE FLOORING
SDT	STATIC DISSIPATIVE TILE
SF	SATIN FINISH
SLR	SEALER
SPF	SOLID POLYMER FABRICATION / RESIN PANEL
SPG	SOLID POLYMER GLAZING
SST	STAINLESS STEEL
SSU	SOLID SURFACE
STN	STAIN
SV	SHEET VINYL
SWF	SPECIALTY WALL FINISH / DECORATIVE PAINT FINISH
TC	TOILET COMPARTMENT
TERR	TERRAZZO
TKBD	TACKBOARD
TVWP	TACKABLE VINYL WALL PANEL
TWP	TACKABLE WALL PANEL
UOS	UNDERSIDE OF STRUCTURE
UOPR	UNDERSIDE OF PLASTIC ROOFING
UP	UNPOLISHED
UPHOL	UPHOLSTERY, UPHOLSTERED SEATING
VCT	VINYL COMPOSITION TILE
VFWC	VINYL FABRIC WALL COVERING
WWF	WELDED WIRE FABRIC or WOVEN WIRE FABRIC/ METAL FABRICATION

tBP
architecture planning interiors management

LICENSED ARCHITECT — WM. C. PAN, AIA — NO. C26074 — REN. 4-30-11 — STATE OF CALIFORNIA

tBP/Architecture
5455 Wilshire Boulevard, Suite 1200
Los Angeles, CA 90036-4242
ph: 323. 556. 3788 fx: 323. 556. 3799
architect

consultant

IDENTIFICATION STAMP
DIV. OF THE STATE ARCHITECT
OFFICE OF REGULATION SERVICES
File No. 19-C11
Appl No. 03-112201
AC ____ FLS ____ SS ____
DATE ____

DSA Los Angeles Basin Regional Office
700 North Alameda Street, Suite 5-500
Los Angeles, California 90012
ph: 213/897-3995 fx: 213/897-3159/0726
agency

ANTELOPE VALLEY COLLEGE
HEALTH & SCIENCE BUILDING
ANTELOPE VALLEY COMMUNITY COLLEGE DISTRICT
3041 WEST AVENUE K
LANCASTER, CA 93536-5426
owner

tBP project number : 20641.00
file name: Dtl-0913.dwg
drawn by: JT, MK checked by: MK
date: JULY 30, 2009 - 100% CD

Rev:	date:	description:
△1	11/16/09	ADDENDUM #1
△2	2/26/10	ADDENDUM #2

THIS DRAWING AND THE DESIGNS, DEPICTIONS, IDEAS AND OTHER INFORMATION CONTAINED HEREIN CONSTITUTE UNPUBLISHED WORK OF tBP/ARCHITECTURE AND SHALL REMAIN THE PROPERTY OF tBP/ARCHITECTURE IN PERPETUITY. NO PART THEREOF SHALL BE REPRODUCED, DISCLOSED, DISTRIBUTED, SOLD, PUBLISHED OR OTHERWISE USED IN ANY WAY WITHOUT THE ADVANCED EXPRESS WRITTEN CONSENT OF tBP/ARCHITECTURE.

drawing title:
FINISH SCHEDULE
SECOND FLOOR

drawing no.: △1 9.13
drawing of

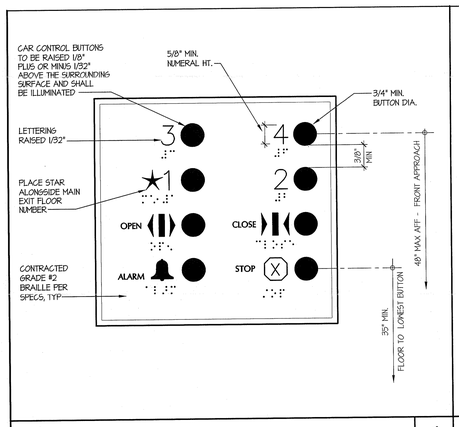

ELEVATOR CONTROL PANEL 1
SCALE: HALF

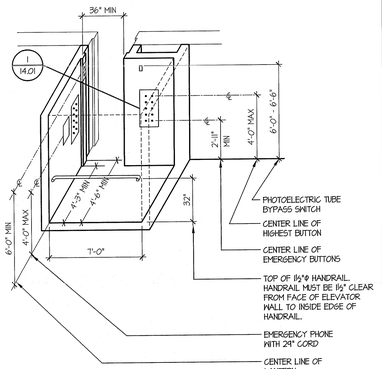

ELEVATOR CAB 2
SCALE: 1/4" = 1'-0"

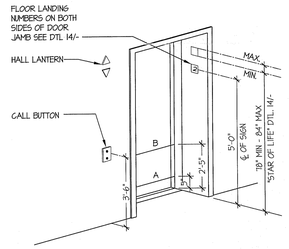

NOTES:
1. LINE A AND LINE B REPRESENT THE VERTICAL LOCATION OF THE DOOR REOPENING DEVICE.
2. DOOR-REOPENING DEVICES SHALL REMIAN EFFECTIVE FOR A PERIOD OF NOT LESS THAN 20 SECONDS.
3. THE MINIMUM ACCEPTABLE TIME FOR DOORS TO REMAIN FULLY OPEN SHALL NOT BE LESS THAN 5 SECONDS.

ELEVATOR CONTROLS AND SIGNAGE 3
SCALE: 1/4" = 1'-0"

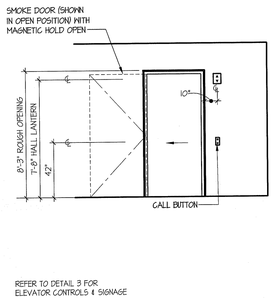

REFER TO DETAIL 3 FOR ELEVATOR CONTROLS & SIGNAGE

TYPICAL ELEVATOR ENTRY ELEVATION 4
SCALE: 1/4" = 1'-0"

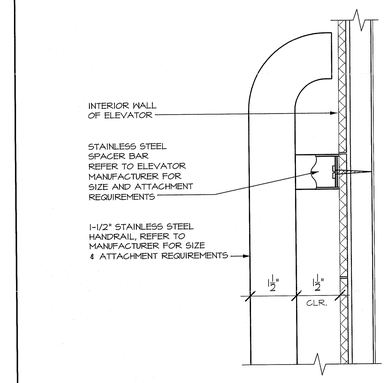

ELEVATOR HANDRAIL DETAIL 5
SCALE: HALF

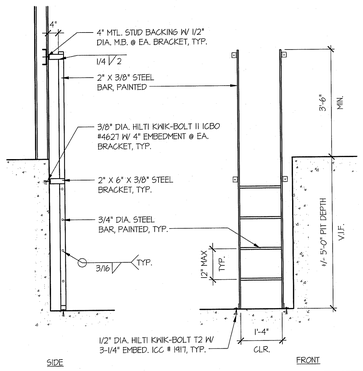

ELEVATOR PIT LADDER 7
SCALE: 1/2" = 1'-0"

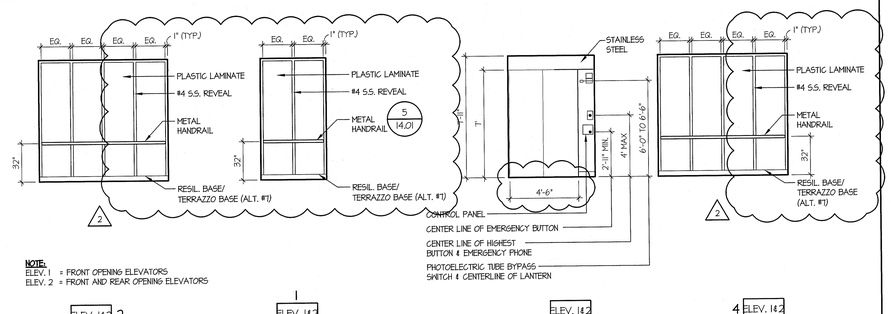

NOTE:
ELEV. 1 = FRONT OPENING ELEVATORS
ELEV. 2 = FRONT AND REAR OPENING ELEVATORS

ELEV. 14.2 2 | 1 ELEV. 14.2 | ELEV. 14.2 3 | 4 ELEV. 14.2

ELEVATOR CAB ELEVATIONS 9
SCALE: 1/4" = 1'-0"

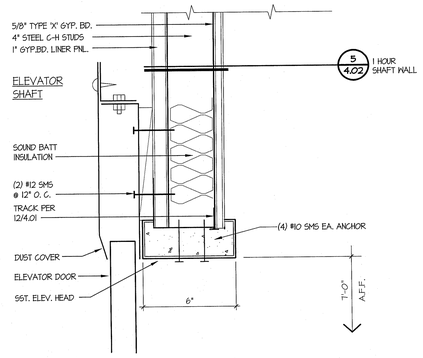

ELEVATOR DOOR JAMB 12
SCALE: 3" = 1'-0"

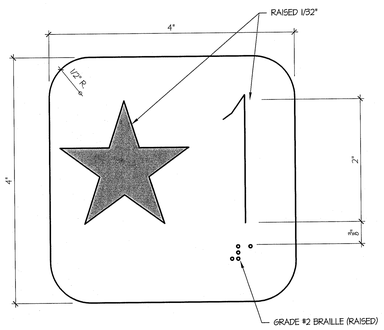

NOTES:
1. SIGN SHALL BE PERMANENTLY ATTACHED TO EACH SIDE OF HOISTWAY DOOR FRAME ON THE PORTION OF THE FRAME AT RIGHT ANGLES TO THE LANDING AREA.
2. SEE DETAIL 3 FOR MOUNTING HEIGHT.
3. STAR SYMBOL AT FIRST FLOOR ONLY.

ELEVATOR FLOOR SIGNAGE / STAIR SIGNAGE 14
SCALE: FULL

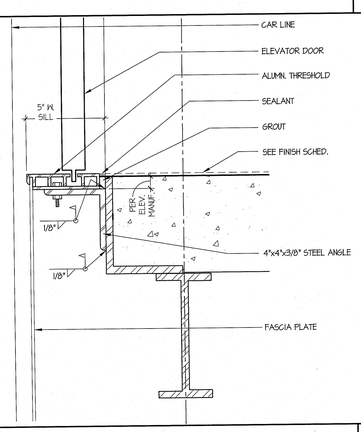

ELEVATOR THRESHOLD AT 2NDFLOOR 16
SCALE: 3" = 1'-0"

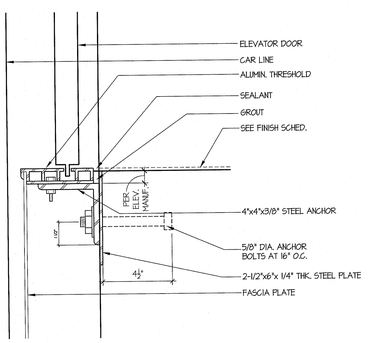

ELEVATOR THRESHOLD AT 1ST FLOOR 19
SCALE: 3" = 1'-0"

PASSENGER ELEVATOR REQUIREMENTS,
TYPICAL FOR ALL ELEVATORS CHAPTER 11B, 2007 CALIFORNIA BUILDING CODE

GENERAL. SIZE OF CAB AND CONTROL LOCATIONS AND REQUIRMENTS FOR ACCOMMODATION OF PERSONS WITH DISABILITIES. IN BUILDINGS TWO OR MORE STORIES IN HEIGHT, SERVED BY AN ELEVATOR, OR A BUILDING SERVED BY AN ELEVATOR REQUIRED BY CHAPTER 11B, OR A BUILDING SERVED BY AN ELEVATOR REQUIRED FOR ACCESSIBILITY BY SECTION 1104.1, IF MORE THAN ONE PASSENGER ELEVATOR IS PROVIDED, EACH FULL PASSENGER ELEVATOR SHALL COMPLY WITH CHAPTER 11B9.
OPERATION AND LEVELING. THE ELEVATOR SHALL BE AUTOMATIC PROVIDED WITH A SELF-LEVELING FEATURE THAT WILL AUTOMATICALLY BRING THE CAR TO THE FLOOR LANDINGS WITHIN A TOLERANCE OF PLUS OR MINUS ½ INCH UNDER NORMAL LOADING AND UNLOADING CONDITIONS. THE CLEARANCE BETWEEN THE CAR PLATFORM SILL AND THE EDGE OF THE HOISTWAY LANDING SHALL BE NO GREATER THAN 1 ¼ INCHES. (1116B.1.2)

DOOR SIZE. MINIMUM CLEAR WIDTH FOR ELEVATOR DOORS SHALL BE 36 INCHES. (1116B.1.4)

DOORS CLOSED BY AUTOMATIC MEANS SHALL BE PROVIDED WITH A DOOR-REOPENING DEVICE THAT WILL FUNCTION TO STOP AND REOPEN A CAR DOOR AND ADJACENT HOISTWAY DOOR IN CASE THE CAR DOOR IS OBSTRUCTED WHILE CLOSING. THIS DEVICE SHALL BE CAPABLE OF SENSING AN OBJECT OR PERSON IN THE PATH OF A CLOSING DOOR WITHOUT REQUIRING CONTACT FOR ACTIVATION AT A NOMINAL 5 INCHES AND 29 (1219MM AND 737MM) INCHES ABOVE THE FLOOR. (1116B.1.5)

PROVIDE MINIMUM ACCEPTABLE TIME FROM NOTIFICATION THAT A CAR IS ANSWERING A CALL (LANTERN AND AUDIBLE SIGNAL) UNTIL THE DOORS OF THE CAR START TO CLOSE USING FORMULA GIVEN IN SECTION 1116B.1.6.

THE MINIMUM ACCEPTABLE TIME FOR THE DOORS TO REMAIN OPEN SHALL BE NOT LESS THAN FIVE SECONDS. (1116.B.1.7)

THE CAR INSIDE SHALL ALLOW FOR THE TURNING OF A WHEELCHAIR. THE MINIMUM CLEAR DISTANCE BETWEEN WALLS OR BETWEEN WALL AND DOOR, EXCLUDING RETURN PANELS, SHALL BE NOT LESS THAN 80 INCHES BY 54 INCHES (1727MM BY 1372MM) FOR SIDE-SLIDE OPENING DOORS. SEE 2001 CBC FIGURE 11A-A. THE CENTERLINE OF ELEVATOR FLOOR BUTTONS SHALL BE NO HIGHER THAN 54 INCHES (1372MM) ABOVE THE FINISH FLOOR FOR SIDE APPROACH AND 48 INCHES (1219MM) FOR FRONT APPROACH. (1116B.1.8)

FLOOR BUTTONS SHALL BE PROVIDED WITH VISUAL INDICATORS TO SHOW WHEN EACH CALL IS REGISTERED. THE VISUAL INDICATORS SHALL BE EXTINGUISHED WHEN EACH CALL IS ANSWERED. (1116B.1.8)

THE EMERGENCY TELEPHONE HANDSET SHALL BE POSITIONED NO HIGHER THAN 4 FEET (1219MM) ABOVE THE FLOOR, AND THE HANDSET CORD SHALL BE A MINIMUM OF 2 FEET 5 (737MM) INCHES IN LENGTH. IF THE TELEPHONE SYSTEM IS LOCATED IN A CLOSED COMPARTMENT, THE COMPARTMENT DOOR HARDWARE SHALL BE LEVER TYPE CONFORMING TO THE PROVISIONS OF SECTION 1008.1.8, TYPE OF LOCK OR LATCH.

PASSENGER ELEVATOR CAR CONTROLS SHALL HAVE A MINIMUM DIMENSION OF ¾ INCH (19.1MM) AND SHALL BE RAISED 1/32 INCH (3.2MM) PLUS OR MINUS 1/64 INCH (0.8MM) ABOVE THE SURROUNDING SURFACE. (1116B.1.9)

CONTROL BUTTONS SHALL BE ILLUMINATED, SHALL HAVE SQUARE SHOULDERS, AND SHALL BE ACTIVATED BY A MECHANICAL MOTION THAT IS DETECTABLE. ALL CONTROL BUTTONS SHALL BE DESIGNATED BY ¾ INCH MINIMUM (19.1MM) RAISED CHARACTERS AND STANDARD RAISED SYMBOLS THAT CONFORM TO SECTIONS 11B.5.2. 11B.5.3, 11B.5.5 AND 11B.5.7 IMMEDIATELY TO THE LEFT OF THE CONTROL BUTTON. GRADE 2 BRAILLE THAT CONFORMS TO SECTION 11B.5.6 SHALL BE LOCATED IMMEDIATELY BELOW THE CHARACTER OR SYMBOL. A MINIMUM CLEAR SPACE OF ⅜ INCH (9.5MM) OR OTHER SUITABLE MEANS OF SEPARATION SHALL BE PROVIDED BETWEEN ROWS OF CONTROL BUTTONS. SEE FIGURE 11B-40B. THE RAISED CHARACTERS SHALL BE WHITE ON A BLACK BACKGROUND. (1116B.1.9)

CONTROLS AND EMERGENCY EQUIPMENT IDENTIFIED BY RAISED SYMBOLS SHALL INCLUDE, BUT NOT BE LIMITED TO, "DOOR OPEN", "DOOR CLOSE", "ALARM BELL", "EMERGENCY STOP" AND "TELEPHONE". THE CALL BUTTON FOR THE MAIN ENTRY FLOOR SHALL BE DESIGNATED BY A RAISED STAR AT THE LEFT OF THE FLOOR DESIGNATION. (1116B.1.9)

THE CENTERLINE OF THE HALL CALL BUTTON SHALL BE 42 INCHES (1067MM) ABOVE THE FLOOR. BUTTONS SHALL BE A MINIMUM OF 3/4 INCH (19.1MM) IN SIZE AND SHALL BE RAISED 1/8 INCH (3.2MM) PLUS OR MINUS 1/32 INCH (0.8MM) ABOVE SURROUNDING SURFACE. VISUAL INDICATION SHALL BE PROVIDED TO SHOW EACH CALL REGISTERED AN EXTINGUISHED WHEN ANSWERED. OBJECTS ADJACENT TO, AND BELOW, HALL CALL BUTTONS SHALL NOT PROJECT MORE THAN 4 INCHES (102MM) FROM THE WALL. (1116B.1.10)

MINIMUM ILLUMINATION. THE MINIMUM ILLUMINATION AT THE CAR CONTROLS, THRESHOLD AND THE LANDING WHEN THE CAR AND LANDING DOORS ARE OPEN SHALL NOT BE LESS THAN 5 FOOT-CANDLES (54LX). (1116B.1.12)

HALL LANTERN. A VISUAL AND AUDIBLE SIGNAL SHALL BE PROVIDED AT EACH HOISTWAY ENTRANCE INDICATING TO THE PROSPECTIVE PASSENGER THE CAR ANSWERING THE CALL AND ITS DIRECTION OF TRAVEL AS FOLLOWS:
THE VISUAL SIGNAL FOR EACH DIRECTION SHALL BE A MINIMUM OF 2 ½ INCHES(64MM) HIGH BY 2 ½ INCHES (64MM) WIDE AND VISIBLE FROM THE PROXIMITY OF THE HALL CALL BUTTON.
THE AUDIBLE SIGNAL SHALL SOUND ONCE FOR THE UP DIRECTION AND TWICE FOR THE DOWN DIRECTION OR SHALL HAVE VERBAL ANNUNCIATORS THAT SAY UP OR DOWN.
THE CENTERLINE OF THE FIXTURE SHALL BE LOCATED A MINIMUM OF 6 FEET (1829MM) IN HEIGHT FROM THE LOBBY FLOOR.
THE USE OF IN-CAR LANTERNS, LOCATED IN OR ON THE CAR DOOR JAMBS, VISIBLE FROM PROXIMITY OF THE HALL CALL BUTTONS AND CONFORMING TO THE ABOVE REQUIREMENTS SHALL OR WILL BE ACCEPTABLE.
THE USE OF ARROW SHAPES IS PREFERRED FOR VISIBLE SIGNALS. (1116B.1.14)

PASSENGER ELEVATOR LANDING JAMBS ON ALL ELEVATOR FLOORS SHALL HAVE THE NUMBER OF THE FLOOR ON WHICH THE JAMB IS LOCATED DESIGNATED BY RAISED CHARACTERS THAT ARE A MINIMUM OF 2 INCHES (51MM) IN HEIGHT AND CONFORM TO SECTION 11B.5.5 AND GRADE 2 BRAILLE THAT CONFORMS TO SECTION 11B.5.6 LOCATED 60 INCHES (1524MM) ON CENTER ABOVE THE FLOOR ON THE JAMB PANELS ON BOTH SIDES OF THE DOOR SO THAT THEY ARE VISIBLE FROM WITHIN THE ELEVATOR. ON THE GRADE LEVEL, A RAISED FIVE-POINTED STAR SHALL BE PLACED TO THE LEFT OF THE RAISED CHARACTER AT THE FIRST FLOOR. THE OUTSIDE DIAMETER OF THE STAR SHALL BE 2 INCHES. BRAILLE SHALL BE PLACED DIRECTLY BELOW OF THE CORRESPONDING RAISED CHARACTERS. (1116B.1.14)

PASSENGER ELEVATORS SHALL BE LOCATED ON AN ACCESSIBLE ROUTE, LOCATED NEAR A MAJOR PATH OF TRAVEL AND PROVISIONS SHALL BE MADE TO ENSURE THAT THEY REMAIN ACCESSIBLE AND USABLE AT ALL TIMES THE BUILDING IS OCCUPIED. (1116B.1.15)

ELEVATOR GENERAL NOTES 20
SCALE: 1/4" = 1'-0"

tBP
architecture
planning
interiors
management

LICENSED ARCHITECT
STATE OF CALIFORNIA

tBP/Architecture
5455 Wilshire Boulevard, Suite 1200
Los Angeles, CA 90036-4242
ph: 323. 556. 3788 fx: 323. 556. 3799
architect

consultant

IDENTIFICATION STAMP
DIV. OF THE STATE ARCHITECT
OFFICE OF REGULATION SERVICES
File No. 19-C11
Appl No. 03-112201
AC ____ FLS ____ SS ____
DATE ____

DSA Los Angeles Basin Regional Office
700 North Alameda Street, Suite 5-500
Los Angeles, California 90012
ph: 213/897-3995 fx: 213/897-3159/0726
agency

ANTELOPE VALLEY COLLEGE
HEALTH & SCIENCE BUILDING
ANTELOPE VALLEY COMMUNITY COLLEGE DISTRICT
3041 WEST AVENUE K
LANCASTER, CA 93536-5426
owner

tBP project number : 20641.00
file name: D11-140LD.dwg
drawn by: ? checked by: ?
date: JULY 30, 2009 - 100% CD

Rev:	date:	description:
2	2/26/10	ADDENDUM #2

THIS DRAWING AND THE DESIGNS, DEPICTIONS, IDEAS AND OTHER INFORMATION CONTAINED HEREIN CONSTITUTE UNPUBLISHED WORK OF tBP/ARCHITECTURE AND SHALL REMAIN THE PROPERTY OF tBP/ARCHITECTURE IN PERPETUITY. NO PART THEREOF SHALL BE REPRODUCED, DISCLOSED, DISTRIBUTED, SOLD, PUBLISHED OR OTHERWISE USED IN ANY WAY WITHOUT THE ADVANCED EXPRESS WRITTEN CONSENT OF tBP/ARCHITECTURE.

drawing title:
ELEVATOR DETAILS

drawing no.:
14.01
drawing of

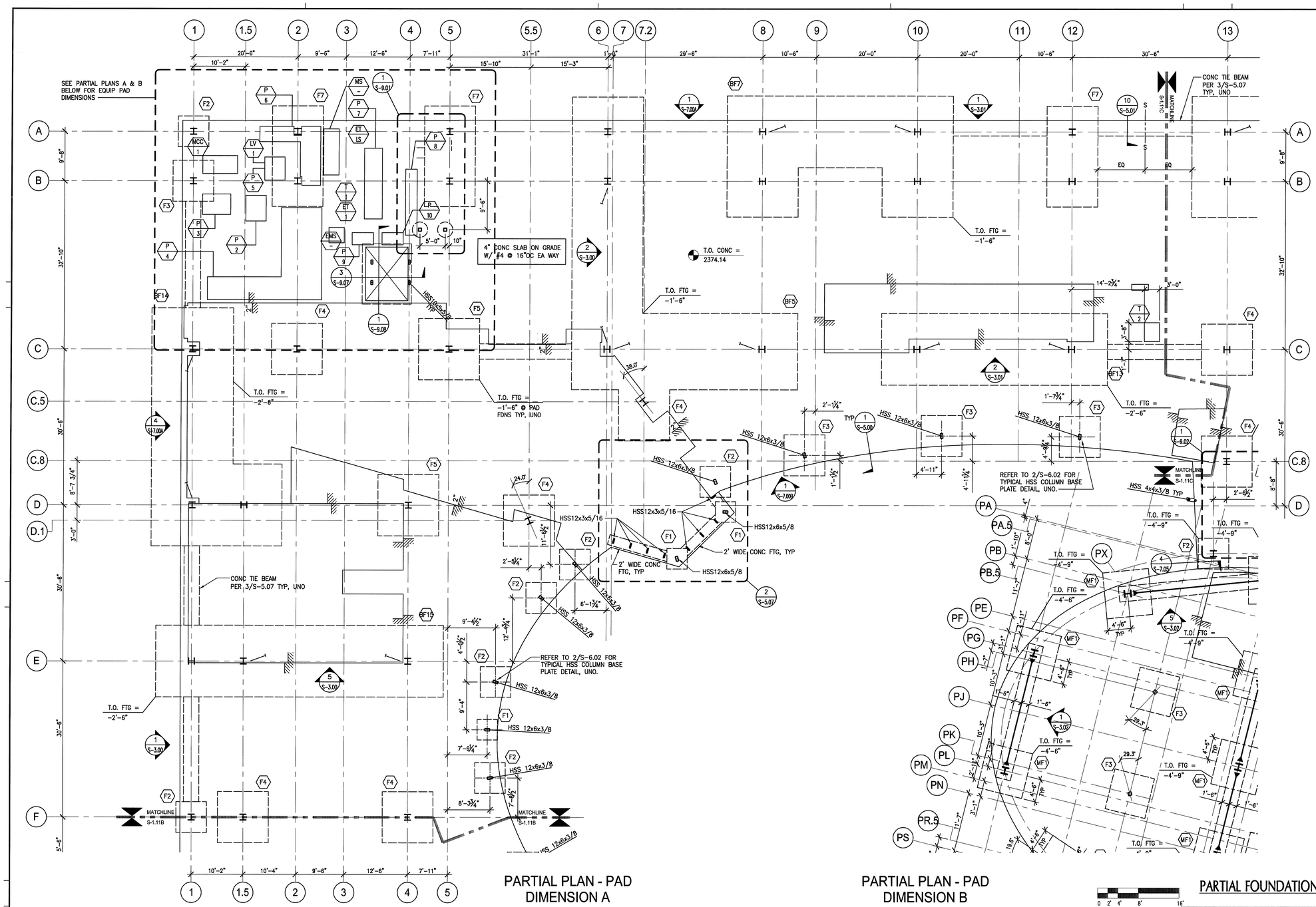

PARTIAL PLAN - PAD DIMENSION A

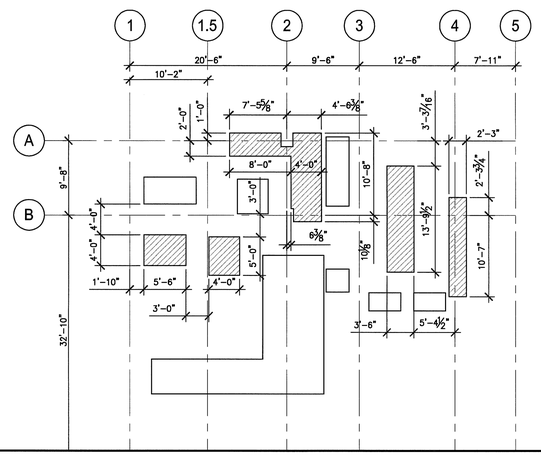

PARTIAL PLAN - PAD DIMENSION B

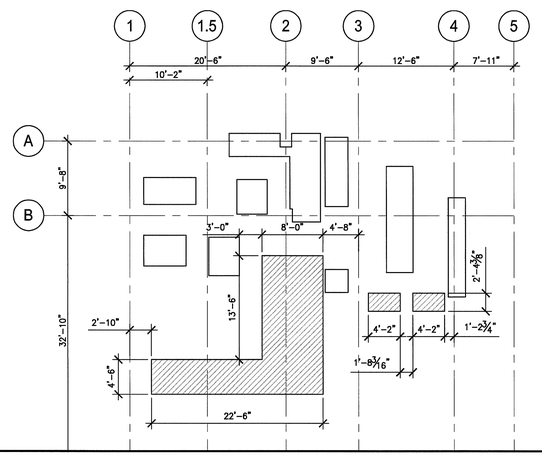

PARTIAL FOUNDATION PLAN - NORTH WING

SCALE: 1/8" = 1'-0"

0 2' 4' 8' 16'

NORTH

FOUNDATION NOTES:

1. SEE S-5.00 & S-5.01 FOR TYPICAL CONCRETE DETAILS.
2. INDICATES SPECIAL CONCENTRIC BRACED FRAME.
3. (BF#) INDICATES BRACE FRAME FOOTING PER DETAILS ON SHEET S-5.02 TO S-5.05.
4. (F#) INDICATES GRAVITY FRAME FOOTING PER DETAIL 5/S5.01
5. SEE COLUMN SCHEDULE ON S-4.00, S-4.01, AND S-4.02 FOR COLUMN SIZES.
6. T.O. FTG = 0'-0" INDICATES TOP OF FOOTING ELEVATION RELATIVE TO TOP OF CONC.
7. SEE 3/S-5.01 FOR OVEREXCAVATION/RECOMPACTION REQUIREMENTS. CONTRACTOR TO CONFIRM LOCATION OF EXISTING UTILITIES NORTH OF GRID A AND PROVIDE TEMPORARY SHORING AS REQUIRED TO MEET THE OVEREXCAVATION REQUIREMENTS SHOWN.
8. INDICATES DEPRESSION IN SLAB ON GRADE PER 2/S-5.00 OR 3/S-5.00.
9. S — — — S INDICATES STEPPED FOOTING PER 6/S-5.00.
10. (MF#) INDICATES MOMENT FRAME FOOTING PER DETAILS ON SHEETS S-5.06 AND S-5.06A.
11. INDICATES MOMENT FRAME BEAM ENCASED IN CONCRETE. SEE 1/S-5.06 FOR MOMENT CONNECTION DETAIL.
12. (X #) INDICATES MECHANICAL EQUIPMENT, SEE SCHEDULE ON S-1.11C.

KEY PLAN

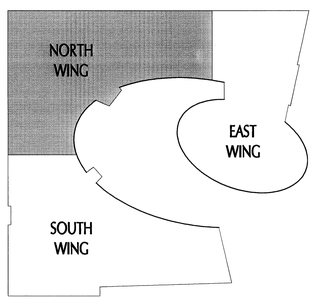

NORTH

tBP
architecture planning interiors management
tBP/Architecture
5455 Wilshire Boulevard, Suite 1200
Los Angeles, CA 90036-4242
ph: 323. 556. 3788 fx: 323. 556. 3799
architect

kpff Consulting Engineers
301 North Lake Avenue, Suite 550
Pasadena, California 91101
626/51 570-101 Fax 626/51 570-0121
consultant

IDENTIFICATION STAMP
DIV. OF THE STATE ARCHITECT
OFFICE OF REGULATION SERVICES
File No. 19-C11
Appl No. 03-112201
AC ____ RS ____ SS ____
DATE ____

DSA Los Angeles Basin Regional Office
700 North Alameda Street, Suite 5-500
Los Angeles, California 90012
ph: 213/897-3995 fx: 213/897-3159/0726
agency

ANTELOPE VALLEY COLLEGE HEALTH & SCIENCE BUILDING

ANTELOPE VALLEY COMMUNITY COLLEGE DISTRICT
3041 WEST AVENUE K
LANCASTER, CA 93536-5426

owner

tBP project number : 20641.00
file name: S-111A.DWG
drawn by: SG checked by: GD
date: JULY 30, 2009 - 100% CD

Rev:	date:	description:
2	02-26-10	ADDENDUM #2

THIS DRAWING AND THE DESIGNS, DEPICTIONS, IDEAS AND OTHER INFORMATION CONTAINED HEREIN CONSTITUTE UNPUBLISHED WORK OF tBP/ARCHITECTURE AND SHALL REMAIN THE PROPERTY OF tBP/ARCHITECTURE IN PERPETUITY. NO PART THEREOF SHALL BE REPRODUCED, DISCLOSED, DISTRIBUTED, SOLD, PUBLISHED OR OTHERWISE USED IN ANY WAY WITHOUT THE ADVANCED EXPRESS WRITTEN CONSENT OF tBP/ARCHITECTURE.

drawing title:
PARTIAL FOUNDATION PLAN - NORTH WING

drawing no.:
S-1.11A
drawing of

File: K:\20641\2007\107833 - Antelope Valley College - Health and Science Building\sdraft\S-111A.dwg
Plotted: 3/2/10 at 3:02pm By: JINOPENCO
Plotted: 107833_building_A.pmsg, A.pmsg, 107833_grid.dwg 107833_TTP.dwg

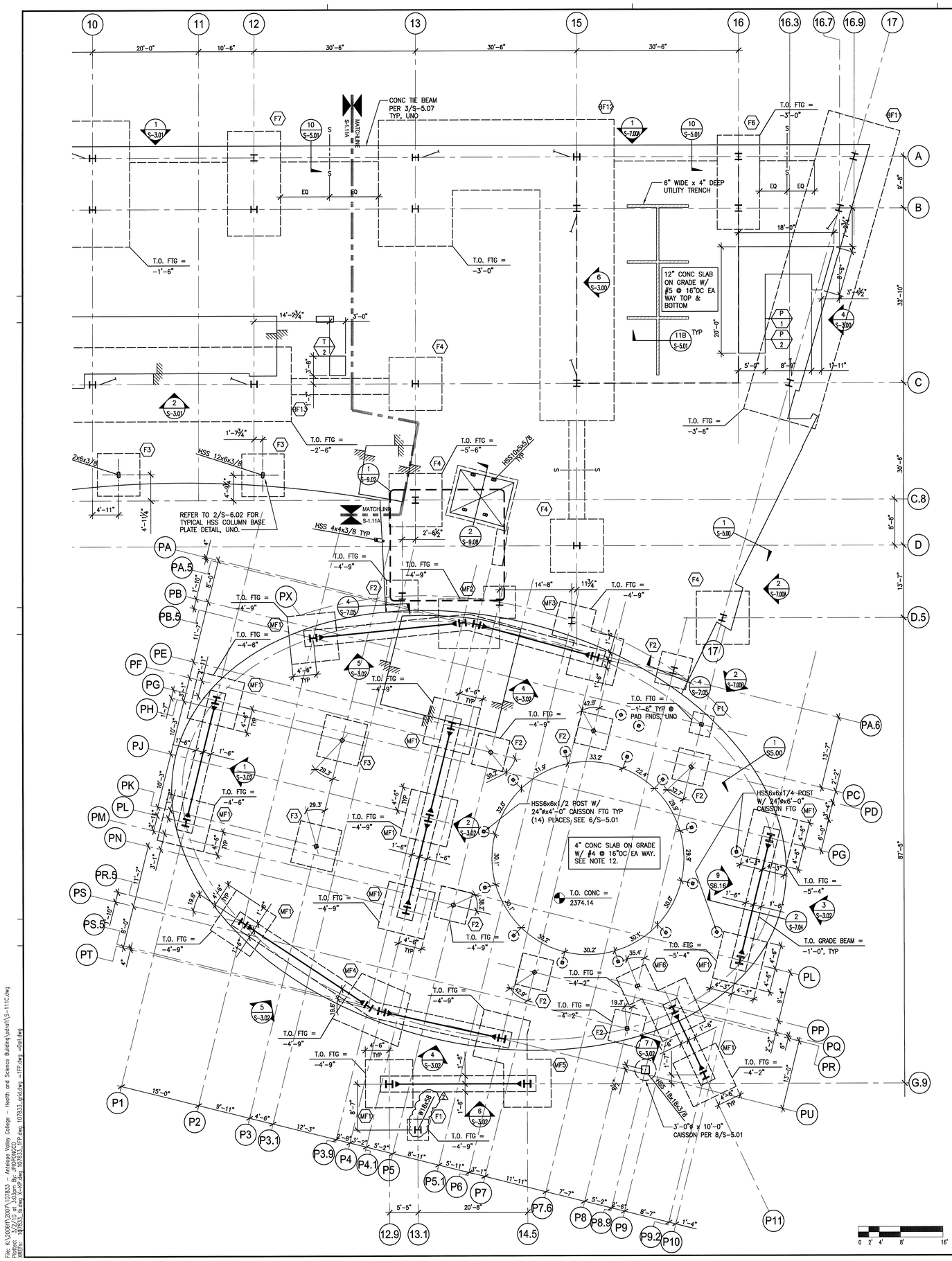

MECHANICAL EQUIPMENT SCHEDULE		
FIRST FLOOR EQUIPMENT	MAXIMUM OPERATING WEIGHT	UNIT ANCHORAGE
P 1	250#	5/M6.2
P 2	250#	5/M6.2
P 3	400#	2/M6.2
P 4	400#	2/M6.2
MS –	2000#	4/S-5.09
EMS –	1600#	3/S-5.09
ATS –	650#	3/S-5.10
ATS LS	164#	3/S-5.10
T 1	2590#	5/S-5.09
T 2	1597#	5/S-5.09
MCC 1	2400#	9/S-5.09
E1 LDA	230#	4/S-5.10
T 1 LDA	610#	4/S-5.10
E1 DHA	615#	4/S-5.10
ET 1	643#	5/S-5.09
ET LS	35#	5/S-5.09
LAD 1	360#	9/S-5.08
LV 1	1288#	7/S-5.08

FOUNDATION NOTES:

1. SEE S-5.00 & S-5.01 FOR TYPICAL CONCRETE DETAILS.
2. INDICATES SPECIAL CONCENTRIC BRACED FRAME.
3. (BF#) INDICATES BRACE FRAME FOOTING PER DETAILS ON SHEET S-5.02 TO S-5.05.
4. (F#) INDICATES GRAVITY FRAME FOOTING PER DETAIL 5/S5.01
5. SEE COLUMN SCHEDULE ON S-4.00, S-4.01, AND S-4.02 FOR COLUMN SIZES.
6. T.O. FTG = 0'-0" INDICATES TOP OF FOOTING ELEVATION.
7. SEE 3/S-5.01 FOR OVEREXCAVATION/RECOMPACTION REQUIREMENTS. CONTRACTOR TO CONFIRM LOCATION OF EXISTING UTILITIES NORTH OF GRID A AND PROVIDE TEMPORARY SHORING AS REQUIRED TO MEET THE OVEREXCAVATION REQUIREMENTS SHOWN. (3)
8. INDICATES DEPRESSION IN SLAB ON GRADE PER 2/S-5.00 OR 3/S-5.00.
9. S – – – – S INDICATES STEPPED FOOTING PER 6/S-5.00.
10. (MF#) INDICATES MOMENT FRAME FOOTING PER DETAILS ON SHEETS S-5.06 AND S-5.06A.
11. INDICATES MOMENT FRAME BEAM ENCASED IN CONCRETE. SEE 1/S-5.06 FOR MOMENT CONNECTION DETAIL.
12. PROVIDE SLOPED SLAB-ON-GRADE FOR BID ALT #06 PER 2/S-5.00 AND 3/S-5.00.

KEY PLAN

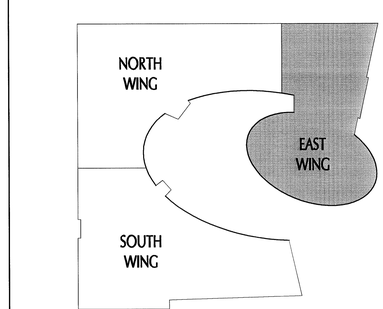

PARTIAL FOUNDATION PLAN - EAST WING
SCALE: 1/8" = 1'-0"

tBP
architecture
planning
interiors
management
tBP/Architecture
5455 Wilshire Boulevard, Suite 1200
Los Angeles, CA 90036-4242
ph: 323. 556. 3788 fx: 323. 556. 3799
LICENSED ARCHITECT STATE OF CALIFORNIA
architect

kpff Consulting Engineers
301 North Lake Avenue, Suite 550
Pasadena, California 91101
626/39 579-1921 Fax 626/39 579-1921
REGISTERED PROFESSIONAL ENGINEER STRUCTURAL STATE OF CALIFORNIA
consultant

IDENTIFICATION STAMP
DIV. OF THE STATE ARCHITECT
OFFICE OF REGULATION SERVICES
File No. 19-C11
Appl No. 03-112201
AC ____ RLS ____ SS ____
DATE ____

DSA Los Angeles Basin Regional Office
700 North Alameda Street, Suite 5-500
Los Angeles, California 90012
ph: 213/897-3995 fx: 213/897-3159/0726
agency

ANTELOPE VALLEY COLLEGE HEALTH & SCIENCE BUILDING

ANTELOPE VALLEY COMMUNITY COLLEGE DISTRICT
3041 WEST AVENUE K
LANCASTER, CA 93536-5426

owner

tBP project number : 206410.00
file name: S-111C.DWG
drawn by: SG checked by: CD
date: JULY 30, 2009 - 100% CD

Rev:	date:	description:
2	02-26-10	ADDENDUM #2

THIS DRAWING AND THE DESIGNS, DEPICTIONS, IDEAS AND OTHER INFORMATION CONTAINED HEREIN CONSTITUTE UNPUBLISHED WORK OF tBP/ARCHITECTURE AND SHALL REMAIN THE PROPERTY OF tBP/ARCHITECTURE IN PERPETUITY. NO PART THEREOF SHALL BE REPRODUCED, DISCLOSED, DISTRIBUTED, SOLD, PUBLISHED OR OTHERWISE USED IN ANY WAY WITHOUT THE ADVANCED EXPRESS WRITTEN CONSENT OF tBP/ARCHITECTURE.

drawing title:
PARTIAL FOUNDATION PLAN - EAST WING

drawing no:
S-1.11C
drawing of

File: K:\2006\1\2007\107833 - Antelope Valley College - Health and Science Building\sdraft\S-111C.dwg
Plotted: 3/2/10 at 3:03pm By: JPROPINCO
XREFS: 107833_ts.dwg X-ref:dwg 107833_TP.dwg 107833_grid.dwg =TP.dwg =Dpt.dwg

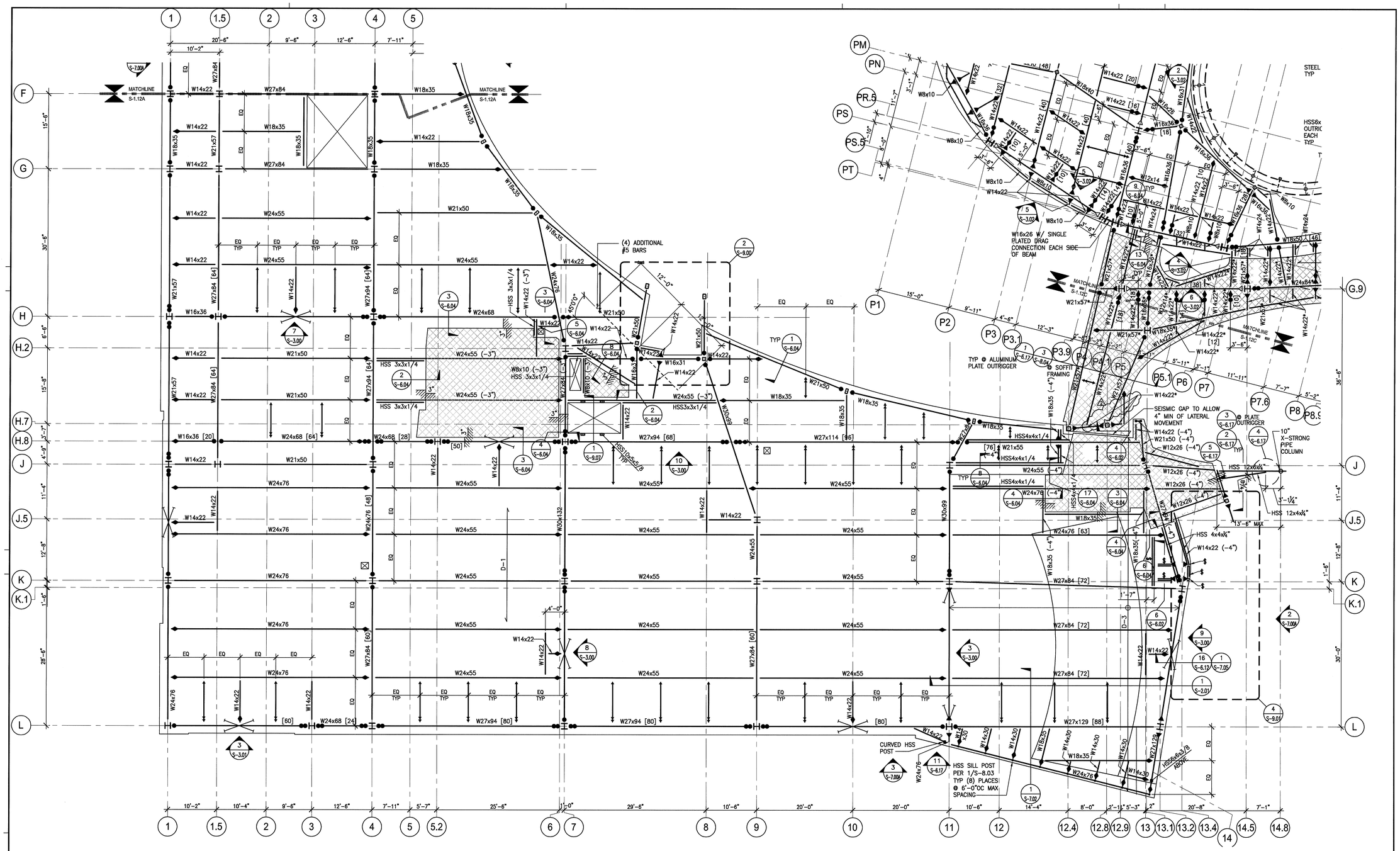

PARTIAL 2ND FLOOR FRAMING PLAN - SOUTH WING

SCALE: 1/8" = 1'-0"

NORTH

SECOND FLOOR FRAMING PLAN NOTES:

1. INDICATES SPECIAL MOMENT FRAME BEAM, SEE S-3.02 AND S-6.15.
2. INDICATES BRACE FRAME BELOW.
3. D-1 INDICATES DECKING PER 1/S-6.01.
4. INDICATES LATERAL BRACE PER 7/S-6.00.
5. INDICATES SINGLE PLATED DRAG CONNECTION PER 1/S-6.03 & 3/S-6.03.
6. SEE S-6.00, S-6.01, S-6.02 AND S-6.04 FOR TYPICAL STEEL DETAILS.
7. SEE COLUMN SCHEDULE ON S-4.00, S-4.01, AND S-4.02 FOR COLUMN SIZES.
8. INDICATES GRAVITY MOMENT CONNECTION PER S-6.00.
9. INDICATES DECK DEPRESSION.
10. * INDICATES -4 1/4" BELOW TYPICAL TOP OF STEEL.
11. INDICATES DOUBLE PLATED DRAG CONNECTION PER 1/S-6.03 & 3/S-6.03.
12. INDICATES FULL HEIGHT STIFFENERS AT CONNECTION PER 1C/S-6.00.
13. [X] INDICATES NUMBER OF 3/4"øx5" WELDED STUDS PER 14/S-6.01. WHERE NOT INDICATED, PROVIDE 3/4"øx5" AT MAX SPACING OF 12"OC AT ALL BEAMS AND GIRDERS.
14. BEAMS AROUND OPENINGS ARE 8" FROM EDGE OF OPENING, UNO.
15. INDICATES SLAB DEPRESSION.
16. WHERE THESE SYMBOLS ARE CALLED OUT ON A MOMENT FRAME BEAM OR A MOMENT FRAME COLUMN, PROVIDE LATERAL BRACING PER DETAIL 7/S-6.02.
17. INDICATES GRAVITY MOMENT CONNECTION WITH STIFFENERS PER 8/S-6.00.
18. X/# INDICATES MECHANICAL EQUIPMENT, SEE SCHEDULE ON S-1.12C.
19. REFER TO LAB/ FOOD SERVICE/ MEP DRAWINGS FOR MISCELLANEOUS HUNG EQUIPMENT.
20. $ INDICATES W14x22 DEPRESSED 4" BELOW TYPICAL TOP OF STEEL WITH HSS 4x4x1/4 ABOVE Wx BEAM.

KEY PLAN

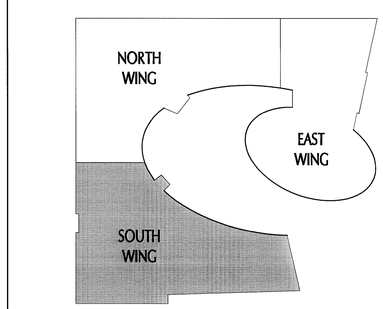

NORTH

tBP architecture planning interiors management

tBP/Architecture
5455 Wilshire Boulevard, Suite 1200
Los Angeles, CA 90036-4242
ph: 323. 556. 3788 fx: 323. 556. 3799
architect

kpff Consulting Engineers
301 North Lake Avenue, Suite 550
Pasadena, California 91101
626/ 578-1451 Fax 626/ 578-9161
consultant

IDENTIFICATION STAMP
DIV. OF THE STATE ARCHITECT
OFFICE OF REGULATION SERVICES
File No. 19-C11
Appl No. 03-112201
AC ____ RS ____ SS ____
DATE ____

DSA Los Angeles Basin Regional Office
700 North Alameda Street, Suite 5-500
Los Angeles, California 90012
ph: 213/897-3995 fx: 213/897-3159/0726
agency

ANTELOPE VALLEY COLLEGE HEALTH & SCIENCE BUILDING

ANTELOPE VALLEY COMMUNITY COLLEGE DISTRICT
3041 WEST AVENUE K
LANCASTER, CA 93536-5426

owner

tBP project number : 2064L00
file name: S-112B.DWG
drawn by: SG checked by: GD
date: JULY 30, 2009 - 100% CD

Rev:	date:	description:
2	02-26-10	ADDENDUM #2

THIS DRAWING AND THE DESIGNS, DEPICTIONS, IDEAS AND OTHER INFORMATION CONTAINED HEREIN CONSTITUTE UNPUBLISHED WORK OF tBP/ARCHITECTURE AND SHALL REMAIN THE PROPERTY OF tBP/ARCHITECTURE IN PERPETUITY. NO PART THEREOF SHALL BE REPRODUCED, DISCLOSED, DISTRIBUTED, SOLD, PUBLISHED OR OTHERWISE USED IN ANY WAY WITHOUT THE ADVANCED EXPRESS WRITTEN CONSENT OF tBP/ARCHITECTURE.

drawing title:
PARTIAL 2ND FLR. FRMG. PLAN - SOUTH WING

drawing no.:
S-1.12B
drawing of

File: K:\2006R\2007\107833 - Antelope Valley College - Health and Science Building\sstruct\S-112B.dwg
Plotted: 3/2/10 at 3:04pm By: JPIOPIONGCO
XREFS: tBP2D_Stamp, S-Xref.dwg, 107833_grid.dwg, 107833_2FP.dwg

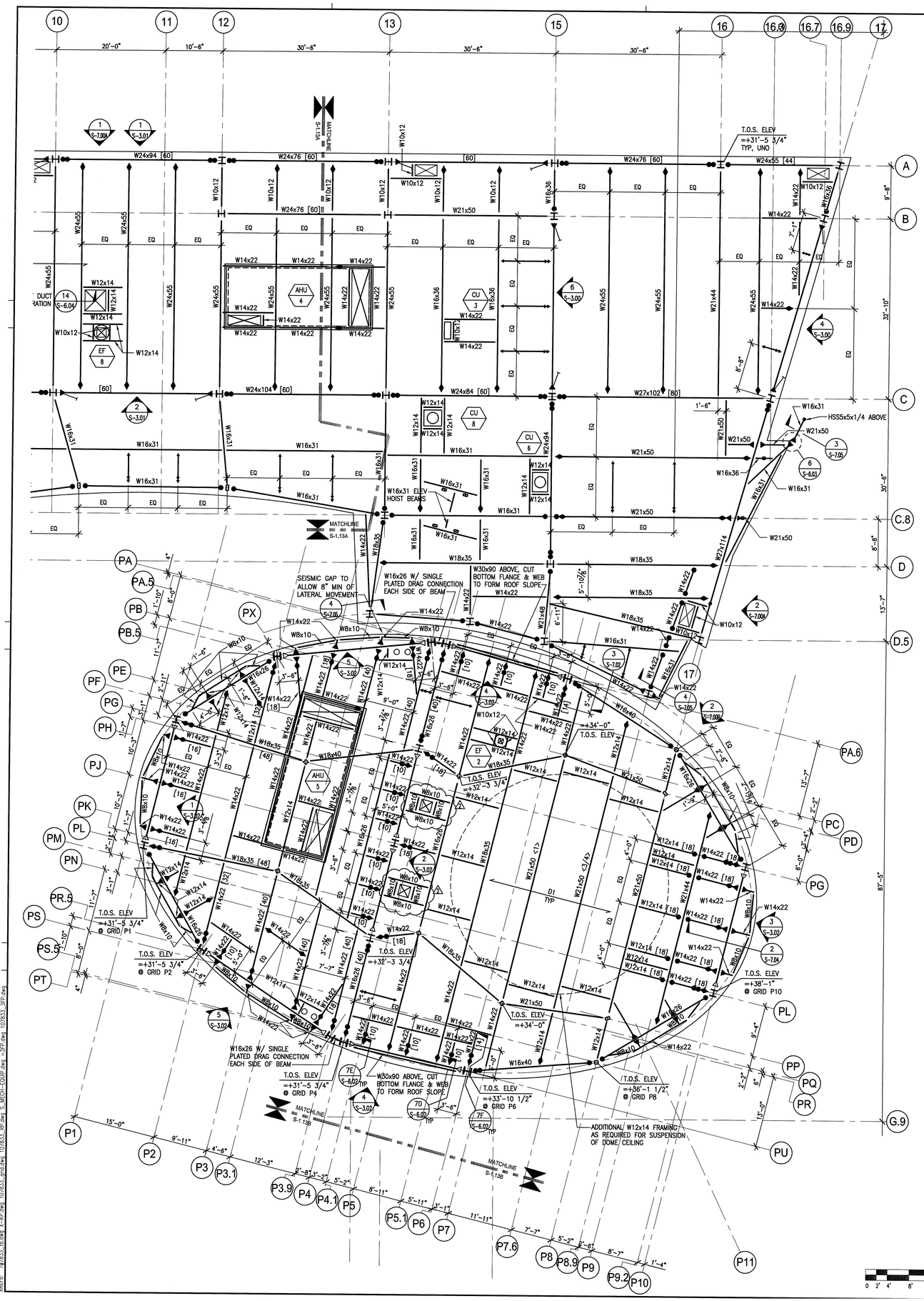

MECHANICAL EQUIPMENT SCHEDULE

ROOF EQUIPMENT	MAXIMUM OPERATING WEIGHT	UNIT ANCHORAGE
AHU 1	27,000#	1/S-6.10
AHU 2	22,000#	1/S-6.10
AHU 3	27,000#	1/S-6.10
AHU 4	24,000#	1/S-6.10
AHU 5	27,000#	1/S-6.10
AHU 6	6,000#	1/S-6.10
CU 1	524#	3/S-6.10
CU 3	258#	3/S-6.10
CU 4	275#	3/S-6.10
CU 5	275#	3/S-6.10
CU 6	275#	3/S-6.10
CU 7	490#	3/S-6.10
CU 8	490#	3/S-6.10
EF 1	580#	6/S-5.08
EF 2	130#	6/S-5.08
EF 3	230#	6/S-5.08
EF 4	420#	6/S-5.08
EF 5	185#	6/S-5.08
EF 6	200#	6/S-5.08
EF 7	200#	6/S-5.08
EF 8	200#	6/S-5.08
LEF 1	6,900#	1/S-6.10
LEF 2	6,900#	1/S-6.10
LEF 3	6,900#	1/S-6.10

ROOF FLOOR FRAMING PLAN NOTES:

1. INDICATES SPECIAL MOMENT FRAME BEAM, SEE S-3.02 AND S-6.15.
2. INDICATES BRACE FRAME BELOW.
3. D-1 INDICATES DECKING PER 1/S-6.01.
4. INDICATES LATERAL BRACE PER 7/S-6.00.
5. INDICATES SINGLE PLATED DRAG CONNECTION PER 1/S-6.03 & 3/S-6.03.
6. SEE S-6.00, S-6.01, S-6.02 AND S-6.04 FOR TYPICAL STEEL DETAILS.
7. SEE COLUMN SCHEDULE ON S-4.00, S-4.01, AND S-4.02 FOR COLUMN SIZES.
8. INDICATES GRAVITY MOMENT CONNECTION PER S-6.00.
9. INDICATES DOUBLE PLATED DRAG CONNECTION PER 1/S-6.03 & 3/S-6.03.
10. INDICATES FULL HEIGHT STIFFENERS AT CONNECTION PER 1C/S-6.00.
11. [X] INDICATES NUMBER OF 3/4"Øx5" WELDED STUDS PER 14/S-6.01. WHERE NOT INDICATED, PROVIDE 3/4"Øx5" AT MAX SPACING OF 12"OC AT ALL BEAMS AND GIRDERS.
12. BEAMS AROUND OPENINGS ARE 8" FROM EDGE OF OPENING, UNO.
13. <X> INDICATES BEAM CAMBER AT MIDSPAN.
14. WHERE THESE SYMBOLS ARE CALLED OUT ON A MOMENT FRAME BEAM OR A MOMENT FRAME COLUMN, PROVIDE LATERAL BRACING PER DETAIL 7/S-6.02.
15. REFER TO LAB/ FOOD SERVICE/ MEP DRAWINGS FOR MISCELLANEOUS HUNG EQUIPMENT.

KEY PLAN

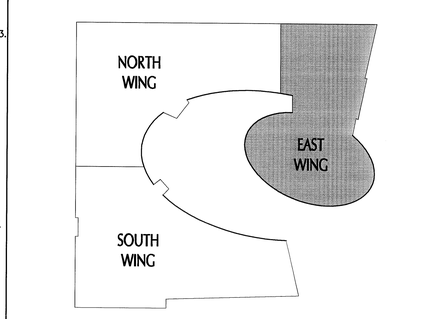

PARTIAL ROOF FRAMING PLAN - EAST WING

SCALE: 1/8" = 1'-0"

tBP architecture planning interiors management

tBP/Architecture
5455 Wilshire Boulevard, Suite 1200
Los Angeles, CA 90036-4242
ph: 323. 556. 3788 fx: 323. 556. 3799

architect

kpff Consulting Engineers
301 North Lake Avenue, Suite 550
Pasadena, California 91101
(626) 578-1921 Fax (626) 578-0921

consultant

IDENTIFICATION STAMP
DIV. OF THE STATE ARCHITECT
OFFICE OF REGULATION SERVICES
File No. 19-C11
Appl No. 03-112201
AC ____ FLS ____ SS ____
DATE ____

DSA Los Angeles Basin Regional Office
700 North Alameda Street, Suite 5-500
Los Angeles, California 90012
ph: 213/897-3995 fx: 213/897-3159/0726

agency

ANTELOPE VALLEY COLLEGE HEALTH & SCIENCE BUILDING

ANTELOPE VALLEY COMMUNITY COLLEGE DISTRICT
3041 WEST AVENUE K
LANCASTER, CA 93536-5426

owner

tBP project number: 2064L00
file name: S-113C.DWG
drawn by: SG checked by: GD
date: JULY 30, 2009 - 100% CD

Rev:	date:	description:
2	02-26-10	ADDENDUM #2

THIS DRAWING AND THE DESIGNS, DEPICTIONS, IDEAS AND OTHER INFORMATION CONTAINED HEREIN CONSTITUTE INTELLIGENT WORK OF tBP/ARCHITECTURE AND SHALL REMAIN THE PROPERTY OF tBP/ARCHITECTURE IN PERPETUITY. NO PART THEREOF SHALL BE REPRODUCED, DISCLOSED, DISTRIBUTED, SOLD, PUBLISHED OR OTHERWISE USED IN ANY WAY WITHOUT THE ADVANCED EXPRESS WRITTEN CONSENT OF tBP/ARCHITECTURE.

drawing title:
PARTIAL ROOF FRAMING PLAN - EAST WING

drawing no.:
S-1.13C

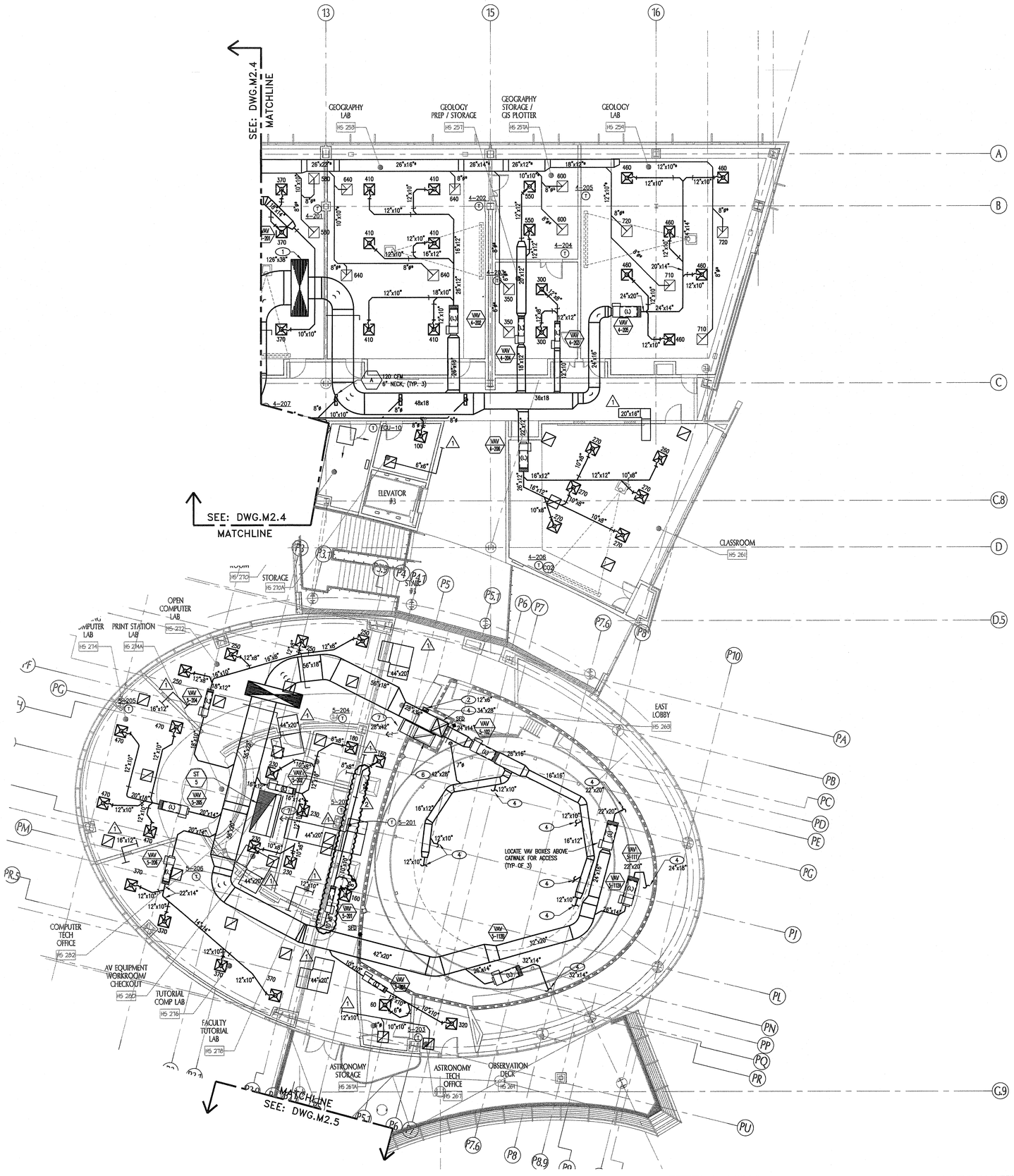

KEYNOTES

1. SUPPLY AIR DUCT UP THRU ROOF.
2. EXHAUST AIR DUCT UP THRU ROOF.
3. RETURN AIR DUCT UP THRU ROOF.
4. SUPPLY AIR DUCT DN.
5. EXHAUST AIR DUCT DN.
6. RETURN AIR DUCT DN.
7. RA OPENING WITH 1/2" WIRE MESH SCREEN.

KEY PLAN

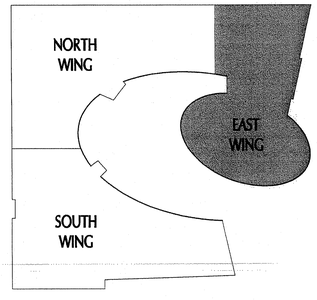

MECHANICAL PARTIAL SECOND FLOOR PLAN - EAST WING

SCALE: 1/8" = 1'-0"

0 2' 4' 8' 16'

NORTH

tBP
architecture
planning
interiors
management

tBP/Architecture
5455 Wilshire Boulevard, Suite 1200
Los Angeles, CA 90036-4242
ph: 323. 556. 3788 fx: 323. 556. 3799

architect

S&K ENGINEERS
421 EAST HUNTINGTON DRIVE
MONROVIA, CALIFORNIA 91016
626-930-1385 Fax: 626-930-1365
Job No. 07034

consultant

IDENTIFICATION STAMP
DIV. OF THE STATE ARCHITECT
OFFICE OF REGULATION SERVICES
File No. 19-C11
Appl No. 03-112201
AC ____ RS ____ SS ____
DATE ____

DSA Los Angeles Basin Regional Office
700 North Alameda Street, Suite 5-500
Los Angeles, California 90012
ph: 213/897-3995 fx: 213/897-3159/0726

agency

ANTELOPE VALLEY COLLEGE HEALTH & SCIENCE BUILDING

ANTELOPE VALLEY COMMUNITY COLLEGE DISTRICT
3041 WEST AVENUE K
LANCASTER, CA 93536-5426

owner

tBP project number : 20641.00
file name: A0-0101-FFP.dwg
drawn by: L.H. checked by: D.M.
date: July 30, 2009 - 100% CD

Rev:	date:	description:
1	11/16/09	ADDENDUM #1
2	2/26/10	ADDENDUM #2

THIS DRAWING AND THE DESIGNS, DEPICTIONS, IDEAS AND OTHER INFORMATION CONTAINED HEREIN CONSTITUTE UNPUBLISHED WORK OF tBP/ARCHITECTURE AND SHALL REMAIN THE PROPERTY OF tBP/ARCHITECTURE. IN PROPERTY, NO PART THEREOF SHALL BE REPRODUCED, DISCLOSED, DISTRIBUTED, SOLD, PUBLISHED OR OTHERWISE USED IN ANY WAY WITHOUT THE ADVANCED EXPRESS WRITTEN CONSENT OF tBP/ARCHITECTURE.

drawing title:
MECHANICAL PARTIAL SECOND FLOOR PLAN

drawing no:
M2.6

drawing x of x

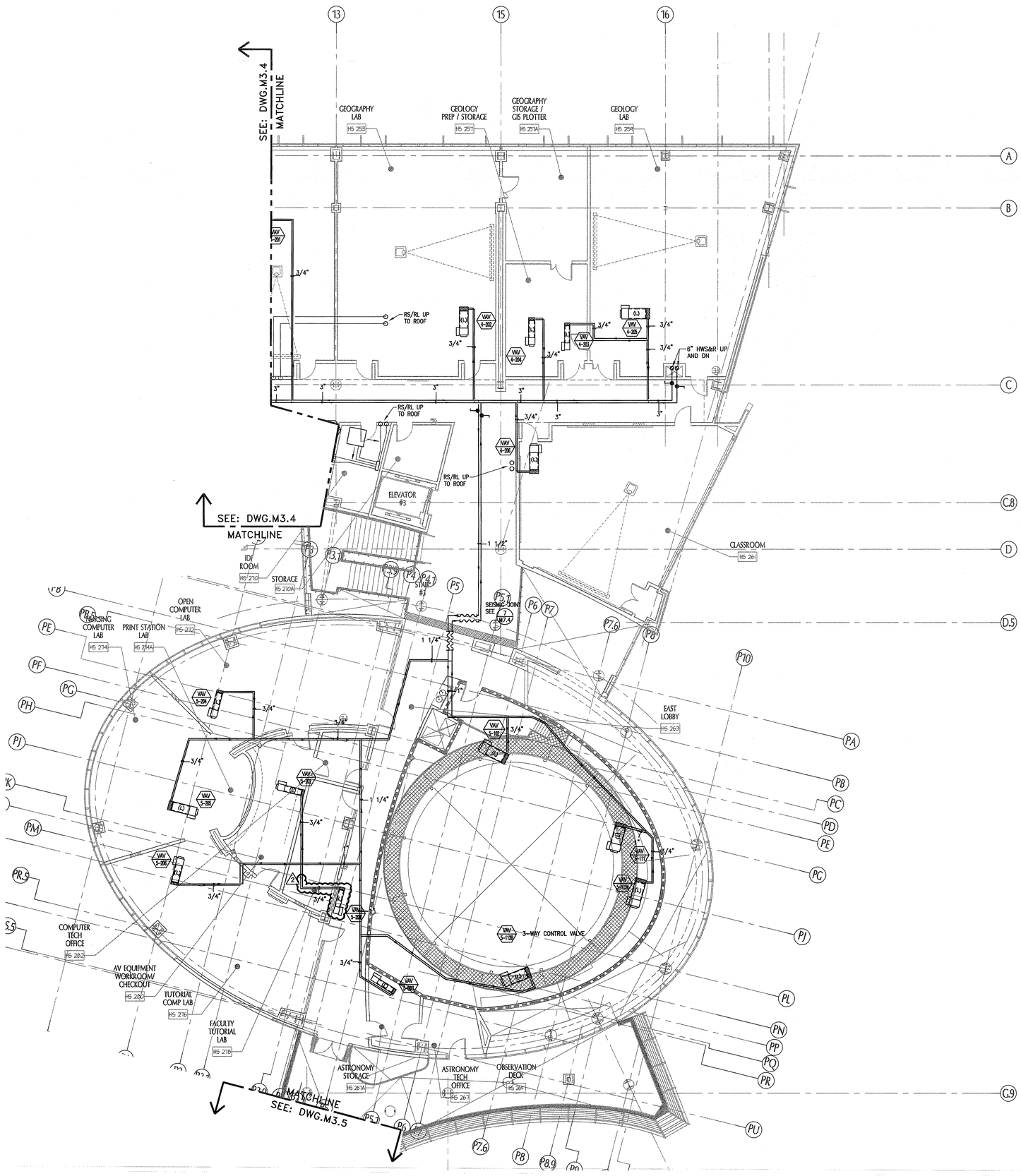

MECHANICAL PARTIAL SECOND FLOOR PLAN - EAST WING

SCALE: 1/8" = 1'-0"

0 2' 4' 8' 16'

NORTH

KEYNOTES

1 -

KEY PLAN

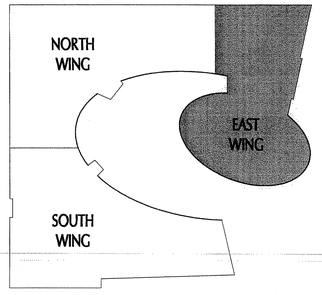

NORTH

tBP
architecture
planning
interiors
management

tBP/Architecture
5455 Wilshire Boulevard, Suite 1200
Los Angeles, CA 90036-4242
ph: 323. 556. 3788 fx: 323. 556. 3799

LICENSED ARCHITECT
STATE OF CALIFORNIA

architect

S&K ENGINEERS
421 EAST HUNTINGTON DRIVE
MONROVIA, CALIFORNIA 91016
626-930-1383 Fax: 626-930-1385
Job No: 07034

REGISTERED PROFESSIONAL ENGINEER
No. M-20430
Exp. 6/30/2010
MECHANICAL
STATE OF CALIFORNIA

consultant

IDENTIFICATION STAMP
DIV. OF THE STATE ARCHITECT
OFFICE OF REGULATION SERVICES

File No. 19-C11

Appl No. 03-112201

AC. ____ RS ____ SS ____

DATE ____

DSA Los Angeles Basin Regional Office
700 North Alameda Street, Suite 5-500
Los Angeles, California 90012
ph: 213/897-3995 fx: 213/897-3159/0726

agency

ANTELOPE VALLEY COLLEGE HEALTH & SCIENCE BUILDING

ANTELOPE VALLEY COMMUNITY COLLEGE DISTRICT
3041 WEST AVENUE K
LANCASTER, CA 93536-5426

owner

tBP project number : 2064L00

file name: A0-0101-FFP.dwg

drawn by: L.H. checked by: D.H.

date: July 30, 2009 - 100% CD

Rev:	date:	description:
2	2/26/10	ADDENDUM #2

THIS DRAWING AND THE DESIGNS, DEPICTIONS, IDEAS AND OTHER INFORMATION CONTAINED HEREIN CONSTITUTE UNPUBLISHED WORK OF BRYANCATECTURE AND SHALL REMAIN THE PROPERTY OF BRYANCATECTURE IN PERPETUITY. NO PART THEREOF SHALL BE REPRODUCED, DISCLOSED, DISTRIBUTED, SOLD, PUBLISHED OR OTHERWISE USED IN ANY WAY WITHOUT THE ADVANCED EXPRESS WRITTEN CONSENT OF BRYANCATECTURE.

drawing title:
SECOND FLOOR HVAC PIPING PLAN EAST WING

drawing no.:
M3.6

drawing x of x

GENERAL NOTES

1. PRIOR TO THE BID THE CONTRACTOR SHALL VERIFY THE EXACT LOCATIONS, ELEVATIONS, POINTS OF CONNECTIONS AND CHARACTERISTICS OF ALL UTILITY PIPING AND SHALL IMMEDIATELY NOTIFY THE ARCHITECT OF ANY DISCREPANCIES.
2. EXACT LOCATION AND MOUNTING HEIGHTS OF PLUMBING FIXTURES SHALL BE OBTAINED FROM THE ARCHITECTURAL DRAWINGS.
3. SEE ARCHITECTURAL DRAWINGS FOR ALL DISABLED ACCESS FIXTURE LOCATIONS AND MOUNTING HEIGHTS. INSULATE ALL EXPOSED EDGES, INCLUDING WATER SUPPLY PIPING, LOOSE KEY STOPS, AND DRAIN PIPING BELOW DISABLED ACCESS FIXTURES. ALL DESIGNATED FIXTURES SHALL BE ACCESSIBLE TO INDIVIDUALS WITH DISABILITIES IN ACCORDANCE WITH THE "AMERICANS WITH DISABILITIES ACT OF 1990 – FIXTURES AND THEIR INSTALLATION ANSI A117.1".
4. ALL PLUMBING WORK SHALL BE INSTALLED SO AS TO AVOID INTERFERENCE WITH OTHER TRADES.
5. CLEANOUTS SHALL BE PROVIDED AS REQUIRED BY CODE AND SHALL BE READILY ACCESSIBLE. THE CONTRACTOR SHALL COORDINATE ALL LOCATIONS WITH EQUIPMENT, CABINETS, ETC., WITH THE ARCHITECT PRIOR TO ANY INSTALLATION. ALL CLEANOUTS SHALL BE SIZED PER CODE.
6. EQUIPMENT ANCHORAGE
ANCHORAGE DETAILS FOR EQUIPMENT WHICH ARE NOT APPROVED DURING PLAN REVIEW ARE SUBJECT TO APPROVAL OF THE STRUCTURAL ENGINEER OF RECORD AND DSA STRUCTURAL ENGINEER PRIOR TO INSTALLATION AND INSPECTION, UNLESS SPECIFICALLY SHOWN ON THESE PLANS. NO STRUCTURAL MEMBER SHALL BE CUT, DRILLED NOR NOTCHED WITHOUT PRIOR WRITTEN AUTHORIZATION FROM THE STRUCTURAL ENGINEER AND DSA STRUCTURAL ENGINEER.
7. ALL PLUMBING FIXTURES, EQUIPMENT, TRIM AND FITTING SHALL COMPLY WITH LOCAL, STATE, AND FEDERAL REGULATIONS AND CODES, INCLUDING, BUT NOT LIMITED TO WATER AND ENERGY CONSERVATION CODES. THE SCHEDULED AND/OR SPECIFIED PLUMBING FIXTURES AND EQUIPMENT REPRESENT THE MINIMUM CRITERIA AND SHALL BE THE BASIS FOR THE CONTRACTOR'S BASE BID. IF THE SCHEDULED OR SPECIFIED FIXTURES OR EQUIPMENT DO NOT COMPLY WITH GOVERNING CODES OR REGULATIONS IN ALL RESPECTS, THE CONTRACTOR SHALL PROVIDE AN ALTERNATE BID FOR COMPLYING FIXTURES, EQUIPMENT, TRIM OR FITTINGS. THE ABSENCE OF AN ALTERNATE BID SHALL BE CONSTRUED TO MEAN THAT THE CONTRACTOR'S BID INCLUDES ALL COSTS NECESSARY TO MEET ALL REGULATION AND CODES.
8. ALL WASTE PIPING 3" & SMALLER & STORM/OVERFLOW PIPING SHALL SLOPE AT 2% UNLESS OTHERWISE INDICATED OR REQUIRED DUE TO STRUCTURAL CONDITIONS.
9. PROVIDE DIELECTRIC ISOLATION FITTINGS AT POINT OF CONNECTION OF ALL COPPER TUBING AND ANY DISSIMILAR METALS.
10. ALL NEW PIPING, INCLUDING WATER, WASTE, AND GAS, SHALL BE TESTED IN ACCORDANCE WITH THE CALIFORNIA PLUMBING CODE.
11. ALL HOT WATER PIPING SHALL BE INSULATED WITH MINIMUM THERMAL RESISTANCE OF R=4.0 PER INCH. THE INSULATION SHALL HAVE A FLAME SPREAD RATING OF NOT MORE THAN 25 AND SMOKE DEVELOPED RATING OF NOT MORE THAN 50, TYPE AND THICKNESS PER SPECIFICATIONS.
12. PROVIDE LOOSE KEY STOPS AT ALL FIXTURES.
13. EACH PLUMBING VENT SHALL TERMINATE NOT LESS THAN TEN (10) FEET FROM OR THREE (3) FEET ABOVE ANY WINDOW, DOOR, AIR INTAKE, OR VENT SHAFT, AND SHALL HAVE A VANDAL RESISTANT VENT CAP.
14. ALL HOSE BIBBS HAVE A NON–REMOVABLE VACUUM BREAKER.
15. CONTRACTOR SHALL PAY ALL FEES REQUIRED TO COMPLETELY INSTALL ALL EQUIPMENT, MATERIALS AND PIPING INDICATED IN CONTRACT DRAWINGS.
16. CONTRACTOR SHALL COORDINATE LOCATIONS OF ALL EXPOSED PIPING ON ROOF WITH ALL EQUIPMENT, CRICKETS AND RIDGE LINES AS SHOWN ON MECHANICAL, ELECTRICAL, AND ARCHITECTURAL DRAWINGS.
17. CONTRACTOR SHALL PROVIDE WATER HAMMERS, THREADED OR SOLDERED, UPSTREAM OF ALL FIXTURE STOPS ON HW & CW SUPPLY PIPING.
18. ALL BURRED ENDS OF WATER PIPING AND TUBING SHALL BE REAMED TO THE FULL BORE OF THE PIPE OR TUBE AND ALL CHIPS SHALL BE REMOVED (SEE CALIFORNIA PLUMBING CODE, 2007 EDITION, SECTION 310.3, ADDITIONALLY, TOOLS USED IN CUTTING OR REAMING SHALL BE KEPT FREE FROM OIL OR GREASE AND WHERE SUCH CONTAMINATION HAS OCCURRED, THE ITEMS AFFECTED SHALL BE REWORKED AND RINSED.
19. FOR PIPE PENETRATIONS THROUGH FIRE RATED FLOOR, WALL, AND PARTITIONS, PROVIDE FIRE STOP DEVICES AND PACKING IN COMPLIANCE WITH U.L. FIRE RESISTANCE DIRECTORY FOR THROUGH–PENETRATION FIRE STOP DEVICES (XHCR), SYSTEMS WL1001, WL1002, WL5001, WL5002 OR CAJ1001, CAJ5001, CAJ5002, CAJ5003 AS APPLICABLE.
20. CONTRACTOR SHALL REFER TO THE LABORATORY CONSULTANT'S CONTRACT DOCUMENTS & PROVIDE REQUIRED UTILITY SERVICES, ROUGH–INS & FINAL CONNECTION TO ALL FIXTURES, OUTLETS & EQUIPMENT, ETC. AS SCHEDULED & INDICATED ON THE PLANS.
21. ALL ROOF & OVERFLOW DRAIN PIPING SHALL TERMINATE 3" ABOVE GRADE WITH JR SMITH #1770 DOWNSPOUT NOZZLE, ZURN OR MIFAB. REFER TO ARCH. DETAILS 9 & 10/7.02

FIRE PROTECTION NOTES

ITEM 1: INSTALLING CONTRACTOR SHALL HAVE C–16 LICENSE FOR BUILDING FIRE PROTECTION.

ITEM 2: CODE COMPLIANCE:
THE COMPLETE AUTOMATIC FIRE PROTECTION SYSTEM SHALL ADHERE TO REQUIREMENTS OF APPLICABLE CODES. THESE INCLUDE, BUT ARE NOT LIMITED TO: N.F.P.A. 13 & 24; AND THE CITY OF LANCASTER FIRE DEPARTMENT.

ITEM 3: CRITERIA:
THE BUILDING AUTOMATIC FIRE SPRINKLER SYSTEM SHALL BE DESIGNED, SUBMITTED FOR REVIEW AND INSTALLED BY A LICENSED SPRINKLER CONTRACTOR UNDER A DEFERRED SUBMITTAL.

1. THE SPRINKLER SYSTEM SHALL COMPLY WITH N.F.P.A. 13, 2002 EDITION & NFPA 24, 2002 EDITION. OCCUPANCY CLASSIFICATION SHALL BE ORDINARY HAZARD, GROUP 2, WITH A DENSITY OF 0.20 GPM OVER 1500 SQ. FT.
2. INSTALLATION OF THE FIRE SPRINKLER SYSTEM SHALL NOT BE STARTED UNTIL COMPLETE PLANS, WATER SUPPLY INFORMATION, SPECIFICATIONS, SHOP DRAWINGS, HYDRAULIC CALCULATIONS, AND ALL REQUIRED DOCUMENTATION HAS BEEN REVIEWED AND APPROVED BY DSA AND THE CITY OF LANCASTER FIRE DEPARTMENT AND AUTHORITIES HAVING JURISDICTION.
3. AT VARIOUS STAGES AND UPON COMPLETION, THE SYSTEM SHALL BE TESTED IN THE PRESENCE OF THE CITY OF LANCASTER SITE INSPECTOR AND THE OWNER'S REPRESENTATIVE.

SEISMIC BRACING OF PLUMBING SYSTEMS

1. BRACING OF ALL DUCTS, PIPES, CONDUITS AND ANY OTHER SYSTEMS, SHALL MEET THE 2007 CBC AND TITLE 24 REQUIREMENTS AND ASCE 7–05 CHAPTER 13. SYSTEMS SHALL BE BRACED IN ACCORDANCE WITH THE LATEST ISSUE OF THE INTERNATIONAL SEISMIC APPLICATION TECHNOLOGY (ISAT) DESIGN STANDARD OPA–0435, OR MASON INDUSTRIES OPA–0349.
2. INDEPENDENTLY ENGINEERED SYSTEMS MAY ALSO BE UTILIZED IF DESIGNED AND STAMPED BY A LICENSED CALIFORNIA STRUCTURAL ENGINEER AND REVIEWED AND APPROVED BY DSA.
3. SHOP DRAWINGS SHOWING ALL BRACING LOCATIONS AND DETAILS OF CONNECTIONS ARE REQUIRED FOR ALL SYSTEMS.

APPLICABLE CODES

2007 CALIFORNIA BUILDING STANDARDS ADMINISTRATIVE CODE, PART 1, TITLE 24 C.C.R.

2007 CALIFORNIA BUILDING CODE, PART 2, TITLE 24 C.C.R. (2006 INTERNATIONAL BUILDING CODE WITH 2007 CALIFORNIA AMENDMENTS)

2007 CALIFORNIA ELECTRICAL CODE, PART 3, TITLE 24 C.C.R. (2005 NATIONAL ELECTRICAL CODE WITH 2007 CALIFORNIA AMENDMENTS)

2007 CALIFORNIA MECHANICAL CODE, PART 4, TITLE 24 C.C.R. (2006 UNIFORM MECHANICAL CODE WITH 2007 CALIFORNIA AMENDMENTS)

2007 CALIFORNIA PLUMBING CODE, PART 5, TITLE 24 C.C.R. (2006 UNIFORM PLUMBING CODE WITH 2007 CALIFORNIA AMENDMENTS)

2007 CALIFORNIA ENERGY CODE, PART 6, TITLE 24 C.C.R.

2007 CALIFORNIA FIRE CODE, PART 9, TITLE 24 C.C.R.

2007 CALIFORNIA REFERENCE STANDARDS CODE, PART 12, TITLE 24 C.C.R.

FIRE PROTECTION LEGEND

SYMBOL	ABBREV	DESCRIPTION
F	F	FIRE WATER SUPPLY
AS	AS	AUTOMATIC FIRE SPRINKLER PIPING
D	D	DRAIN PIPING
IV	IV	LISTED INDICATING VALVE
D	D	DRAIN VALVE
	SOV	SHUT OFF VALVE
	CV	CHECK VALVE
	ASR	SPRINKLER RISER
A	AV	ALARM CHECK VALVE
	FLG	FLANGE
E	EAB	ELECTRIC ALARM BELL
	PG	PRESSURE GAUGE WITH COCK
F	FLS	FLOW SWITCH
PS	PS	PRESSURE SWITCH
	TS	TAMPER SWITCH

PIPE MATERIAL SCHEDULE

PIPE	ABV GRADE	BEL GRADE	REMARKS
SANITARY SOIL; WASTE GREASE WASTE, VENT & STORM DRAIN	NO–HUB CAST IRON & COUPLINGS W/STN. STL. BAND FTGS.	NO–HUB CAST IRON W/M.G. COUPLINGS	
DOMESTIC, INDUSTRIAL, TEMPERED, LABORATORY AIR & VACUUM	TYPE "L" COPPER W/LEAD–FREE SOLDERED FTGS.	TYPE "K" COPPER W/LEAD–FREE SOLDERED FTGS.	
PURIFIED WATER SYSTEM	SCHEDULE 80 VIRGIN UNPIGMENTED POLYPROPYLENE PIPE & FITTINGS	–	
LABORATORY WASTE & VENT	SCHEDULE 40 FLAME–RETARDANT POLYPROPYLENE W/FUSED & MECHANICAL JOINTS	SCHEDULE 40 FLAME–RETARDANT POLYPROPYLENE W/FUSED & MECHANICAL JOINTS	
NATURAL GAS	SCHEDULE 40 BLACK STEEL W/THREADED & WELDED FITTINGS	MEDIUM DENSITY POLYETHELENE, PE2406 WITH HEAT FUSION FITTINGS	

2

ABBREVIATIONS

@	AT	GAL	GALLONS
ABV	ABOVE	GPH	GALLONS PER HOUR
ADA	AMERICANS WITH DISABILITIES ACT	GPM	GALLONS PER MINUTE
AFF	ABOVE FINISHED FLOOR	GRD	GRADE OR GROUND
AP	ACCESS PANEL	GPF	GALLONS PER FLUSH
ARCH	ARCHITECT/ARCHITECTURAL	HDR	HEADER
BEH	BEHIND	HP	HORSE POWER
BEL	BELOW	HTR	HEATER
BLDG	BUILDING	IE	INVERT ELEVATION
CFH	CUBIC FEET PER HOUR	MAX	MAXIMUM
CFM	CUBIC FEET PER MINUTE	MECH.	MECHANICAL
CLG	CEILING	MIN	MINIMUM
CONC	CONCRETE	PP	POLYPROPYLENE
CONN	CONNECT/CONNECTION	PRESS	PRESSURE
CONT	CONTINUED/CONTINUATION	P.S.I	POUNDS PER SQUARE INCH
DIA (Ø)	DIAMETER	PVC	POLYVINYL CHLORIDE
DN	DOWN	R.I. & C	ROUGH–IN & CONNECT
DWG(S)	DRAWING(S)	SHT	SHEET
EA	EACH	TEMP	TEMPERATURE
EQUIP	EQUIPMENT	THRU	THROUGH
FFE	FINISHED FLOOR ELEVATION	TYP	TYPICAL
FIN	FINISH	UL	UNDERWRITERS' LABORATORIES
FLR	FLOOR	VTR	VENT THRU ROOF
FR	FROM	W/	WITH
FTG(S)	FITTING(S)		

GAS CALCULATIONS

2

A. NUTRITION/FOOD LAB EQUIPMENT AND APPLIANCE (4 @ 135 & 1 @ 240)— 780 CFH
B. DRYER— — — — — — — — — — — — — 23 CFH
C. WATER HEATER (3 @ 120)— — — — — — — — — 360 CFH
D. GAS TURRETS (171 @ 3)— — — — — — — — — 513 CFH
E. FIXTURE CAFE/KITCHEN— — — — — — — — — 1000 CFH
GRAND TOTAL CONNECTED LOAD— — — — — — — — 2676 CFH

PIPE SIZE	(1) CFH
1/2"	22
3/4"	46
1"	86
1–1/4"	177
1–1/2"	266
2"	512
2–1/2"	816
3"	1440
4"	2940

NOTE: SYSTEM LENGTH = 450 FT., 0.5" WC

PLUMBING LEGEND

SYMBOL	ABBREV	DESCRIPTION
	S OR W	SEWER OR WASTE BEL. FLR. OR GRD.
	S OR W	SEWER OR WASTE ABV. FLR. OR GRD.
GW	GW	GREASE WASTE LINE
	V	VENT LINE
CD	CD	CONDENSATE DRAIN
	CW	COLD WATER
	HW	HOT WATER
	HWR	HOT WATER RETURN
MPG	MPG	MEDIUM PRESSURE GAS (5 PSIG)
G	G	GAS LINE (9" W.C)
LVAC	LV	LABORATORY VACUUM
A100	A100	COMPRESSED AIR (100 PSIG)
LW	LW	LABORATORY WASTE ABOVE GRADE
LW	LW	LABORATORY WASTE BELOW GRADE
LV	LV	LABORATORY VENT
SD	SD	STORM ABOVE GRADE
OD	OD	OVERFLOW ABOVE GRADE
SD	SD	STORM ABOVE GRADE
OD	OD	OVERFLOW ABOVE GRADE
SCW	SCW	SOFT COLD WATER
ICW	ICW	INDUSTRIAL COLD WATER
IHW	IHW	INDUSTRIAL HOT WATER
IHWR	IHWR	INDUSTRIAL HOT WATER RETURN
PW	PW	PURIFIED WATER
PWR	PWR	PURIFIED WATER RETURN
TW	TW	TEMPERED WATER (85°F)
TWR	TWR	TEMPERED WATER RETURN (75°F)
TP	TP	TRAP PRIMER LINE
CAI	CAI	COMPRESSED AIR INTAKE
LAI	LAI	LABORATORY AIR INTAKE
LVE	LVE	LABORATORY VACUUM EXHAUST
CA	CA	COMPRESSED AIR (50 PSI)
	FD	FLOOR DRAIN
	FS	FLOOR SINK (HALF–GRATE)
	COYB	CLEANOUT IN YARD BOX
	FCO	FLOOR CLEANOUT
	WCO	WALL CLEANOUT BEHIND ACCESS PANEL
	IWR	INDIRECT WASTE RECEPTOR
	CO	CLEANOUT
	TP	TRAP PRIMER
	SOVYB	SHUT–OFF VALVE IN YARD BOX (BALL TYPE)
	SOV	SHUT–OFF VALVE (BALL TYPE)
	SOV	SHUT–OFF VALVE (BUTTERFLY TYPE)
	HB	HOSE BIBB
	HYB	HYDRANT BOX
S	SV	SOLENOID VALVE
	GV	GAS VALVE
	GPR	GAS PRESSURE REGULATOR
	DV	DIAPHRAGM VALVE
	U	UNION
	CV	CHECK VALVE
P	POPRV	PILOT OPERATED PRESSURE REDUCING VALVE
	PG	PRESSURE/VACUUM GAUGE
	TH	THERMOMETER
	–	DIRECTION OF FLOW IN LINE
	–	CAP OR PLUG
	–	KEYNOTE
	–	REFERENCE DETAIL
	POC	POINT OF CONNECTION
	POD	POINT OF DISCONNECT

FIXTURE SCHEDULE

SYMBOL	FIXTURE	BRANCH CONNECTION					DESCRIPTION
		WASTE	TRAP	VENT	COLD	HOT	
WC–1	WATER CLOSET	4"	INTEGRAL	2"	1–1/2"	–	AMERICAN STANDARD "AFWALL" #2257.103 WALL HUNG, SLOAN #8111 BATTERY OPERATED FLUSH VALVE, J.R. SMITH 200 OR 400 SERIES CARRIER, CHURCH #9500C OPEN FRONT SEAT
WC–2	WATER CLOSET (ADA)	4"	INTEGRAL	2"	1–1/2"	–	AMERICAN STANDARD "AFWALL" #2257.103 WALL HUNG, SLOAN #8111 BATTERY OPERATED FLUSH VALVE, J.R. SMITH 200 OR 400 SERIES CARRIER, CHURCH #9500C OPEN FRONT SEAT MOUNT AT ADA HEIGHT
UR–1	URINAL	2"	INTEGRAL	1–1/2"	1–1/4"	–	SLOAN "HEU" SYSTEM #WEUS–1002.1401–0.25–G2, VITREOUS CHINA URINAL WITH 0.25 GPF BATTERY OPERATED FLUSH VALVE. J.R. SMITH 600 SERIES CARRIER
UR–2	URINAL (ADA)	2"	INTEGRAL	1–1/2"	1–1/4"	–	SAME AS UR–1 EXCEPT MOUNT AT ADA HEIGHT
L–1	LAVATORY (ADA)	4"	1–1/4" X 1–1/2"	1–1/2"	1/2"	1/2"	AMERICAN STANDARD "OVALYN" #0496.221, 19–1/4"x16–1/4"x7–3/16" UNDER COUNTER MOUNT, TECHNICAL CONCEPT "MILANO AUTO FAUCET" #500615, BATTERY OPERATED SINGLE HOLE, CONTROL MODULE, THERMOSTATIC MIXING VALVE & HOSE SUPPLIES, WITH 0.5 GPM FLOW CONTROL. CHICAGO FAUCET #1013–CP LOOSE KEY ANGLE STOP & #327–ACP GRID DRAIN, 1–1/4"x1–1/2" P–TRAP. INSULATE TRAP, TRAP ARM & SUPPLIES.
S–1	SINK (ADA)	2"	1–1/2"	1–1/2"	3/4"	3/4"	JUST MANUFACTURING COMPANY "STYLIST" SLF–ADA–1617–A–GR, 16"x17"x6", SINGLE HOLE, 18 GA. TYPE 304 STAINLESS STEEL, TECHNICAL CONCEPT "VENETIAN DECK MOUNTED AUTO FAUCET" #500609. BATTERY OPERATED CONTROL MODULE, MIXING VALVE & HOSE SUPPLIES. CHICAGO FAUCET #1013–CP LOOSE KEY ANGLE STOPS, JUST #J35SSF GRID DRAIN, 1–1/2" P–TRAP. INSULATE TRAP, TRAP ARM & SUPPLIES
S–2	SINK (ADA)	2"	1–1/2"	1–1/2"	3/4"	3/4"	SAME AS S–1, EXCEPT USE #SLF–ADA–2125–A–GR, 21"x25"x6"
S–3	SINK	2"	1–1/2"	1–1/2"	3/4"	3/4"	SAME AS S–4, EXCEPT PROVIDE JUST MANUFACTURING COMPANY "STYLIST" #SLF–1617–A–GR
S–4	SINK	2"	1–1/2"	1–1/2"	3/4"	3/4"	JUST MANUFACTURER COMPANY "STYLIST" SLF–2125–A–GR, 21"x25"x8", SINGLE HOLE, 18 GAUGE, TYPE 304 STAINLESS STEEL. CHICAGO FAUCET #626–GN8A GOOSENECK SWING SPOUT, #625–LPSLOCP FOOT PEDAL VALVE & #1771 LOOSE KEY VALVES. JUST #J35–SSF GRID DRAIN, 1–1/2" P–TRAP
DF–1	DRINKING FOUNTAIN (ADA)	2"	1–1/2"	1–1/2"	1/2"	–	ACORN "AQUA CONTOUR #A132408B–SO, DUAL HEIGHT BUBBLER SENSOR OPERATED, 18 GA, TYPE 304 STAINLESS STEEL, 8 GPH CAPACITY 115V, 1ϕ
SS–1	SERVICE SINK	3"	3"	2"	3/4"	3/4"	CECO #871, FLOOR MOUNTED, CORNER TYPE WITH #B71–3" DRAIN, #B–872 RIM GUARD, CHICAGO FAUCET #956–R, VACUUM BREAKER & VINYL HOSE.
FD–1	FLOOR DRAIN	2"	2"	1–1/2"	1/2"	–	J.R. SMITH #2005–A, DUCO CAST IRON WITH 5"Ø OR 8"Ø NICKEL BRONZE GRATE & TP CONN.
FS–1	FLOOR SINK	2"	2"	1–1/2"	1/2"	–	J.R. SMITH #3100–Y, DUCO CAST IRON, ACID RESISTANT INTERIOR, 8–1/2" TOP WITH 1/2" GRATE & TP CONN.
IWR–1	INDIRECT WASTE RECEPTOR	3"	3"	2"	–	–	J.R. SMITH #3960–Y, DUCO CAST IRON, SOLID WATER DAM
RD–1	ROOF DRAIN	–	–	–	–	–	J.R. SMITH #1010–YRC, DUCO CAST IRON, SUMP RECEIVER, UNDERDECK CLAMP. SEE PLAN FOR SIZE
OD–1	OVERFLOW DRAIN	–	–	–	–	–	J.R. SMITH #1080–YRC, DUCO CAST IRON, SUMP RECEIVER, UNDERDECK CLAMP, SOLID WATER DAM. SEE PLAN FOR SIZE
AD–1	AREA DRAIN	–	–	–	–	–	J.R. SMITH #1470–Y, DUCO CAST IRON, SUMP RECEIVER, NICKEL BRONZE TOP. SEE PLANS FOR SIZE
HB–1	HOSE BIBB	–	–	–	3/4"	–	ACORN #8121–CP WITH VACUUM BREAKER
HB–2	HOSE BIBB	–	–	–	3/4"	–	J.R. SMITH #5810, 3/4", NON–FREEZE, BRONZE HYDRANT BOX WITH T–HANDLE KEY. PROVIDE 6"Ø x 24" HIGH CRUSH STONE OR GRAVEL AROUND DRAIN HOLE. PROVIDE WITH VACUUM BREAKER
TP–1	TRAP PRIMER	–	–	–	1/2"	–	PPP INC, PR–500 WITH DISTRIBUTION BOX AS REQUIRED 1/2" TP CONN. TO FD–1 & FS–1
TMV–1	THERMOSTATIC MIXING VALVE	–	–	–	1–1/2"	1–1/2"	POWERS #MM432 VALVE, WITH GAUGE & THERMOMETER. PROVIDE 1–1/2" TW OUTLET

DOMESTIC WATER CALCULATIONS

A. CAMPUS WATER PRESSURE— — — — — — — — — — —140
B. PRESSURE DOWNSTREAM OF 4" BACKFLOW PREVENTER @ 160 GPM, PSI— — — —12
C. PRESSURE REGULATOR SET @ PSI— — — — — — — — —76
D. PRESSURE REGULATOR, PSI— — — — — — — — — —1.5
E. PRESSURE LOSSES
 1. LOSS DUE TO BUILDING HEIGHT
  20 FT X 0.43, PSI— — — — — — — — — — —8.6
 2. PRESSURE REQ. AT MOST REMOTE OUTLET, PSI— — — — —25
 3. TOTAL PRESSURE LOSSES, PSI— — — — — — — — —33.6
F. PRESSURE LEFT TO OVERCOME FRICTION, PSI— — — — — —42.4
G. TOTAL DEVELOPED LENGTH— — — — — — — — — —410
H. 410 FT X 1.5 FITTINGS, FEET — — — — — — — — —615
I. AVAILABLE FRICTION HEAD LOSS PER 100 FT
 42.4 PSI X 100 FT., PSI — — — — — — — — — —6.89
 615 FT.
USE 3 PSI/100 FT.

PIPE SIZE	FV FU	FT FU	VEL FPS
1/2"	–	1.5	2.5
3/4"	–	5	3.3
1"	–	8	3.9
1–1/4"	–	24	4.6
1–1/2"	10	46	5
2"	44	115	5
2–1/2"	116	236	5
3"	295	431	5
4"	775	809	5

NOTE:
1. MAX. VELOCITY = 5 FEET PER SECOND

INDUSTRIAL WATER CALCULATIONS

A. CAMPUS WATER PRESSURE— — — — — — — — — — —140
B. PRESSURE DOWNSTREAM OF 4" BACKFLOW PREVENTER @ 160 GPM, PSI— — — —12
C. PRESSURE REGULATOR SET @ PSI— — — — — — — — —76
D. PRESSURE REGULATOR, PSI— — — — — — — — — —1.5
E. PRESSURE LOSSES
 1. LOSS DUE TO BUILDING HEIGHT
  20 FT X 0.43, PSI— — — — — — — — — — —8.6
 2. WATER SOFTENER, PSI— — — — — — — — — —15
 3. 2–1/2" BACKFLOW PREVENTER @ 66 GPM, PSI— — — — —11
 4. PRESSURE REQ. AT MOST REMOTE OUTLET, PSI— — — — —15
 5. TOTAL PRESSURE LOSSES, PSI— — — — — — — — —49.6
F. PRESSURE LEFT TO OVERCOME FRICTION, PSI— — — — — —26.4
G. TOTAL DEVELOPED LENGTH— — — — — — — — — —560
H. 560 FT X 1.5 FITTINGS, FEET — — — — — — — — —840
I. AVAILABLE FRICTION HEAD LOSS PER 100 FT
 426.4 PSI X 100 FT., PSI— — — — — — — — — —3.14
 840 FT.
USE 3 PSI/100 FT.

PIPE SIZE	FV FU	FT FU	VEL FPS
1/2"	–	1.5	2.5
3/4"	–	5	3.3
1"	–	8	3.9
1–1/4"	–	24	4.6
1–1/2"	10	46	5
2"	44	115	5
2–1/2"	116	236	5
3"	295	431	5
4"	775	809	5

NOTE:
1. MAX. VELOCITY = 5 FEET PER SECOND

tBP
architecture
planning
interiors
management

LICENSED ARCHITECT · STATE OF CALIFORNIA · NO. C8074 · REN. 4-30-11

tBP/Architecture
5455 Wilshire Boulevard, Suite 1200
Los Angeles, CA 90036-4242
ph: 323. 556. 3788 fx: 323. 556. 3799
architect

S&K ENGINEERS
421 EAST HUNTINGTON DRIVE
MONROVIA, CALIFORNIA 91016
626-930-1383 Fax: 626-930-1385
Job No: 07034

REGISTERED PROFESSIONAL ENGINEER · JOHN G. HOLLAND · No. M–20430 · Exp. 6/30/2010 · MECHANICAL · STATE OF CALIFORNIA
consultant

IDENTIFICATION STAMP
DIV. OF THE STATE ARCHITECT
OFFICE OF REGULATION SERVICES
File No. 19-C11
Appl No. 03-112201
AC____ FLS ____ SS ____
DATE ____

DSA Los Angeles Basin Regional Office
700 North Alameda Street, Suite 5-500
Los Angeles, California 90012
ph: 213/897-3995 fx: 213/897-3159/0726
agency

ANTELOPE VALLEY COLLEGE
HEALTH & SCIENCE BUILDING
ANTELOPE VALLEY COMMUNITY COLLEGE DISTRICT
3041 WEST AVENUE K
LANCASTER, CA 93536-5426
owner

tBP project number : 20641.00
file name: AO-0101-IFP.dwg
drawn by: M.G. checked by: R.V.
date: July 30, 2009 - 100% CD

Rev.	date	description
2	2/26/10	ADDENDUM #2

THIS DRAWING AND THE DESIGNS, DEPICTIONS, IDEAS AND OTHER INFORMATION CONTAINED HEREIN CONSTITUTE UNPUBLISHED WORK OF tBP/ARCHITECTURE AND SHALL REMAIN THE PROPERTY OF tBP/ARCHITECTURE IN PERPETUITY. NO PART THEREOF SHALL BE REPRODUCED, DISCLOSED, DISTRIBUTED, SOLD, PUBLISHED OR OTHERWISE USED IN ANY WAY WITHOUT THE ADVANCED EXPRESS WRITTEN CONSENT OF tBP/ARCHITECTURE.

drawing title:
PLUMBING LEGENDS, NOTES, & SCHEDULES

drawing no:
P0.1

drawing 1 of 16

WATER HEATER SCHEDULE

SYMBOL (WH / –)	LOCATION	SERVICE	MANUFACTURER & MODEL NO.	BTU INPUT	RECOVERY AT △T	WATER TEMP °F IN	WATER TEMP °F OUT	OPER. WT. (LBS.)	ANCHORAGE	REMARKS
WH–1	PLUMBING ROOM	DOMESTIC HOT WATER	RAYPAK HI–DELTA WH–122	120	206	60	120	186	5/S508	LOW NOX, CUPRO NICKEL HEAT EXCHANGER, 125 PSI, ON/OFF FIRE MODE, SINGLE STAGE CONTROLLER, IN–LINE, FLOW SWITCH, FAN ASSISTED W/CIRCULATING PUMP & 4" FLUE. PROVIDE DRY CONTACTS FOR ON/OFF STATUS
WH–2	PLUMBING ROOM	INDUSTRIAL HOT WATER	RAYPAK HI–DELTA WH–122	120	206	60	120	186	5/S508	LOW NOX, CUPRO NICKEL HEAT EXCHANGER, 125 PSI, ON/OFF FIRE MODE, SINGLE STAGE CONTROLLER, IN–LINE, FLOW SWITCH, FAN ASSISTED W/CIRCULATING PUMP & 4" FLUE. PROVIDE DRY CONTACTS FOR ON/OFF STATUS

BACKFLOW PREVENTER SCHEDULE

SYMBOL (BFP / –)	LOCATION	SERVICE	MANUFACT. & MODEL #	SIZE	CAPACITY GPM	CAPACITY PSI LOSS	REMARKS
BFP–1	MECH. ROOM	NON–POTABLE COLD WATER	CLA–VAL #RP8L	2–1/2"	63	9.0	REDUCE PRESSURE TYPE. PROVIDE AIR GAP FITTING & RUN DRAIN TO FLOOR SINK. △1
BFP–2	MECH. ROOM	RO/DI WATER	CLA–VAL #RP6L	3/4"	5	10.0	REDUCE PRESSURE TYPE. PROVIDE AIR GAP FITTING & RUN DRAIN TO FLOOR SINK. △1
BFP–3	GREENHOUSE	NON POTABLE COLD WATER	CLA–VAL #RP6L	1"	9	10.0	REDUCE PRESSURE TYPE

WATER SOFTENER SCHEDULE

SYMBOL (WS / –)	LOCATION	MANUFACTURER & MODEL NO.	SOFTENER DIA./ O.A.L. INCHES	SOFTENER DESIGN FLOW GPM	SOFTENER WATER HARD–NESS AS CACO3 (1)	SOFTENER FT³ OF EXCHANGE RESIN @ 20,000 GRAINS/FT³ (2)	SOFTENER GAL. PER REGEN–ERATION	SOFTENER FACE PIPING SIZE IN.	SOFTENER METER SIZE IN.	SOFTENER BACK–WASH FLOW–RATE GPM	SOFTENER MAX. LOSS METER PSI (3)	SOFTENER MAX. LOSS INLET TO OUTLET PSI (3)	BRINE TANK SIZE DIA/ HEIGHT INCHES	BRINE TANK SALT CAP LBS.
WS–1	MECH. ROOM	CULLIGAN #HS–300–2	24" x 73"	65	–	10	–	2"	–	15	–	15	30" x 48"	1200

(1) CONTRACTOR/VENDOR TO VERIFY GRAINS PER GALLON (GG).
(2) 6 LBS. OF SALT PER CUBIC FOOT OF EXCHANGE RESIN – REGENERATION.
(3) AT DESIGN FLOW GPM
NOTES: PROVIDE DRY CONTACT FOR ON/OFF STATUS
FOR ANCHORAGE REFER TO DETAIL 2/S509

TANK SCHEDULE

SYMBOL (T / –)	LOCATION	SERVICE	MANUFACT. & MODEL #	TYPE	STORAGE CAPACITY	SIZE	OPER. WT.(LBS)	OPER. PRESS. PSIG	ANCHORAGE/ DETAIL	REMARKS
T–1	PLUMBING ROOM	DOMESTIC HOT WATER	RAYPAK ITEM #4	CEMENT LINED STEEL	235	30"ø x 92"	2755	125	1/S–5.09	VERTICAL, ASME RATED CEMENT LINED
T–2	PLUMBING ROOM	DOMESTIC HOT WATER	AMTROL #ST–20V–C	DIAPHRAGM TYPE	7.6	12"ø x 19"	112	125	1/S–5.09	ASME RATED
T–3	PLUMBING ROOM	INDUSTRIAL HOT WATER	RAYPAK ITEM #10	CEMENT LINED STEEL	534	42"ø x 104"	5860	125	1/S–5.09	VERTICAL, ASME RATED CEMENT LINED
T–4	PLUMBING ROOM	INDUSTRIAL HOT WATER	AMTROL #ST–42V–C	DIAPHRAGM TYPE	17.5	16"ø x 24"	244	125	1/S–5.09	ASME RATED
T–5	OUTDOOR	LABORATORY WASTE	ORION STYLE 4	HIGH DENSITY POLYETHYLENE	200	36"ø x 53"	8000	–	8/P6.1	W/SAMPLING BOX & PH MONITOR
T–6	OUTDOOR	GREASE WASTE	JENSEN #JP500–EE–G	PRE–CAST CONCRETE	500	6'–0" x 4'–0" x 5'–10"	4200	–	6/P6.1	W/SAMPLING BOX
									△1	

AIR DRYER SCHEDULE

SYMBOL (– / –)	LOCATION	MANUFACTURER & MODEL NO.	AIR CAP (SCFM)	TEMP °F	PRESS PSIG	DEW POINT TEMP °F	MOTOR (EACH) HP	MOTOR (EACH) RPM	MOTOR (EACH) VOLTS	MOTOR (EACH) PH	MOTOR (EACH) HZ	ANCHORAGE/ DETAIL	REMARKS
LAD–1	MECHANICAL/PLUMBING ROOM HS143	BEACON MEDAES #LLD55S–RK	55	100	100	10	–	–	120	1	60	9/S–5.08	DESICCANT TYPE, SIMPLEX, W/PIPE FILTER/AUTOMATIC DRAIN, AFTER FILTER, DEWPOINT MONITOR, REGULATOR. SET REGULATOR @ 105 PSIG

EQUIPMENT SCHEDULE (ROUGH–IN & CONNECT)

SYMBOL (– / –)	EQUIPMENT	BRANCH CONNECTION IND. W	WASTE	TRAP	VENT	COLD	HOT	MISC. G	REMARKS
HU–1	HEADWALL UNIT	–	–	–	–	–	–	(2) CA (1) LV	CONN. (1) CA TO O2, (1) CA TO MA & (1) LV TO MV @ TOP OF UNIT
W–1	WASHER	–	2"	2"	1–1/2"	3/4"	3/4"	–	PROVIDE GUY GRAY #B–200 WASHING MACHINE BOX. MAKE FINAL CONN. W/HOSES
D–1	DRYER	–	–	–	–	–	–	1/2" G	PROVIDE SOV & AGA FLEX CONNECTOR. MAKE FINAL CONN.
IM–1	ICE MAKER	1/2"	–	–	–	1/2"	–	–	PROVIDE SOV & IN–LINE FILTER. MAKE FINAL CONN. SPILL IW OVER FLOOR SINK △2

PUMP SCHEDULE

SYMBOL (CP / –)	LOCATION	SERVICE	MANUFACTURER	PUMP CAPACITY MODEL	PUMP CAPACITY GPM	PUMP CAPACITY HEAD	SUCTION HEAD/FT.	MOTOR CAPACITY HP	MOTOR CAPACITY RPM	MOTOR CAPACITY VOLTS	MOTOR CAPACITY PH	MOTOR CAPACITY HZ	REMARKS
CP–1	MECH. ROOM	DOMESTIC HOT WATER	BELL & GOSSETT	PL–36	13.7	25 FT	–	1/6	1725	120	1	60	BRONZE, 1–1/4" IN–LINE. WT = 60 LBS.
CP–2	MECH. ROOM	INDUSTRIAL HOT WATER	BELL & GOSSETT	PL–45	8.5	25 FT	–	1/6	1725	120	1	60	BRONZE, 1" IN–LINE. WT = 80 LBS.
CP–3	MECH. ROOM	TEMPERED WATER	BELL & GOSSETT	PL–45	6	25 FT	–	1/6	1725	120	1	60	BRONZE, 1" IN–LINE. WT = 60 LBS.

VACUUM UNIT SCHEDULE

SYMBOL (LV / –)	LOCATION	PUMP (EACH) MANUFACTURER & MODEL NO.	PUMP (EACH) CAPACITY (SCFM)	PUMP (EACH) MAX (H.G.)	PUMP (EACH) MIN (H.G.)	MOTOR (EACH) HP	MOTOR (EACH) RPM	MOTOR (EACH) VOLTS	MOTOR (EACH) PH	MOTOR (EACH) HZ	RECEIVER DIA (IN)	RECEIVER CAP (GAL)	ANCHORAGE/ DETAIL	REMARKS
LV–1	MECH. ROOM	BEACON #LVV–5D–L80–DC	37	19"	15"	5	1750	480	3	60	24	120	7/S–5.08	LUBRICATED, DUPLEX, ROTARY VANE UNIT. THE SYSTEM CONTROLS PROVIDES AUTOMATIC LEAD/LAG SEQUENCES WITH PROVISIONS FOR SIMULTANEOUS OPERATION DRY CONTACT FOR ON/OFF STATUS. LEAD PUMP SHALL CUT IN AT 21" Hg AND LAG PUMP SHALL CUT IN AT 19" Hg. WT = 1288 LBS.

AIR COMPRESSOR SCHEDULE

SYMBOL (A/C / –)	LOCATION	PUMP (EACH) MANUFACTURER & MODEL NO.	PUMP (EACH) DELIVERY (SCFM)	PUMP (EACH) MAX (PSI)	PUMP (EACH) MIN (PSI)	MOTOR (EACH) HP	MOTOR (EACH) RPM	MOTOR (EACH) VOLTS	MOTOR (EACH) PH	MOTOR (EACH) HZ	RECEIVER DIA (IN)	RECEIVER CAP (GAL)	ANCHORAGE/ DETAIL	REMARKS
LA–1	MECHANICAL/PLUMBING ROOM HS143	BEACON MEDAES #BPS–7D–S80	24	120	50	7–1/2	1750	480	3	60	24	80	1/S–5.08	OIL–LESS, DUPLEX, SCROLL UNIT LESS CO2 & DEWPOINT MONITOR. THE SYSTEM CONTROL PROVIDES AUTOMATIC LEAD/LAG SEQUENCING & SIMULTANEOUS OPERATION. STANDBY PUMP ALARM TO BE DISCONNECTED. PROVIDE HEAVY–DUTY 4–POINT SEISMIC ISOLATION DRY CONTACT FOR ON/OFF STATUS & AUTO DRAINS. WT = 1453 LBS.
CA–1	COMPRESSOR ROOM HS111D	BEACON MEDAES #LPS–5D–S80	17.2	120	50	5	1750	480	3	60	24	80	1/S–5.08	OIL–LESS, DUPLEX, SCROLL UNIT, LESS CO2 MONITOR W/SKID MOUNTED DESICCANT DRYERS, LINE FILTERS, & REGULATORS. THE SYSTEM CONTROL PROVIDES AUTOMATIC LEAD/LAG SEQUENCING & SIMULTANEOUS OPERATION. STANDBY PUMP ALARM TO BE DISCONNECTED. PROVIDE HEAVY–DUTY 4–POINT SEISMIC ISOLATION DRY CONTACT FOR ON/OFF STATUS & AUTO DRAINS. WT = 1453 LBS.

FOODSERVICE EQUIPMENT SCHEDULE (ROUGH–IN & CONNECT)

SYMBOL	EQUIPMENT	BRANCH CONNECTION IND. W	WASTE	TRAP	VENT	COLD	HOT	G	REMARKS
1.4	RANGE	–	–	–	–	–	–	1–1/4"	135 CFH. PROVIDE LINE SIZE SOLENOID VALVE TO INTERFACE W/FIRE SUPPRESSION SYSTEM. MAKE FINAL CONN. W/VALVE & FLEX HOSE. SEE P2.1 & K–1.03 △1
1.6 / 1.7	SINK W/DISPOSER	–	2"	1–1/2"	1–1/2"	3/4"	3/4"	–	PROVIDE TRAPS & SUPPLIES. MAKE FINAL CONN. SEE P2.1 & K–1.03 △1
2.1	DISHWASHER	5/8"	–	–	–	–	1/2"	–	PROVIDE SEPARATE HW ANGLE STOP, AIR GAP FITTING & HOSE CONNECTIONS TO ITEM 1.7. MAKE FINAL CONN. SEE P2.1 & K–1.03 △1
3.5	KETTLE	1/2"	–	–	–	3/4"	3/4"	–	SPILL 1/2" IND. W OVER FLOOR TROUGH. PROVIDE ANGLE STOPS & FINAL CONN. SEE P2.1 & K–1.03 △1
3.6	FLOOR TROUGH	–	3"	3"	2"	–	–	–	SEE P2.1 & K–1.03 △1
3.7	FRYER	–	–	–	–	–	–	1–1/2" △1	240 CFH. MAKE FINAL CONN. W/VALVE & FLEX HOSE. SEE P2.1 & K–1.03 △1
3.8	STEAMER	1"	–	–	–	(2) 3/4"	–	–	SPILL 1" IND. W OVER FLOOR SINK. PROVIDE ANGLE STOPS & FINAL CONN. SEE P2.1 & K–1.03 △1
5.1	SINK ASSEMBLY	–	2"	1–1/4" x 1–1/2"	1–1/2"	1/2"	1/2"	–	PROVIDE SUPPLIES. MAKE FINAL CONN. SEE P2.1 & K–1.03 △1

FOODSERVICE EQUIPMENT SCHEDULE (FUTURE) NOT PART OF THIS APPLICATION

SYMBOL	EQUIPMENT	BRANCH CONNECTION IND. W	WASTE	TRAP	VENT	COLD	HOT	G	REMARKS
F1.4	RANGE	–	–	–	–	–	–	1–1/4"	135 CFH. PROVIDE LINE SIZE CAP CONN. ABV. CLG. SEE P2.1 & K–1.03 △1
F1.6 / F1.7	SINK W/DISPOSER	–	2"	1–1/2"	1–1/2"	3/4"	3/4"	–	PROVIDE WASTE & VENT ROUGH–IN IN WALL. CAP DOMESTIC WATER LINES ABV. CLG. SEE P2.1 & K–1.03 △1
F2.1	DISHWASHER	–	–	–	–	–	–	–	PROVIDE WASTE & VENT ROUGH–IN & CONN. TO ITEM F1.6. DOMESTIC WATER SHALL BE PROVIDED FROM ITEM F1.6 IN FUTURE. SEE P2.1 & K–1.03 △1

tBP
architecture
planning
interiors
management

tBP/Architecture
5455 Wilshire Boulevard, Suite 1200
Los Angeles, CA 90036-4242
ph: 323. 556. 3788 fx: 323. 556. 3799

LICENSED ARCHITECT
STATE OF CALIFORNIA

architect

S&K ENGINEERS
421 EAST HUNTINGTON DRIVE
MONROVIA, CALIFORNIA 91016
626-930-1383 Fax: 626-930-1385
Job No: 07034

REGISTERED PROFESSIONAL ENGINEER
STATE OF CALIFORNIA

consultant

IDENTIFICATION STAMP
DIV. OF THE STATE ARCHITECT
OFFICE OF REGULATION SERVICES
File No. 19-C11
Appl No. 03-112201
AC. ____ RS ____ SS ____
DATE ____

DSA Los Angeles Basin Regional Office
700 North Alameda Street, Suite 5-500
Los Angeles, California 90012
ph: 213/897-3995 fx: 213/897-3159/0726

agency

ANTELOPE VALLEY COLLEGE HEALTH & SCIENCE BUILDING

ANTELOPE VALLEY COMMUNITY COLLEGE DISTRICT
3041 WEST AVENUE K
LANCASTER, CA 93536-5426

owner

tBP project number : 20641.00
file name: A-0104-2FP.DWG
drawn by: M.G. checked by: R.V.
date: July 30, 2009 - 100% CD

Rev:	date:	description:
1	11/16/09	ADDENDUM #1
2	2/26/10	ADDENDUM #2

THIS DRAWING AND THE DESIGNS, DEPICTIONS, IDEAS AND OTHER INFORMATION CONTAINED HEREIN CONSTITUTE UNPUBLISHED WORK OF tBP/ARCHITECTURE AND SHALL REMAIN THE PROPERTY OF tBP/ARCHITECTURE IN PERPETUITY. NO PART THEREOF SHALL BE REPRODUCED, DISCLOSED, DISTRIBUTED, SOLD, PUBLISHED OR OTHERWISE USED IN ANY WAY WITHOUT THE ADVANCED EXPRESS WRITTEN CONSENT OF tBP/ARCHITECTURE.

drawing title:
PLUMBING SCHEDULES

drawing no:
P0.2

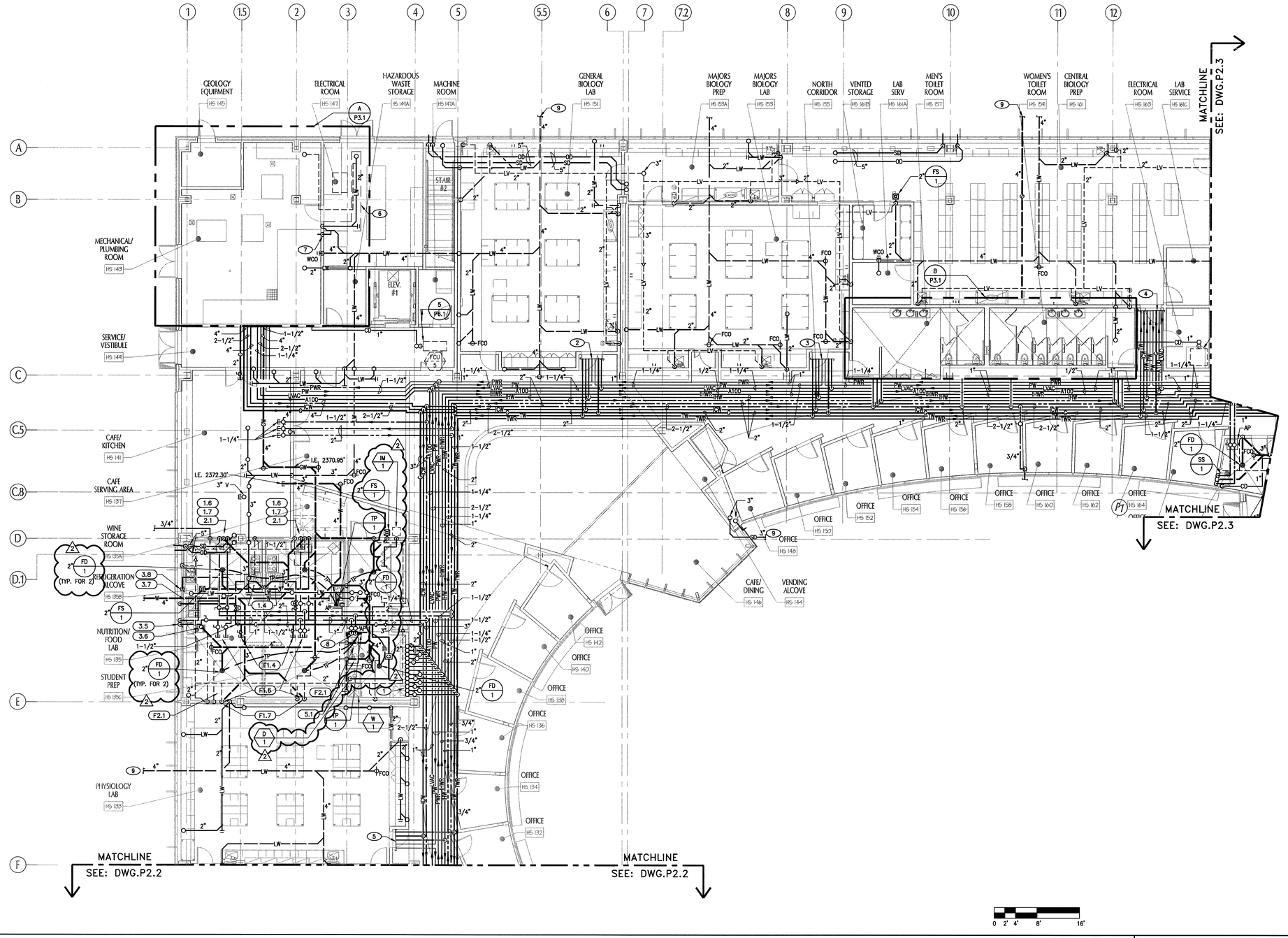

KEYNOTES

1. 2" G, 2" ICW, 2-1/2" CW, 1-1/4" A100, 2-1/2" LVAC, 1-1/4" PW, 1" PWR, 1" IHWR, 1-1/2" IHW, 1" HWR, 1-1/2" HW, 1-1/2" TW & 3/4" TWR UP.
2. 1-1/4" TW, 3/4" ICW, 3/4" IHW, (2) 1-1/4" PW, 1/2" G, 1" LVAC. PROVIDE STAGGERED LINE SIZE SHUT OFF VALVES AT THIS POINT ON ALL UTILITIES W/LINE SIZE BYPASS VALVE BETWEEN PW LINES. FOR CONT. OF SERVICES, REFER TO LABORATORY (LP) DWGS.
3. 1-1/4" TW, 1" ICW, 1" IHW, (2) 1-1/4" PW, 1/2" G, 1" LVAC. PROVIDE STAGGERED LINE SIZE SHUT OFF VALVES AT THIS POINT ON ALL UTILITIES W/LINE SIZE BYPASS VALVE BETWEEN PW LINES. ALL VALVES SHALL BE READILY ACCESSIBLE. FOR CONT. OF SERVICES, REFER TO LABORATORY (LP) DWGS.
4. 1-1/4" TW, 1" ICW, 1" IHW, (2) 1-1/4" PW, 1/2" G, 1/2" A100, 3/4" LVAC. PROVIDE STAGGERED LINE SIZE SHUT OFF VALVES AT THIS POINT ON ALL UTILITIES W/LINE SIZE BYPASS VALVE BETWEEN PW LINES. ALL VALVES SHALL BE READILY ACCESSIBLE. FOR CONT. OF SERVICES, REFER TO LABORATORY (LP) DWGS.
5. 1/2" TW, 3/4" ICW, 3/4" IHW, (2) 1" PW. PROVIDE STAGGERED LINE SIZE SHUT OFF VALVES AT THIS POINT ON ALL UTILITIES W/LINE SIZE BYPASS VALVE BETWEEN PW LINES. ALL VALVES SHALL BE READILY ACCESSIBLE. FOR CONT. OF SERVICES, REFER TO LABORATORY (LP) DWGS.
6. PROVIDE SHEET METAL DRIP PAN. 6" ON ALL SIDES OF PIPE & MIN. 4" HIGH. RUN TRAP PRIMER IN PAN
7. 1" DRAIN DROP IN WALL & SPILL 3" ABV. FLR.
8. 3/4" CW & HW DROPS TO SOV & TP BEH. AP. RUN 3/4" CW & HW HEADER IN WALL & CONN. TO TP-1
9. FOR CONT. SEE P1.1 (TYP)

KEY PLAN

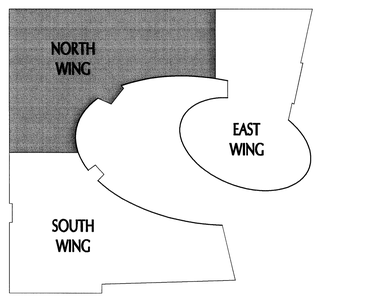

tBP
architecture
planning
interiors
management

tBP/Architecture
5455 Wilshire Boulevard, Suite 1200
Los Angeles, CA 90036-4242
ph: 323. 556. 3788 fx: 323. 556. 3799

architect

S&K ENGINEERS
421 EAST HUNTINGTON DRIVE
MONROVIA, CALIFORNIA 91016
626-930-1385 Fax 626-930-1383
Job No: 07034

consultant

IDENTIFICATION STAMP
DIV. OF THE STATE ARCHITECT
OFFICE OF REGULATION SERVICES
File No. 19-C11
Appl No. 03-112201
AC ____ RS ____ SS ____
DATE ____

DSA Los Angeles Basin Regional Office
700 North Alameda Street, Suite 5-500
Los Angeles, California 90012
ph: 213/897-3995 fx: 213/897-3159/0726

agency

ANTELOPE VALLEY COLLEGE HEALTH & SCIENCE BUILDING

ANTELOPE VALLEY COMMUNITY COLLEGE DISTRICT
3041 WEST AVENUE K
LANCASTER, CA 93536-5426

owner

tBP project number : 20641.00
file name: A0-0101-FFP.dwg
drawn by: M.G. checked by: R.V.
date: July 30, 2009 - 100% CD

Rev:	date:	description:
2	2/26/10	ADDENDUM #2

THIS DRAWING AND THE DESIGNS, DEPICTIONS, IDEAS AND OTHER INFORMATION CONTAINED HEREIN CONSTITUTE UNPUBLISHED WORK OF tBP/ARCHITECTURE AND SHALL REMAIN THE PROPERTY OF tBP/ARCHITECTURE IN PERPETUITY. NO PART THEREOF SHALL BE REPRODUCED, DISCLOSED, DISTRIBUTED, SOLD, PUBLISHED OR OTHERWISE USED IN ANY WAY WITHOUT THE ADVANCED EXPRESS WRITTEN CONSENT OF tBP/ARCHITECTURE.

drawing title:
PLUMBING PARTIAL 1ST FLR. PLAN NORTH WING

drawing no:
P2.1

drawing 4 of 16

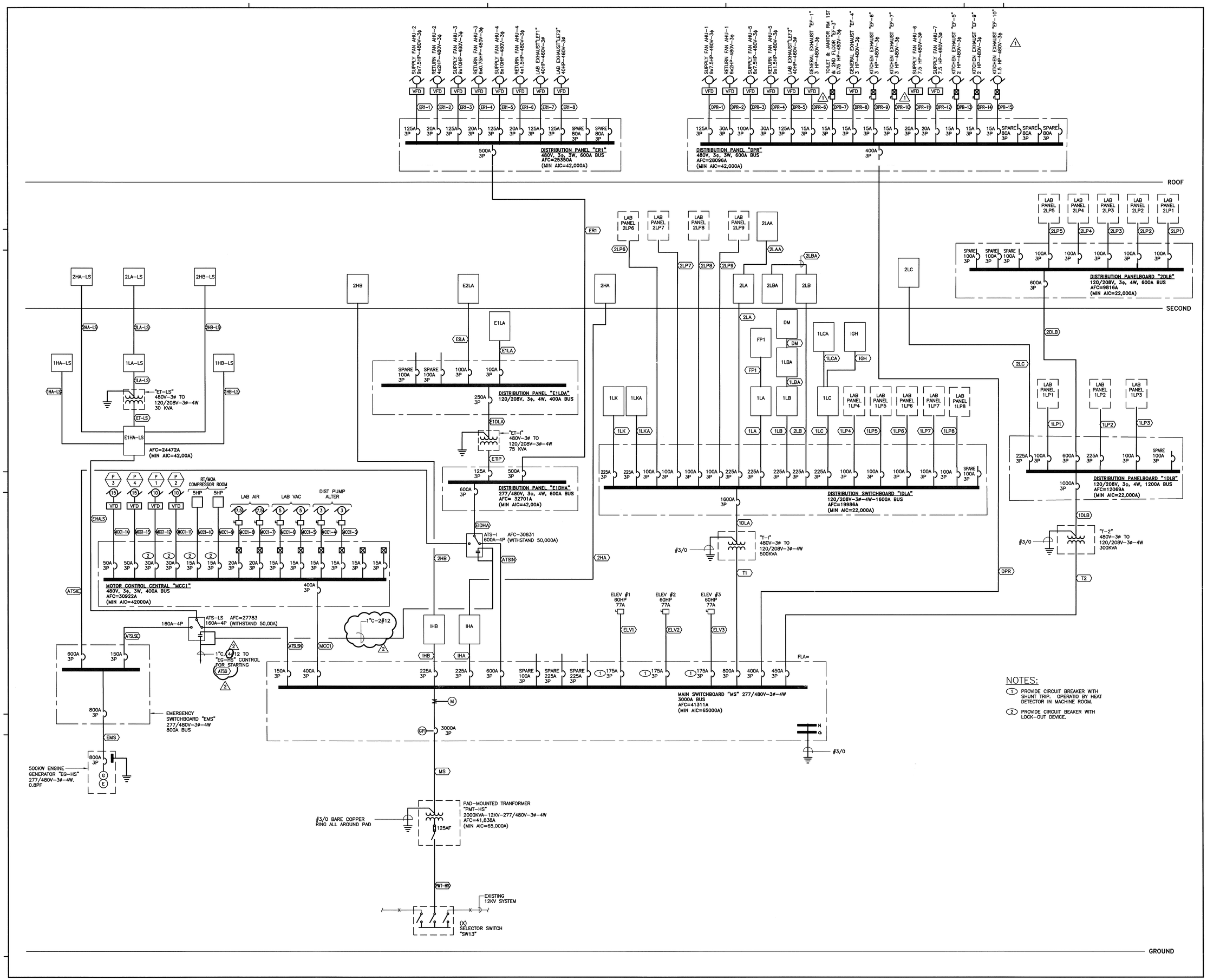

NOTES:

1. PROVIDE CIRCUIT BREAKER WITH SHUNT TRIP. OPERATIO BY HEAT DETECTOR IN MACHINE ROOM.
2. PROVIDE CIRCUIT BEAKER WITH LOCK-OUT DEVICE.

tBP/architecture
5455 Wilshire Boulevard, Suite 1200
Los Angeles, CA 90036-4242
ph: 323. 556. 3788 fx: 323. 556. 3799
architect

S&K ENGINEERS
421 EAST HUNTINGTON DRIVE
MONROVIA, CALIFORNIA 91016
626-930-1338 FAX 626-930-1365
Job No: 07034
consultant

IDENTIFICATION STAMP
DIV. OF THE STATE ARCHITECT
OFFICE OF REGULATION SERVICES
File No. 19-C11
Appl No. 03-112201
AC ____ RS ____ SS ____
DATE ____

DSA Los Angeles Basin Regional Office
700 North Alameda Street, Suite 5-500
Los Angeles, California 90012
ph: 213/897-3995 fx: 213/897-3159/0726
agency

ANTELOPE VALLEY COLLEGE HEALTH & SCIENCE BUILDING

ANTELOPE VALLEY COMMUNITY COLLEGE DISTRICT
3041 WEST AVENUE K
LANCASTER, CA 93536-5426

owner

tBP project number : 2064L00
file name: A0-0101-1FP.dwg
drawn by: K.U. checked by: L.J.
date: July 30, 2009 - 100% CD

Rev:	date:	description:
1	11/16/09	ADDENDUM #1
2	02/26/10	ADDENDUM #2

THIS DRAWING AND THE DESIGNS, DEPICTIONS, IDEAS AND OTHER INFORMATION CONTAINED HEREIN CONSTITUTE UNPUBLISHED WORK OF tBP/ARCHITECTURE AND SHALL REMAIN THE PROPERTY OF tBP/ARCHITECTURE IN PERPETUITY. NO PART THEREOF SHALL BE REPRODUCED, DISCLOSED, DISTRIBUTED, SOLD, PUBLISHED OR OTHERWISE USED IN ANY WAY WITHOUT THE ADVANCED EXPRESS WRITTEN CONSENT OF tBP/ARCHITECTURE.

drawing title:
SINGLE LINE DIAGRAM & LOAD SCHEDULE

drawing no:
E0.2
drawing x of x

"ER1" FEEDER SCHEDULE

FEEDER DESIGNATION	FEEDER SIZE	LENGTH (FEET)	TOTAL CONNECTED LOAD KVA	TOTAL CONNECTED LOAD AMPS	VOLTAGE DROP (%)
ER1-1	1-1/2"C-3#1/0 & 1#6 GND.	120	82	99	0.7
ER1-2	3/4"C-3#8 & 1#10 GND.	170	12	14	0.9
ER1-3	2"C-3#3/0 & 1#6 GND.	120	105	126	0.2
ER1-4	3/4"C-3#10 & 1#10 GND.	90	8	9.6	0.4
ER1-5	2"C-3#2/0 & 1#6 GND.	160	93	112	0.5
ER1-6	3/4"C-3#10 & 1#12 GND.	140	10	12	0.9
ER1-7	1"C-3#1 & 1#6 GND.	55	43.2	52	0.13
ER1-8	1"C-3#1 & 1#6 GND. △1	60	43.2	52	0.14
					△1
TOTAL			396.4	477	

"ET-LS" FEEDER SCHEDULE

FEEDER DESIGNATION	FEEDER SIZE	LENGTH (FEET)	TOTAL CONNECTED LOAD KVA	TOTAL CONNECTED LOAD AMPS	VOLTAGE DROP (%)
1LA-LS	1-1/2"C-4#2 & 1#8 GND.	20	4.1	11.3	0.03
2LA-LS	1-1/2"C-4#2 & 1#8 GND.	180	0.5	1	0.02
TOTAL			4.6	12.3	
ETLS					

"E1DHA" FEEDER SCHEDULE

FEEDER DESIGNATION	FEEDER SIZE	LENGTH (FEET)	TOTAL CONNECTED LOAD KVA	TOTAL CONNECTED LOAD AMPS	VOLTAGE DROP (%)
ER1	(2)2-1/2"C-4#250KCM & 1#2 GND EACH	90	396.4	477	0.3
ET1P	1-1/2"C-3#1 & 1#6 GND	30	4.1	5	0.01
TOTAL			400.5	482	
E1DHA	(2)3"C-4#350KCM & 1#1 GND EACH	40	400.5	482	0.11

"E1HA-LS" FEEDER SCHEDULE

FEEDER DESIGNATION	FEEDER SIZE	LENGTH (FEET)	TOTAL CONNECTED LOAD KVA	TOTAL CONNECTED LOAD AMPS	VOLTAGE DROP (%)
1HA-LS	1-1/2"C-4#2 & 1#8 GND.	20	5.0	6	0.01
1HB-LS	1-1/2"C-4#2 & 1#8 GND.	180	4.3	5	0.01
2HA-LS	1-1/2"C-4#2 & 1#8 GND.	180	4.5	5	0.01
2HB-LS	1-1/2"C-4#2 & 1#8 GND.	150	5.0	6	0.01
ET-LS	1"C-3#6 & 1#10 GND.	30	4.6	6	0.01
TOTAL			23.4	28	
E1HALS	2-1/2"C-4#3/0 & 1#6 GND	30	23.4	28	0.01

"E1LDA" FEEDER SCHEDULE

FEEDER DESIGNATION	FEEDER SIZE	LENGTH (FEET)	TOTAL CONNECTED LOAD KVA	TOTAL CONNECTED LOAD AMPS	VOLTAGE DROP (%)
E1LA	1-1/2"C-4#2 & 1#8 GND.	40	4.1	11	0.01
E2LA	1-1/2"C-4#2 & 1#8 GND.	180	0	0	0
TOTAL			4.1	11	
E1DLA	2-1/2"C-4#250KCM & 1#3 GND.	30	4.1	11	0.01

"PMT-HS" FEEDER SCHEDULE

FEEDER DESIGNATION	FEEDER SIZE	LENGTH (FEET)	TOTAL CONNECTED LOAD KVA	TOTAL CONNECTED LOAD AMPS	VOLTAGE DROP (%)
PMT-HS	4"C-3#2(15KV) & 1#2 BARE COPPER GND.	15	1826.7	88	0.002
MS	(8)4"C-4#500KCM & 1#400KCM GND. EACH	15	1826.7	2206.6	0.0014

"EMS" FEEDER SCHEDULE

FEEDER DESIGNATION	FEEDER SIZE	LENGTH (FEET)	TOTAL CONNECTED LOAD KVA	TOTAL CONNECTED LOAD AMPS	VOLTAGE DROP (%)
ATSLSE	2-1/2"C-4#3/0 & 1#6 GND	20	23.4	27.5	0.01
ATSIE	(2)3-1/2"C-4#350KCM & 1#1 GND EACH	30	400.5	482	0.01
TOTAL			423.9	509.5	
EMS	(2)3-1/2"C-4#500KCM & 1#1/0 GND EACH	100	423.9	509.5	

"DPR" FEEDER SCHEDULE

FEEDER DESIGNATION	FEEDER SIZE	LENGTH (FEET)	TOTAL CONNECTED LOAD KVA	TOTAL CONNECTED LOAD AMPS	VOLTAGE DROP (%)
DPR1	1-1/2"C-3#1/0 & 1#6 GND.	236	82	99	0.9
DPR2	3/4"C-3#6 & 1#8 GND.	220	17	20.4	0.7
DPR3	1-1/4"C-3#3 & 1#8 GND.	212	55	66	0.8
DPR4	3/4"C-3#6 & 1#8 GND.	252	22.4	27	1.1
DPR5	1"C-3#1 & 1#6 GND △1	45	43.2	52	0.6
DPR6	3/4"C-3#10 & 1#12 GND.	276	4.2	5	0.8
DPR7	3/4"C-3#10 & 1#12 GND.	196	1.2	1.4	0.2
DPR8	3/4"C-3#10 & 1#12 GND.	205	4	4.8	0.6
DPR9	3/4"C-3#10 & 1#12 GND.	71 △1	4	4.8	0.1
DPR10	3/4"C-3#10 & 1#12 GND.	96	4	4.8	0.1
DPR11	3/4"C-3#10 & 1#12 GND.	55	9.2	11	0.4
DPR12	3/4"C-3#10 & 1#12 GND.	50	9.2	11	0.4
DPR13	3/4"C-3#10 & 1#12 GND.	40	2.8	3.4	0.04
DPR14	3/4"C-3#10 & 1#12 GND.	50	2.8	3.4	0.05
DPR15	3/4"C-3#10 & 1#12 GND.	50	2.2	2.6	0.04
TOTAL			263	317.4	

△1

"MCC1" FEEDER SCHEDULE

FEEDER DESIGNATION	FEEDER SIZE	LENGTH (FEET)	TOTAL CONNECTED LOAD KVA	TOTAL CONNECTED LOAD AMPS	VOLTAGE DROP (%)
MCC1-3	3/4"C-3#12 & 1#12 GND.	30	3.98	4.8	0.1
MCC1-4	3/4"C-3#12 & 1#12 GND.	30	3.98	4.8	0.1
MCC1-5	3/4"C-3#12 & 1#12 GND.	20	6.30	7.6	0.1
MCC1-6	3/4"C-3#12 & 1#12 GND.	20	6.30	7.6	0.1
MCC1-7	3/4"C-3#12 & 1#12 GND.	20	9.15	11	0.13
MCC1-8	3/4"C-3#12 & 1#12 GND.	20	9.15	11	0.13
MCC1-9	3/4"C-3#12 & 1#12 GND.	240	6.30	7.6	1.1
MCC1-10	3/4"C-3#12 & 1#12 GND.	240	6.30	7.6	1.1
MCC1-11	3/4"C-3#10 & 1#10 GND.	270	11.6	14	1.4
MCC1-12	3/4"C-3#10 & 1#10 GND.	270	11.6	14	1.4
MCC1-13	3/4"C-3#8 & 1#10 GND.	25	17.5	21	0.14
MCC1-14	3/4"C-3#8 & 1#10 GND.	25	17.5	21	0.14
TOTAL			110	132	

"1DLA" FEEDER SCHEDULE

	FEEDER DESIGNATION	FEEDER SIZE	LENGTH (FEET)	TOTAL CONNECTED LOAD KVA	TOTAL CONNECTED LOAD AMPS	VOLTAGE DROP (%)
	1LP8	1-1/2"C-4#2 & 1#8 GND.	160	32.8	91	1.97
	1LP7	1-1/2"C-4#2 & 1#8 GND.	150	18.8	52	1.06
	1LP6	1-1/2"C-4#2 & 1#8 GND.	130	17.2	48	0.85
	1LP5	1-1/2"C-4#2 & 1#8 GND.	50	22.1	61	0.41
	1LP4	1-1/2"C-4#2 & 1#8 GND.	80	29.2	81	0.88
	1LC	2-1/2"C-4#4/0 & 1#4 GND.	170	43	119	1.1
*	IGH	1-1/2"C, 4#2, 1#8	130	–	–	–
*	1LCA	1-1/2"C, 4#2, 1#8	20	18	49	0.7
	1LB	2-1/2"C-4#4/0 & 1#4 GND.	160	55	151	0.55
*	1LBA	1-1/2"C, 4#2, 1#8	20	14	39	0.4
*	DM	1-1/2"C, 4#2, 1#8	110	11	30	0.8
	1LA	2-1/2"C-4#4/0 & 1#4 GND.	30	24	65	0.12
*	FP1	1-1/2"C-4#2 & 1#8 GND.	40	25	69	0.15
	1LK	2-1/2"C-4#4/0 & 1#4 GND.	100	59.2	164	0.46
	1LKA	2-1/2"C-4#4/0 & 1#4 GND.	100	47	131	0.3
	2LA	2-1/2"C-4#4/0 & 1#4 GND.	150	34	95	0.45
*	2LAA	1-1/2"C, 4#2, 1#8	20	6.4	18	0.2
	2LB	2-1/2"C-4#4/0 & 1#4 GND.	120	44	121	0.44
*	2LBA	1-1/2"C-4#2 & 1#8 GND.	20	10.1	28	0.3
	2LP6	1-1/2"C-4#2 & 1#8 GND.	110	23.7	66	0.99
	2LP7	1-1/2"C-4#2 & 1#8 GND.	110	19.5	54.1	0.8
	2LP8	1-1/2"C-4#2 & 1#8 GND.	130	12.6	35.0	0.6
	2LP9	1-1/2"C-4#2 & 1#8 GND.	160	8.1	22.5	0.48
	TOTAL 1DLA	(4)3-1/2"C-4#500KCM & 1#4/0 GND EACH	30	512.2	1426.6	0.23

* TOTAL LOAD IS INCLUDED WITH ITS ADJACENT PANEL

"MS" FEEDER SCHEDULE

	FEEDER DESIGNATION	FEEDER SIZE	LENGTH (FEET)	TOTAL CONNECTED LOAD KVA	TOTAL CONNECTED LOAD AMPS	VOLTAGE DROP (%)
	T2	(2) 2-1/2"C-3#250KCM & 1#2 GND. EACH	180	293.1	352.6	0.47
	DPR	3-1/2"C-3#500KCM & 1#3 GND. EACH	70	263	317.4	0.16
	MCC1	3-1/2"C-3#500KCM & 1#3 GND. EACH	50	110	132	0.11
	T1	(2)3"C-3#500KCM & 1#1/0 GND EACH	20	477.2	574	0.07
	ATS1N	(2)3-1/2"C-4#350KCM & 1#1 GND. EACH	40	400.5	482	0.01
	1HA	2-1/2"C-4#4/0 & 1#4 GND.	30	50.6	69	0.04
	1HB	2-1/2"C-4#4/0 & 1#4 GND.	180	38.9	47	0.16
*	2HA	1-1/2"C-4#2 & 1#8 GND.	220	29.6	36	0.5
*	2HB	1-1/2"C-4#2 & 1#8 GND.	120	22.6	27	0.3
	ATSLSN	2-1/2"C-4#3/0 & 1#6 GND.	30	23.4	28	0.02
	ELV1	1-1/4"C-3#2 & 1#8 BARE COPPER GND.	120	64	77	0.54
	ELV2	1-1/4"C-3#2 & 1#8 BARE COPPER GND.	40	64	77	0.18
	ELV3	1-1/4"C-3#2 & 1#8 BARE COPPER GND.	110	64	77	0.50
	TOTAL			1842.7	2233	
					△1	

* TOTAL OF 2HA & 2HB INCLUDED WITH 1HA & 1HB

GENERAL NOTE:

1. FEEDER LENGTHS INDICATED ARE FOR VOLTAGE DROP PURPOSES ONLY.
2. FEEDER CONDUCTORS SHALL BE 60° C. FOR SIZE #1 OR SMALLER.
3. FEEDER SHALL BE SIZED TO MATCH OR EXCEED OVERCURRENT PROTECTION.

"2DLB" FEEDER SCHEDULE

FEEDER DESIGNATION	FEEDER SIZE	LENGTH (FEET)	TOTAL CONNECTED LOAD KVA	TOTAL CONNECTED LOAD AMPS	VOLTAGE DROP (%)
2LP1	1-1/2"C-4#2 & 1#8 GND.	130	28.2	78	1.43
2LP2	1-1/2"C-4#2 & 1#8 GND.	90	18.9	52	0.70
2LP3	1-1/2"C-4#2 & 1#8 GND.	60	33.9	94	0.77
2LP4	1-1/2"C-4#2 & 1#8 GND.	40	16.7	46	0.25
2LP5	1-1/2"C-4#2 & 1#8 GND.	70	33.7	94	0.89
TOTAL			131.4	364	–

"1DLB" FEEDER SCHEDULE

FEEDER DESIGNATION	FEEDER SIZE	LENGTH (FEET)	TOTAL CONNECTED LOAD KVA	TOTAL CONNECTED LOAD AMPS	VOLTAGE DROP (%)
1LP1	1-1/2"C-4#2 & 1#8 GND.	80	27.7	77	0.83
1LP2	2-1/2"C-4#4/0 & 1#4 GND.	60	63.1	175	1.43
1LP3	1-1/2"C-4#2 & 1#8 GND.	40	17.7	49	0.26
2DLB	(2)3"C-4#350 & 1#1 GND	90	131.4	364	0.17
2LC	2-1/2"C-4#4/0 & 1#4 GND.	120	53.2	148	0.75
TOTAL			293.1	813	–
1DLB	(4)2-1/2"C-4#250KCM & 1#2/0 GND EACH	30	293.1	813	0.17

PANEL 'FP1'

VOLTAGE 120/208 3Ø, 4W
BUS AMPS 100A
MAIN BREAKER ☐ ____ A.F. ____ A.T.
LUGS ONLY ☒

LOCATION ELE. ROOM-1ST FLOOR-SOUTH WING
TOP FEED ☒ SURFACE MTG. ☒
BOTTOM FEED ☐ FLUSH MTG. ☐
REMARKS

DESCRIPTION	A	B	C	LCL	L	R	M	CB	CKT	CKT	CB	L	R	M	LCL	A	B	C	DESCRIPTION
(1) HEAT TRACING J1	1500						1	30A-2P	1	2	30A-2P			1		1500			HEAT TRACING J5 (1)
HEAT TRACING J1		1500					-	-	3	4	-			-			1500		HEAT TRACING J5
(1) HEAT TRACING J2			1500				1	30A-2P	5	6	30A-2P			1				1500	HEAT TRACING J6 (1)
HEAT TRACING J2	1500						-	-	7	8	-			-		1500			HEAT TRACING J6
(1) HEAT TRACING J3		1500					1	30A-2P	9	10	30A-2P			1			1500		HEAT TRACING J7 (1)
HEAT TRACING J3			1500				-	-	11	12	-			-				1500	HEAT TRACING J7
(1) HEAT TRACING J4	1500						1	30A-2P	13	14	30A-2P			1		1500			HEAT TRACING J8 (1)
HEAT TRACING J4		1500					-	-	15	16	-			-			1500		HEAT TRACING J8
EC-T8 #1			500				1	20A-1P	17	18	20A-1P			1				500	EC-T8 #2
SPACE									19	20									SPACE
									21	22									
									23	24									
									25	26									
									27	28									
									29	30									
									31	32									
									33	34									
									35	36									
									37	38									
									39	40									
									41	42									
SUB TOTALS	4500	4500	3500													4500	4500	3500	SUB TOTALS

CONN. PHASE TOTAL: A 9000 B 9000 C 7000 CONN. PANEL TOTAL 25000 KVA MAX. CONN. LINE CURRENT 75 AMPS
(KVA) PANEL TOTAL 25.00 + L.C.L. (25) 0.00 = 25.00 KVA BALANCED CURRENT 69 AMPS DESIGN LOAD ____ KVA

(1) PROVIDE 30MILLIAMP GFI CIRCUIT BREAKER.

PANEL 'DM'

VOLTAGE 120/208 3Ø, 4W
BUS AMPS 100A
MAIN BREAKER ☐ ____ A.F. ____ A.T.
LUGS ONLY ☒

LOCATION STORAGE NEXT TO HS181E
TOP FEED ☒ SURFACE MTG. ☒
BOTTOM FEED ☐ FLUSH MTG. ☐
REMARKS

DESCRIPTION	A	B	C	LCL	L	R	M	CB	CKT	CKT	CB	L	R	M	LCL	A	B	C	DESCRIPTION
SOUND-HS181	1500				1			20A-1P	1	2	20A-1P	1			o	1500			LED COVE-HS181
		1500			1				3	4									SPARE
			1500		1				5	6									
	1500				1				7	8									
SCI DOME HS CONSOLE		1500			1				9	10									
SCI DOME HS CONSOLE			1500		1				11	12									
SPARE									13	14									
SPACE									15	16									SPACE
									17	18									
									19	20									
									21	22									
									23	24									
									25	26									
									27	28									
									29	30									
									31	32									
									33	34									
									35	36									
									37	38									
									39	40									
									41	42									
SUB TOTALS	3000	3000	3000													1500	0	0	SUB TOTALS

CONN. PHASE TOTAL: A 4500 B 3000 C 3000 CONN. PANEL TOTAL 10500 KVA MAX. CONN. LINE CURRENT 38 AMPS
(KVA) PANEL TOTAL 1050 + L.C.L. (25) 038 = 1088 KVA BALANCED CURRENT 30 AMPS DESIGN LOAD ____ KVA

PANEL '1LBA'

VOLTAGE 120/208 3Ø, 4W
BUS AMPS 100A
MAIN BREAKER ☐ ____ A.F. ____ A.T.
LUGS ONLY ☒

LOCATION ELE. ROOM-1ST FLOOR NORTH WING
TOP FEED ☒ SURFACE MTG. ☒
BOTTOM FEED ☐ FLUSH MTG. ☐
REMARKS

DESCRIPTION	A	B	C	LCL	L	R	M	CB	CKT	CKT	CB	L	R	M	LCL	A	B	C	DESCRIPTION
ROOM 113	180					1		20A-1P	1	2	20A-1P		2			360			AV SYSTEM IN ROOM 171
AV SYSTEM IN ROOM 113		360				2			3	4			1				180		FLAT MONITOR IN ROOM 171
AV SYSTEM IN ROOM 113			360			2			5	6			2					360	FLOOR POWER IN ROOM 171
HAND DRYER IN REST ROOM	1000						1		7	8			2			360			AV SYSTEM IN ROOM 134
		1000					1		9	10			1				180		FLAT MONITOR IN ROOM 134
			1000				1		11	12			2					360	PROJECTOR & SCREEN IN RM 134
	1000						1		13	14									SPARE
AV INPUT		360				2			15	16									
AV UNIT			1080			6			17	18									
SPARE									19	20									
									21	22									SPACE
									23	24									
									25	26									
IDF ROOM		720				4			27	28									
IDF ROOM			720			4			29	30									
DEDICATED CIRCUIT	1200					1		20A-2P	31	32									
DEDICATED CIRCUIT		1200				-		-	33	34									
DEDICATED CIRCUIT			2000			1		30A-1P	35	36									
SPACE									37	38	100A-3P			1	o	4500			PANEL 'DM'
									39	40	-			-	o		3000		PANEL 'DM'
									41	42	-			-	o			3000	PANEL 'DM'
SUB TOTALS	3380	3640	5160													5220	3360	3720	SUB TOTALS

CONN. PHASE TOTAL: A 8600 B 7000 C 8880 CONN. PANEL TOTAL 24480 KVA MAX. CONN. LINE CURRENT 74 AMPS
(KVA) PANEL TOTAL 24.48 + L.C.L. (25) 2.63 = 27.11 KVA BALANCED CURRENT 75 AMPS DESIGN LOAD ____ KVA

PANEL '2LAA'

VOLTAGE 120/208 3Ø, 4W
BUS AMPS 100A
MAIN BREAKER ☐ ____ A.F. ____ A.T.
LUGS ONLY ☒

LOCATION ELE. ROOM-2ND FLOOR-SOUTH WING
TOP FEED ☒ SURFACE MTG. ☒
BOTTOM FEED ☐ FLUSH MTG. ☐
REMARKS

DESCRIPTION	A	B	C	LCL	L	R	M	CB	CKT	CKT	CB	L	R	M	LCL	A	B	C	DESCRIPTION
AV INPUT	360					2		20A-1P	1	2	20A-1P		2			360			AV INPUT
AV EQUIPMENT		360				2			3	4			2				360		AV EQUIPMENT
AV INPUT			360			2			5	6			2					360	AV INPUT
AV EQUIPMENT	360					2			7	8			2			360			AV EQUIPMENT
△1 COMPUTER		1080				6			9	10									SPARE
HS205 COMPUTER			1000			2			11	12			6					1080	NURSING SKILL LAB HS 209A
AV INPUT	360					2			13	14			8			1440			NURSING SKILL LAB IN HS209
PROJECTOR & SCREEN		1000				2			15	16			8				1440		NURSING SKILL LAB IN HS209
AV EQUIPMENT			360			2			17	18			8					1440	NURSING SKILL LAB IN HS207
SMARTBOX	360					2			19	20			8			1440			NURSING SKILL LAB IN HS207
HS209		720				4			21	22			8				1440		NURSING SKILL LAB IN HS205
			720			4			23	24			8					1440	NURSING SKILL LAB IN HS205
	720					4			25	26			4			720			HS205
		720				4			27	28			4				720		
HS207			720			4			29	30			4					720	
	720					4			31	32			4			720			
		720				4			33	34									SPARE
			720			4			35	36									
△1 HS205-COMPUTER & PRINTER	1500					2			37	38									
AV EQUIPMENT		300					1		39	40									
SPARE									41	42									
SUB TOTALS	4380	4900	3880													5040	3960	5040	SUB TOTALS

CONN. PHASE TOTAL: A 9420 B 8860 C 8920 CONN. PANEL TOTAL 27200 KVA MAX. CONN. LINE CURRENT 79 AMPS
(KVA) PANEL TOTAL 27.20 + L.C.L. (25) 0.00 = 27.20 KVA BALANCED CURRENT 75 AMPS DESIGN LOAD ____ KVA

PANEL '1LCA'

VOLTAGE 120/208 3Ø, 4W
BUS AMPS 225A
MAIN BREAKER ☐ ____ A.F. ____ A.T.
LUGS ONLY ☒

LOCATION ELE RM IN 1ST FLOOR SOUTH WING
TOP FEED ☒ SURFACE MTG. ☒
BOTTOM FEED ☐ FLUSH MTG. ☐
REMARKS

DESCRIPTION	A	B	C	LCL	L	R	M	CB	CKT	CKT	CB	L	R	M	LCL	A	B	C	DESCRIPTION
FLAT MONITOR	500					2		20A-1P	1	2	20A-1P		2			360			AV INPUT PANEL
PROJECT SCREEN & PROJECTOR		1000				2			3	4			2				360		AV EQUIPMENT RACK
PROJECT SCREEN & PROJECTOR			1000			2			5	6			2					360	SMART BOX
FLAT MONITOR	500					2			7	8			2			360			AV INPUT
SPARE									9	10			2				500		FLAT MONITOR
SPARE									11	12			2					360	SMART BOX
COMPUTER	300					1			13	14			2			360			AV EQUIPMENT RACK
AV EQUIPMENT RACK		360				2			15	16			2				360		SMART BOX
SMART BOX			360			2			17	18			2					360	AV INPUT PANEL
AV INPUT PANEL	360					2			19	20			2			360			AV INPUT
HS111A		720				4			21	22			2				360		SMARTBOX
			720			4			23	24			6					1080	POWR IN HS121
	720					4			25	26			2			1000			PROJECTOR & SCREEN
		720				4			27	28			2				360		AV EQUIPMENT
IDF ROOM HS 126			1080			6			29	30			6					1080	IDF ROOM HS126
HS101	180					1			31	32	20A-2P			1		1200			IDF ROOM HS126
		180				1			33	34	-			-			1200		IDF ROOM HS126
			180			1			35	36	30A-1P			1				2000	IDF ROOM HS126
△2 JUNCTION BOX	720						4		37	38	20A-1P								SPARE
RECEPTACLES		900					5		39	40									
SPARE									41	42									
SUB TOTALS	3280	3880	3340													3640	3140	5240	SUB TOTALS

CONN. PHASE TOTAL: A 6920 B 7020 C 8580 CONN. PANEL TOTAL 22520 KVA MAX. CONN. LINE CURRENT 72 AMPS
(KVA) PANEL TOTAL 22.52 + L.C.L. (25) 0.00 = 22.52 KVA BALANCED CURRENT 63 AMPS DESIGN LOAD ____ KVA

tBP
architecture planning interiors management
tBP/Architecture
5455 Wilshire Boulevard, Suite 1200
Los Angeles, CA 90036-4242
ph: 323. 556. 3788 fx: 323. 556. 3799
LICENSED ARCHITECT · STATE OF CALIFORNIA · NO. C25074 · REN. 4-30-11
architect

S&K ENGINEERS
421 EAST HUNTINGTON DRIVE
MONROVIA, CALIFORNIA 91016
626-930-1383 Fax: 626-930-1385
Job No: 07034
REGISTERED PROFESSIONAL ENGINEER · LESTER S. WONG · No. E10979 · Exp. 6/30/2011 · ELECTRICAL · STATE OF CALIFORNIA
consultant

IDENTIFICATION STAMP
DIV. OF THE STATE ARCHITECT
OFFICE OF REGULATION SERVICES
File No. 19-C11
Appl No. 03-112201
AC ____ FLS ____ SS ____
DATE ____

DSA Los Angeles Basin Regional Office
700 North Alameda Street, Suite 5-500
Los Angeles, California 90012
ph: 213/897-3995 fx: 213/897-3159/0726
agency

ANTELOPE VALLEY COLLEGE
HEALTH & SCIENCE BUILDING
ANTELOPE VALLEY COMMUNITY COLLEGE DISTRICT
3041 WEST AVENUE K
LANCASTER, CA 93536-5426
owner

tBP project number : 20641.00
file name: A0-0101-1FP.dwg
drawn by: K.U. checked by: L.J.
date: July 30, 2009 - 100% CD

Rev:	date:	description:
△1	11/16/09	ADDENDUM #1
△2	02/26/10	ADDENDUM #2

THIS DRAWING AND THE DESIGNS, DEPICTIONS, IDEAS AND OTHER INFORMATION CONTAINED HEREIN CONSTITUTE UNPUBLISHED WORK OF tBP/ARCHITECTURE AND SHALL REMAIN THE PROPERTY OF tBP/ARCHITECTURE IN PERPETUITY. NO PART THEREOF SHALL BE REPRODUCED, DISCLOSED, DISTRIBUTED, SOLD, PUBLISHED OR OTHERWISE USED IN ANY WAY WITHOUT THE ADVANCED EXPRESS WRITTEN CONSENT OF tBP/ARCHITECTURE.

drawing title:
FEEDER & PANEL SCHEDULE

drawing no.:
E0.3
drawing x of x

VOLTAGE 120/208 3Ø, 4W. BUS AMPS 225A MAIN BREAKER ☒ 225A A.F. ______ A.T. LUGS ONLY ☐

PANEL '1LA'

LOCATION ELE. ROOM-1ST FLOOR-NORTH WING TOP FEED ☒ SURFACE MTG. ☒ BOTTOM FEED ☐ FLUSH MTG. ☐ REMARKS ______

DESCRIPTION	A	B	C	LCL	L	R	M	CB	CKT	CKT	CB	L	R	M	LCL	A	B	C	DESCRIPTION
SERVICE VERTBULE	1080					6		20A-1P	1	2	20A-1P		6			1080			OFFICE
		1080				6			3	4			6				1080		
PH MONITOR			500				1		5	6			6					1080	
OFFICE	1080					6			7	8			6			1080			
		1080				5			9	10			6				1080		
			1080			6			11	12			6					1080	
	720					4			13	14			6			1080			
		900				5			15	16			6				1080		
SPARE									17	18			6					1080	
									19	20				1		50			MOTORIZED WINDOW SHADE IN N.W.
VENDING ALCOVE		1800				2			21	22				1			500		LA-1
CP-1			580					15A-1P	23	24	30A-2P			1				750	GENERATOR HEAT JACKET
CP-2	580								25	26	-			-		750			GENERATOR HEAT JACKET
CP-3		580							27	28	20A-1P								SPARE
OUTSIDE LIGHTING			600	o	8			20A-1P	29	30									
SPARE									31	32									
									33	34									
									35	36									
									37	38	100A-3P			1		9000			PANEL 'FPI'
									39	40	-			-			9000		
									41	42	-			-				7000	
SUB TOTALS	3460	5440	2760													13040	12740	10990	SUB TOTALS

CONN. PHASE TOTAL: A 16500 B 18180 C 13750 CONN. PANEL TOTAL 48430 KVA MAX. CONN. LINE CURRENT 152 AMPS

(KVA) PANEL TOTAL 48.43 + L.C.L. (25) 0.15 = 48.58 KVA BALANCED CURRENT 135 AMPS DESIGN LOAD ______ KVA

VOLTAGE 120/208 3Ø, 4W. BUS AMPS 225A MAIN BREAKER ☒ 225 A.F. ______ A.T. LUGS ONLY ☐

PANEL '1LB'

LOCATION ELE. ROOM-FIRST FLOOR-NORTH WING TOP FEED ☒ SURFACE MTG. ☒ BOTTOM FEED ☐ FLUSH MTG. ☐ REMARKS ______

DESCRIPTION	A	B	C	LCL	L	R	M	CB	CKT	CKT	CB	L	R	M	LCL	A	B	C	DESCRIPTION
MEN & WOMEN REST ROOM	360					2		20A-1P	1	2	20A-1P		6			1080			OFFICE
OUTSIDE CORRIDOR		720				4			3	4			6				1080		
HAND DRYER IN MEN'S REST ROOM			1000			1			5	6			7					1260	
HAND DRYER IN WOMEN'S REST ROOM	1000					1			7	8			5			900			
		1080				6			9	10			7				1260		
			1080			6			11	12			5					900	
	1080					6			13	14			5			900			
		900				5			15	16			6				1080		
			1080			6			17	18			5					900	
	1080					6			19	20			5			900			
		1080				6			21	22			5				900		
			1080			6			23	24			5					900	
OUTSIDE PLANETARIUM EAST HALL	900					5			25	26			2			360			AV UNIT
PROJECTOR		180				1			27	28				5			400		MOTORIZED WINDOW SHADE IN E.W.
PROJECTOR & SCREEN			1000			1			29	30			1					1000	PROJECTOR IN CLASSROOM
LIGHTING	300			o		3			31	32			6			1080			OFFICE
RECEPTECLE		750				1			33	34			6				1080		OFFICE
RECEPTECLE			750			1			35	36		5			o			10	LIGHTING
SPARE									37	38	100A-3P			1		8600			PANEL '1LBA'
									39	40	-			-			7000		
									41	42	-			-				8880	
SUB TOTALS	4720	4710	5990													13820	12800	13850	SUB TOTALS

CONN. PHASE TOTAL: A 18540 B 17510 C 19840 CONN. PANEL TOTAL 55890 KVA MAX. CONN. LINE CURRENT 165 AMPS

(KVA) PANEL TOTAL 55.89 + L.C.L. (25) 0.08 = 55.97 KVA BALANCED CURRENT 155 AMPS DESIGN LOAD ______ KVA

VOLTAGE 120/208 3Ø, 4W. BUS AMPS 225A MAIN BREAKER ☒ 225 A.F. ______ A.T. LUGS ONLY ☐

PANEL '1LC'

LOCATION ELE ROOM-FIRST FLOOR SOUTH WING TOP FEED ☒ SURFACE MTG. ☒ BOTTOM FEED ☐ FLUSH MTG. ☐ REMARKS ______

DESCRIPTION	A	B	C	LCL	L	R	M	CB	CKT	CKT	CB	L	R	M	LCL	A	B	C	DESCRIPTION
REST ROOM & VESTBULE	1080					6		20A-1P	1	2	20A-1P		5			900			OFFICE
REST ROOM & VESTBULE		1080				6			3	4			5				900		
DRINKING WATER			390			1			5	6			5					900	
	900					5			7	8			6			1080			
		540				3			9	10			6				1080		
			1080			6			11	12			6					1080	
	900					5			13	14			5			900			
MOTORIZED WINDOW SHADE IN S.W.		450					9		15	16			5				900		
STEAM STERILIZER SYSTEM			1150			1			17	18			2					360	CLASS ROOM HS121
CLASSROOM/DISTRACT STUDIES	900					5			19	20			2			1000			PROJECTOR
PROJECTOR AT CALLSROOM		200				2			21	22			2				1000		PROJECTOR
CLASSROOM/DISTRACT STUDIES						5			23	24			4					720	CLASS ROOM
CLASS ROOM	1260					7			25	26			4			720			POWER IN HS121
CLASS ROOM		720				4			27	28			4				720		CLASS ROOM
AV INPUT PANEL			360			2			29	30			2					1000	PROJECTOR
AV EQUIPMENT RACK	360					2			31	32			2			360			FOR ELEVATOR
SPARE									33	34		7			o		448		GREENHOUSE LIGHTING
SPARE									35	36									SPARE
PANEL IGH IN GREENHOUSE	3000						1	100A-3P	37	38	100A-3P			1		5300			PANEL '1LCA'
PANEL IGH IN GREENHOUSE		3000					-	-	39	40	-			-			4500		
PANEL IGH IN GREENHOUSE			3000				-		41	42	-			-				7680	
SUB TOTALS	8400	5990	5980													10260	9548	11740	SUB TOTALS

CONN. PHASE TOTAL: A 18660 B 15538 C 17720 CONN. PANEL TOTAL 51918 KVA MAX. CONN. LINE CURRENT 156 AMPS

(KVA) PANEL TOTAL 51.92 + L.C.L. (25) 0.11 = 52.03 KVA BALANCED CURRENT 144 AMPS DESIGN LOAD ______ KVA

VOLTAGE 120/208 3Ø, 4W. BUS AMPS 225 MAIN BREAKER ☒ 225 A.F. ______ A.T. LUGS ONLY ☐

PANEL '1LK'

LOCATION FIRST FLOOR - NORTH WIND TOP FEED ☐ SURFACE MTG. ☒ BOTTOM FEED ☐ FLUSH MTG. ☐ REMARKS STUDETN PREFERATION

DESCRIPTION	A	B	C	LCL	L	R	M	CB	CKT	CKT	CB	L	R	M	LCL	A	B	C	DESCRIPTION
DISPOSER	696						1	15A-1P	1	2	20A-1P			1		1584			OVEN, MICROWAVE
DISHWASHER, U.C.		1092					1	20A-1P	3	4	20A-2P			1			2415		COOKTOP
COUNTER W/SINK /FAUCET			2400				1	30A-1P	5	6	-			-				2415	COOKTOP
FRY ASSEMBLY	360						3	15A-1P	7	8	20A-1P			1		1584			OVEN, MICROWAVE
OVEN, CONVECTION ELETRIC		3401					1	40A-2P	9	10	30A-2P			1			2415		COOKTOP
			3401				-	-	11	12	-			-				2415	COOKTOP
COUNTER W/SINK /FAUCET	2400						1	30A-1P	13	14	20A-1P			1		180			FIRE SUPPRESSION
DISPOSER		696					1	15A-1P	15	16	20A-1P			1			180		FIRE SUPPRESSION
DISHWASHER U.C.			1092				1	20A-1P	17	18				2				1000	PROJECTOR
F3.1-OVEN MICROWAVE	1584						1		19	20	20A-1P			1		180			FIRE SUPPRESSION
F1.5-COOKTOP, DROP IN ELECTRIC		2415					1	30A-2P	21	22				1			180		FIRE SUPPRESSION
F1.5-COOKTOP, DROP IN ELECTRIC			2415				-	-	23	24				1				180	FIRE SUPPRESSION
SPARE								20A-1P	25	26				1		180			FIRE SUPPRESSION
									27	28			2				360		POWER
									29	30									SPARE
KETTLE, 20 GAL TITL FLOOR	4108						1	50A-3P	31	32									
		4108					-	-	33	34									
			4108				-	-	35	36									
STEAMER, ELECTRIC	3135						1	40A-3P	37	38									
		3135					-	-	39	40									
			3135				-	-	41	42									
SUB TOTALS	12283	14847	16551													3708	5550	6010	SUB TOTALS

CONN. PHASE TOTAL: A 15991 B 20397 C 22561 CONN. PANEL TOTAL 58949 KVA MAX. CONN. LINE CURRENT 188 AMPS

(KVA) PANEL TOTAL 58.95 + L.C.L. (25) 0.00 = 58.95 KVA BALANCED CURRENT 164 AMPS DESIGN LOAD ______ KVA

VOLTAGE 120/208 3Ø, 4W. BUS AMPS 225A MAIN BREAKER ☒ 225 A.F. ______ A.T. LUGS ONLY ☐

PANEL '2LA'

LOCATION ELE. ROOM-2ND FLOOR-SOUTH WING TOP FEED ☒ SURFACE MTG. ☒ BOTTOM FEED ☐ FLUSH MTG. ☐ REMARKS ______

1 (revision delta)

DESCRIPTION	A	B	C	LCL	L	R	M	CB	CKT	CKT	CB	L	R	M	LCL	A	B	C	DESCRIPTION
ROOM HS213	360					2		20A-1P	1	2	20A-1P		7			1260			OFFICE
		360				2			3	4			7				1260		
			540			3			5	6			7					1260	
OFFICE	900					6			7	8			6			1080			POWER
		1080				6			9	10			6				1080		POWER
			1080			6			11	12			2					1000	PROJECTOR & SCREEN
	720					4			13	14			2			1000			
		720				4			15	16			2				1000		
IDF HS224			1080			6			17	18			2					1000	
	2000					1		30A-1P	19	20			5			900			NURSE STATION/SIMULATION SUIT
		1200					1	20A-2P	21	22			5				900		NURSE STATION/SIMULATION SUIT
			1200				-	-	23	24				10				500	MOTORIZED WINDOW SHADES
NURSE STATION	1500					2		20A-1P	25	26	15A-2P			1		560			FCU-4
FCU-7		200					1	15A-2P	27	28	-			-			560		-
-			200				-	-	29	30	15A-1P			1				200	CONDENSATE PUMP, FCU 4
HAND DRYER IN MEN'S REST RM	1000					1		20A-1P	31	32	20A-1P								SPARE
HAND DRYER IN WOMEN'S REST RM		1000				1			33	34									
IDF HS224			1080			6			35	36									
PANEL '2LAA'	2160						1	100A-3P	37	38									
		2800					-	-	39	40									
			1440				-	-	41	42									
SUB TOTALS	8640	7360	6620													4800	4800	3960	SUB TOTALS

CONN. PHASE TOTAL: A 13440 B 12160 C 10580 CONN. PANEL TOTAL 36180 KVA MAX. CONN. LINE CURRENT 112 AMPS

(KVA) PANEL TOTAL 36.18 + L.C.L. (25) 0.00 = 36.18 KVA BALANCED CURRENT 100 AMPS DESIGN LOAD ______ KVA

VOLTAGE 120/208 3Ø, 4W. BUS AMPS 225A MAIN BREAKER ☒ 225A A.F. ______ A.T. LUGS ONLY ☐

PANEL '2LB'

LOCATION ELE. ROOM-2ND FLOOR-NORTH WING TOP FEED ☐ SURFACE MTG. ☐ BOTTOM FEED ☒ FLUSH MTG. ☒ REMARKS ______

1 (revision delta)

DESCRIPTION	A	B	C	LCL	L	R	M	CB	CKT	CKT	CB	L	R	M	LCL	A	B	C	DESCRIPTION
OFFICE	1260					7		20A-1P	1	2	20A-1P		7			1260			OFFICE
		1260				7			3	4			7				1260		
			1260			7			5	6			7					1260	
2ND FLOOR-EAST WING	1080					6			7	8			6			1080			
		1080				6			9	10			6				1080		
			1080			6			11	12			6					1080	
	1080					6			13	14			6			1080			
		1080				6			15	16			6				1080		
			1080			6			17	18			6					1080	
SPARE									19	20			6			1080			
SPARE									21	22			6				1080		2ND FLOOR-EAST WING
HAND DRYER IN MENS' RM			1000				1		23	24		1						1400	LIGHTING POWER ENGINE
HAND DRYER IN WOMEN'S RM	1000						1		25	26		1				1400			
PROJECTOR & SCREEN IN RM 261		360					2		27	28		1					1400		
2ND FLOOR-EAST WING			1080			6			29	30			6					720	HS272
SPARE									31	32			6			720			HS274
									33	34			6				720		HS276
									35	36			3					1080	TV MONITOR OUTLETS
PANEL 2LBA	3280						1	100A-3P	37	38			3			1080			TV MONITOR OUTLETS
-		3040					-	-	39	40			4				720		RECEPTACLES
-			3760				-	-	41	42									SPARE
SUB TOTALS	7100	6820	9260													7100	7340	6620	SUB TOTALS

CONN. PHASE TOTAL: A 15400 B 14160 C 15880 CONN. PANEL TOTAL 45440 KVA MAX. CONN. LINE CURRENT 132 AMPS

(KVA) PANEL TOTAL 45.44 + L.C.L. (25) 0.00 = 45.44 KVA BALANCED CURRENT 126 AMPS DESIGN LOAD ______ KVA

VOLTAGE 120/208 3Ø, 4W. BUS AMPS 100A MAIN BREAKER ☐ A.F. ______ A.T. LUGS ONLY ☒

PANEL '2LBA'

LOCATION ELE. ROOM-2ND FLOOR-NORTH WING TOP FEED ☒ SURFACE MTG. ☒ BOTTOM FEED ☐ FLUSH MTG. ☐ REMARKS ______

DESCRIPTION	A	B	C	LCL	L	R	M	CB	CKT	CKT	CB	L	R	M	LCL	A	B	C	DESCRIPTION
CONDENSATE PUM, FCU-1	200						1	15A-1P	1	2	15A-1P			1		200			CONDENSATE PUMP, FCU-2
FCU-1		400					1	15A-2P	3	4	15A-2P			1			400		FCU-2
-			400				-	-	5	6	-			-				400	-
FCU-5	560						1	15A-2P	7	8	15A-2P			1		200			FCU-3
-		560					-	-	9	10	-			-			200		-
CONDENSATE PUMP, FCU-5			200				1	15A-1P	11	12	20A-1P			3				150	MOTORIZED WINDOW SHADE IN S.W.
SPARE								20A-1P	13	14	15A-1P			1		200			CONDENSATE PUMP,FCU-6
FCU-8		200					1	15A-2P	15	16	15A-2P			1			560		FCU-6
-			200				-	-	17	18	-			-				560	-
IDF ROOM HS270	1200						1	20A-2P	19	20	20A-1P			6		400			MOTORIZED WINDOW IN E.W.
							-	-	21	22				5			300		MOTORIZED WINDOW IN E.W.
			2000			1		30A-1P	23	24									SPARE
	720					4		20A-1P	25	26									
		720				4			27	28									
SPARE									29	30									
									31	32									SPACE
									33	34									
									35	36									
									37	38									
									39	40									
									41	42									
SUB TOTALS	2680	1880	2800													1000	1460	1110	SUB TOTALS

CONN. PHASE TOTAL: A 3680 B 3340 C 3910 CONN. PANEL TOTAL 10930 KVA MAX. CONN. LINE CURRENT 33 AMPS

(KVA) PANEL TOTAL 10.93 + L.C.L. (25) 0.00 = 10.93 KVA BALANCED CURRENT 30 AMPS DESIGN LOAD ______ KVA

VOLTAGE 120/208 3Ø, 4W. BUS AMPS 225A MAIN BREAKER ☒ 225A A.F. ______ A.T. LUGS ONLY ☐

PANEL '2LC'

LOCATION SECOND FLOOR ELECTRICAL ROOM TOP FEED ☒ SURFACE MTG. ☒ BOTTOM FEED ☐ FLUSH MTG. ☐ REMARKS ______

DESCRIPTION	A	B	C	LCL	L	R	M	CB	CKT	CKT	CB	L	R	M	LCL	A	B	C	DESCRIPTION
CU-1	3675						1	40A-3P	1	2	30A-3P			1		2390			CU-7
-		3675					-	-	3	4	-			-			2390		-
-			3675				-	-	5	6	-			-				2390	-
CU-5	3120						1	30A-2P	7	8	30A-3P			1		2390			CU-8
-		3120					-	-	9	10	-			-			2390		-
CU-3			2165				1	30A-2P	11	12	-			-				2390	-
-	2165						-	-	13	14	20A-1P		3			540			ROOF POWER
CU-6		3120						30A-2P	15	16							720		
-			3120				-	-	17	18								360	
CU-4	3120						1	30A-2P	19	20	15A-2P			1		200			FCU-10
-		3120					-	-	21	22	-			-			200		-
EF-2			605					15A-1P	23	24	15A-2P			1				200	FCU-9
SPARE								20A-1P	25	26	-			-		200			-
									27	28									SPARE
									29	30									
									31	32									
									33	34									
									35	36									
									37	38									
									39	40									
									41	42									
SUB TOTALS	12080	13035	9565													5720	5700	5340	SUB TOTALS

CONN. PHASE TOTAL: A 17800 B 18735 C 14905 CONN. PANEL TOTAL 51440 KVA MAX. CONN. LINE CURRENT 156 AMPS

(KVA) PANEL TOTAL 51.44 + L.C.L. (25) 0.00 = 51.44 KVA BALANCED CURRENT 143 AMPS DESIGN LOAD ______ KVA

'1LA'	'2LA'
'1LB'	'2LB'
'1LC'	'2LBA'
'1LK'	'2LC'

tBP
architecture planning interiors management

LICENSED ARCHITECT JIM G. PAN, AIA NO. C26074 REN. 4-30-11 STATE OF CALIFORNIA

tBP/Architecture
5455 Wilshire Boulevard, Suite 1200
Los Angeles, CA 90036-4242
ph: 323. 556. 3788 fx: 323. 556. 3799

architect

S&K ENGINEERS
421 EAST HUNTINGTON DRIVE
MONROVIA, CALIFORNIA 91016
626-930-1383 Fax: 626-930-1385
Job No: 07034

REGISTERED PROFESSIONAL ENGINEER LESTER S. JUNG No. E10979 Exp. 6/30/2011 ELECTRICAL STATE OF CALIFORNIA

consultant

IDENTIFICATION STAMP
DIV. OF THE STATE ARCHITECT
OFFICE OF REGULATION SERVICES
File No. 19-C11
Appl No. 03-112201
AC ____ FLS ____ SS ____
DATE ______

DSA Los Angeles Basin Regional Office
700 North Alameda Street, Suite 5-500
Los Angeles, California 90012
ph: 213/897-3995 fx: 213/897-3159/0726

agency

ANTELOPE VALLEY COLLEGE HEALTH & SCIENCE BUILDING

ANTELOPE VALLEY COMMUNITY COLLEGE DISTRICT
3041 WEST AVENUE K
LANCASTER, CA 93536-5426

owner

tBP project number : 20641.00

file name: A0-0101-1FP.dwg

drawn by: K.U. checked by: L.J.

date: July 30, 2009 - 100% CD

Rev:	date:	description:
1	11/16/09	ADDENDUM #1
2	02/26/10	ADDENDUM #2

THIS DRAWING AND THE DESIGNS, DEPICTIONS, IDEAS AND OTHER INFORMATION CONTAINED HEREIN CONSTITUTE UNPUBLISHED WORK OF tBP/ARCHITECTURE AND SHALL REMAIN THE PROPERTY OF tBP/ARCHITECTURE IN PERPETUITY. NO PART THEREOF SHALL BE REPRODUCED, DISCLOSED, DISTRIBUTED, SOLD, PUBLISHED OR OTHERWISE USED IN ANY WAY WITHOUT THE ADVANCED EXPRESS WRITTEN CONSENT OF tBP/ARCHITECTURE.

drawing title:

PANEL SCHEDULES

drawing no:

E0.4

drawing x of x

VOLTAGE 120/208 3ø, 4W. BUS AMPS 225A MAIN BREAKER ☒ 225A A.F. ____ A.T. LUGS ONLY ☐

PANEL "1LKA"

LOCATION KITCHEN ROOM TOP FEED ☒ BOTTOM FEED ☐ SURFACE MTG. ☒ FLUSH MTG. ☐ REMARKS

DESCRIPTION	VOLT-AMPS A	B	C	LCL	OUTLETS L	R	M	CB	CKT	CKT	CB	OUTLETS L	R	M	LCL	VOLT-AMPS A	B	C	DESCRIPTION
F1.7-DISPOSER	696					1		15A-1P	1	2	30A-2P		1			2415			F1.5-COOKTOP
F2.1-DISHWASHER, U.C.		1092				1		20A-1P	3	4	–		–				2415		F1.5-COOKTOP
F1.6-COUNTER W/SINK /FAUCET			2400			1		30A-1P	5	6	15A-1P		1					1584	OVEN, MICROWAVE
	2400					1			7	8	30A-1P		1			2400			COUNTER W/SINK FACUCET
		2400				1			9	10	20A-1P		1				360		AV EQUIPMENT RACK
POWER			540			3		20A-1P	11	12			1					360	AV1604
DISPOSER	696					1		15A-1P	13	14				2		960			CONVENTION OVEN 1.4
F2.1-DISHWASHER, U.C.		1092				1		20A-1P	15	16				2			960		CONVENTION OVEN F1.4
COUNTER W/ FACAUCETQ			2400			1		30A-1P	17	18	30A-2P			1				2415	COOKTOP F1.5
VENTILATION 1.1	600						2	20A-1P	19	20	–			–		2415			COOKTOP F1.5
VENTILATION F1.1		600					2		21	22	30A-2P			1			2415		COOKTOP F1.5
COOKTOP 1.5			2415					30A-2P	23	24	–			–				2415	COOKTOP F1.5
	2415							–	25	26	20A-1P			2		600			VENTILATION
		2415						30A-2P	27	28	20A-1P			1			600		EXHAUST 4.1 & F4.1
			2415					–	29	30				1				180	FIRE SUPPRSSION 3.3
MOTORIZED WINDOW SHADE IN N.W.	100						2	20A-1P	31	32				1		1000			ICE-MAKER
DRYER		1000					1		33	34									SPARE
WASHER			1000				1		35	36									
SPARE									37	38									
									39	40									
									41	42									
SUB TOTALS	6907	8599	11170													9790	6750	6954	SUB TOTALS

CONN. PHASE TOTAL: A 16697 B 15349 C 18124 CONN. PANEL TOTAL 50170 KVA MAX. CONN. LINE CURRENT 151 AMPS

(KVA) PANEL TOTAL 50.17 + L.C.L. (,25) 0.00 = 50.17 KVA BALANCED CURRENT 139 AMPS DESIGN LOAD ____ KVA

VOLTAGE 277/480 3ø, 4W. BUS AMPS 100 MAIN BREAKER ☐ ____ A.F. ____ A.T. LUGS ONLY ☒

PANEL 2HB

LOCATION ELECTRICAL RM.-2ND FLOOR TOP FEED ☐ BOTTOM FEED ☐ SURFACE MTG. ☒ FLUSH MTG. ☐ REMARKS

DESCRIPTION	VOLT-AMPS A	B	C	LCL	OUTLETS L	R	M	CB	CKT	CKT	CB	OUTLETS L	R	M	LCL	VOLT-AMPS A	B	C	DESCRIPTION
CORRIDOR LIGHTING	715			o	22			20A-1P	1	2	20A-1P	46			o	3747			LIGHTNG 2ND FLOOR
CORRIDOR LIGHTING		96		o	16				3	4		35			o		3706		LIGHTNG 2ND FLOOR
CORRIDOR LIGHTING			809	o	15				5	6		32			o			3263	LIGHTNG 2ND FLOOR
SPARE									7	8		30			o	2866			LIGHTNG 2ND FLOOR
									9	10		39			o		2891		LIGHTNG 2ND FLOOR
									11	12									SPARE
									13	14									
									15	16									
									17	18									
									19	20									
									21	22									
									23	24									
SPACE									25	26									SPACE
									27	28									
									29	30									
									31	32									
									33	34									
									35	36									
									37	38									
									39	40									
									41	42									
SUB TOTALS	715	96	809													6613	6597	3263	SUB TOTALS

CONN. PHASE TOTAL: A 7328 B 6693 C 4072 CONN. PANEL TOTAL 18093 KVA MAX. CONN. LINE CURRENT 26 AMPS

(KVA) PANEL TOTAL 18.09 + L.C.L. (,25) 4.52 = 22.62 KVA BALANCED CURRENT 27 AMPS DESIGN LOAD ____ KVA

VOLTAGE 277/480 3ø, 4W. BUS AMPS 100 MAIN BREAKER ☐ ____ A.F. ____ A.T. LUGS ONLY ☒

PANEL 2HA

LOCATION ELECTRICAL RM.-2ND FLOOR TOP FEED ☐ BOTTOM FEED ☐ SURFACE MTG. ☒ FLUSH MTG. ☐ REMARKS

DESCRIPTION	VOLT-AMPS A	B	C	LCL	OUTLETS L	R	M	CB	CKT	CKT	CB	OUTLETS L	R	M	LCL	VOLT-AMPS A	B	C	DESCRIPTION
LIGHTING 2ND FLOOR	3505			o	28			20A-1P	1	2	20A-1P	17			o	485			CORRIDOR LIGHTING
LIGHTING 2ND FLOOR		3497		o	58				3	4		25			o		484		CORRIDOR LIGHTING
LIGHTING 2ND FLOOR			3340	o	21				5	6									SPARE
LIGHTING 2ND FLOOR	2891			o	26				7	8									
LIGHTING 2ND FLOOR		3587		o	29				9	10									
LIGHTING 2ND FLOOR			2646	o	16				11	12									
LIGHTING 2ND FLOOR	3209			o	20				13	14									
SPARE									15	16									
									17	18									
									19	20									
									21	22									
SPACE									23	24									
									25	26									SPACE
									27	28									
									29	30									
									31	32									
									33	34									
									35	36									
									37	38									
									39	40									
									41	42									
SUB TOTALS	9605	7084	5986													485	484	0	SUB TOTALS

CONN. PHASE TOTAL: A 10090 B 7568 C 5986 CONN. PANEL TOTAL 23644 KVA MAX. CONN. LINE CURRENT 36 AMPS

(KVA) PANEL TOTAL 23.64 + L.C.L. (,25) 5.91 = 29.56 KVA BALANCED CURRENT 36 AMPS DESIGN LOAD ____ KVA

VOLTAGE 277/480 3ø, 4W. BUS AMPS 100 MAIN BREAKER ☒ ____ A.F. ____ A.T. LUGS ONLY ☐

PANEL 2HB-LS

LOCATION ELECTRICAL RM.-2ND FLOOR TOP FEED ☐ BOTTOM FEED ☐ SURFACE MTG. ☒ FLUSH MTG. ☐ REMARKS

DESCRIPTION	VOLT-AMPS A	B	C	LCL	OUTLETS L	R	M	CB	CKT	CKT	CB	OUTLETS L	R	M	LCL	VOLT-AMPS A	B	C	DESCRIPTION
SPARE								20A-1P	1	2	20A-1P	33			o	1695			LIGHTING
									3	4		7			o		453		LIGHTING
									5	6		32			o			1809	LIGHTING
									7	8									SPARE
									9	10									SPARE
SPACE									11	12									SPACE
									13	14									
									15	16									
									17	18									
									19	20									
									21	22									
									23	24									
									25	26									
									27	28									
									29	30									
									31	32									
									33	34									
									35	36									
									37	38									
									39	40									
									41	42									
SUB TOTALS	0	0	0													1695	453	1809	SUB TOTALS

CONN. PHASE TOTAL: A 1695 B 453 C 1809 CONN. PANEL TOTAL 3957 KVA MAX. CONN. LINE CURRENT 7 AMPS

(KVA) PANEL TOTAL 3.96 + L.C.L. (,25) 0.99 = 4.95 KVA BALANCED CURRENT 6 AMPS DESIGN LOAD ____ KVA

LIGHTING CONTROL PANEL "LCP3" LOCATION ELECTRICAL RM.-2ND FLOOR

RELAY	LINE FEED	ZONE	LOAD CONTROLLED	RELAY	LINE FEED	ZONE	LOAD CONTROLLED
1			SPARE	2	2HA-2	1	CORRIDOR LIGHTING
3			SPARE	4	2HA-4	2	CORRIDOR LIGHTING

REMARKS: LCP3- MANUFACTURER – LIGHTING CONTROL & DESIGN
MODEL – THE BLUE BOX: GR1404/4 – SLAVE – HL – SM

VOLTAGE 120/208 3ø, 4W. BUS AMPS 100 MAIN BREAKER ☒ 100 A.F. ____ A.T. LUGS ONLY ☐

PANEL "1LA-LS"

LOCATION FIRST FLOOR-NORTH WING TOP FEED ☐ BOTTOM FEED ☐ SURFACE MTG. ☒ FLUSH MTG. ☐ REMARKS IN ELECTRICAL ROOM

DESCRIPTION	VOLT-AMPS A	B	C	LCL	OUTLETS L	R	M	CB	CKT	CKT	CB	OUTLETS L	R	M	LCL	VOLT-AMPS A	B	C	DESCRIPTION
FIRE ALARM CONTROL PANEL	500						1	20A-1P	1	2	20A-1P	2	1		o	415			SOUTH WING ELEVATOR PIT
BATTERY CABINET		500					1		3	4		2	2		o		415		EAST WING ELEVATOR PIT
NORTH WING ELEVATOR PIT			415	o	2	1			5	6				1				500	BOOSTER PUMP "BPS-2"
WATER BELL	100						1		7	8				1		500			BOOSTER PUMP "BPS-1"
SFD IN SOUTH & NORTH WING		350					7		9	10	15A-1P			1			100		POWER AT DOOR 107
SFD IN EAST WING			500				10		11	12				1				100	POWER AT DOOR 111
POWER AT DOOR 149A	100						1	15A-1P	13	14				1		100			POWER AT DOOR 117A
POWER AT DOOR 146		100					1		15	16				1			100		POWER AT DOOR 129
CARD READER PANEL			500				1		17	18				1				100	POWER AT DOOR 175C
CARD READER PANEL	500						1		19	20	20A-1P			1		1000			GEN. BATTERY CHARGER
POWER AT DOOR 183		100					1		21	22									SPARE
POWER AT DOOR 175A			100				1		23	24									
SPARE								20A-1P	25	26									
									27	28									
									29	30									SPACE
SPACE									31	32									
									33	34									
									35	36									
									37	38	100A-3P			1		500			PANEL 2LA-LS
									39	40	–			–			–		–
									41	42	–			–				–	–
SUB TOTALS	1200	1050	1515													2515	615	700	SUB TOTALS

CONN. PHASE TOTAL: A 3715 B 1665 C 2215 CONN. PANEL TOTAL 7595 KVA MAX. CONN. LINE CURRENT 31 AMPS

(KVA) PANEL TOTAL 7.60 + L.C.L. (,25) 0.31 = 7.91 KVA BALANCED CURRENT 22 AMPS DESIGN LOAD ____ KVA

VOLTAGE 277/480 3ø, 4W. BUS AMPS 100 MAIN BREAKER ☒ ____ A.F. ____ A.T. LUGS ONLY ☐

PANEL 2HA-LS

LOCATION ELECTRICAL RM.-2ND FLOOR TOP FEED ☐ BOTTOM FEED ☐ SURFACE MTG. ☒ FLUSH MTG. ☐ REMARKS

DESCRIPTION	VOLT-AMPS A	B	C	LCL	OUTLETS L	R	M	CB	CKT	CKT	CB	OUTLETS L	R	M	LCL	VOLT-AMPS A	B	C	DESCRIPTION
LIGHTING	2231			o	28			20A-1P	1	2	20A-1P								SPARE
LIGHTING		1386		o	20				3	4									
SMOKE FIRE DAMPER HS201			50				1		5	6									
SPARE									7	8									
									9	10									
SPACE									11	12									SPACE
									13	14									
									15	16									
									17	18									
									19	20									
									21	22									
									23	24									
									25	26									
									27	28									
									29	30									
									31	32									
									33	34									
									35	36									
									37	38									
									39	40									
									41	42									
SUB TOTALS	2231	1386	50													0	0	0	SUB TOTALS

CONN. PHASE TOTAL: A 2231 B 1386 C 50 CONN. PANEL TOTAL 3667 KVA MAX. CONN. LINE CURRENT 8 AMPS

(KVA) PANEL TOTAL 3.67 + L.C.L. (,25) 0.90 = 4.57 KVA BALANCED CURRENT 5 AMPS DESIGN LOAD ____ KVA

LIGHTING CONTROL PANEL "LCP4" LOCATION ELECTRICAL RM.-2ND FLOOR

RELAY	LINE FEED	ZONE	LOAD CONTROLLED	RELAY	LINE FEED	ZONE	LOAD CONTROLLED
1	2HB-1	1	CORRIDOR LIGHTING	2	2HB-5	2	CORRIDOR LIGHTING
3	2HB-3	2	CORRIDOR LIGHTING	4			SPARE

REMARKS: LCP4- MANUFACTURER – LIGHTING CONTROL & DESIGN
MODEL – THE BLUE BOX: GR1404/4 – DTC – HL – SM

VOLTAGE 277/480 3ø, 4W. BUS AMPS 225 MAIN BREAKER ☒ 150 A.F. ____ A.T. LUGS ONLY ☐

PANEL E1HA-LS

LOCATION ELECTRICAL RM. – FIRST FLOOR TOP FEED ☐ BOTTOM FEED ☐ SURFACE MTG. ☒ FLUSH MTG. ☐ REMARKS

DESCRIPTION	VOLT-AMPS A	B	C	LCL	OUTLETS L	R	M	CB	CKT	CKT	CB	OUTLETS L	R	M	LCL	VOLT-AMPS A	B	C	DESCRIPTION
PANEL 1HA-LS	2308			o				100A-3P	1	2	100A-3P				o	1342			PANEL 1HB-LS
		897		o				–	3	4	–				o		2105		–
			903	o				–	5	6	–							–	–
PANEL 2HA-LS	2231			o				100A-3P	7	8	100A-3P				o	1695			PANEL 2HB-LS
		1386		o				–	9	10	–				o		453		–
			–					–	11	12	–				o			1809	–
									13	14	50A-3P					1500			TRANSFORMER ET-LS
									15	16	–						1500		
									17	18	–							1500	
									19	20									
									21	22									
									23	24									
									25	26									
									27	28									
									29	30									
									31	32									
									33	34									
									35	36									
									37	38									
									39	40									
									41	42									
SUB TOTALS	4539	2283	903													4537	4058	3309	SUB TOTALS

CONN. PHASE TOTAL: A 9076 B 6341 C 4212 CONN. PANEL TOTAL 19629 KVA MAX. CONN. LINE CURRENT 33 AMPS

(KVA) PANEL TOTAL 19.63 + L.C.L. (,25) 3.78 = 23.41 KVA BALANCED CURRENT 28 AMPS DESIGN LOAD ____ KVA

VOLTAGE 120/208 3ø, 4W. BUS AMPS 100 MAIN BREAKER ☒ 100 A.F. ____ A.T. LUGS ONLY ☐

PANEL "E2LA"

LOCATION SECOND FLR ELEC ROOM TOP FEED ☒ BOTTOM FEED ☐ SURFACE MTG. ☒ FLUSH MTG. ☐ REMARKS

DESCRIPTION	VOLT-AMPS A	B	C	LCL	OUTLETS L	R	M	CB	CKT	CKT	CB	OUTLETS L	R	M	LCL	VOLT-AMPS A	B	C	DESCRIPTION
SPARE								20A-1P	1	2	20A-1P								SPARE
									3	4									
									5	6									
									7	8									
									9	10									
SPACE									11	12									SPACE
									13	14									
									15	16									
									17	18									
									19	20									
									21	22									
									23	24									
									25	26									
									27	28									
									29	30									
									31	32									
									33	34									
									35	36									
									37	38									
									39	40									
									41	42									
SUB TOTALS	0	0	0													0	0	0	SUB TOTALS

CONN. PHASE TOTAL: A 0 B 0 C 0 CONN. PANEL TOTAL 0 KVA MAX. CONN. LINE CURRENT 0 AMPS

(KVA) PANEL TOTAL 0.00 + L.C.L. (,25) 0.00 = 0.00 KVA BALANCED CURRENT 0 AMPS DESIGN LOAD ____ KVA

"1LKA"	"2HB"
"2HA"	"2HB-LS"
"LCP3"	"1LA-LS"
"2HA-LS"	"LCP4"
"E1HA-LS"	"E2LA"

tBP
architecture planning interiors management

LICENSED ARCHITECT JIM G. FAN, AIA NO. C26074 REN. 4-30-11 STATE OF CALIFORNIA

tBP/Architecture
5455 Wilshire Boulevard, Suite 1200
Los Angeles, CA 90036-4242
ph: 323. 556. 3788 fx: 323. 556. 3799

architect

S&K ENGINEERS
421 EAST HUNTINGTON DRIVE
MONROVIA, CALIFORNIA 91016
626-930-1383 Fax: 626-930-1385
Job No: 07034

REGISTERED PROFESSIONAL ENGINEER LESTER S. JUNG No. E10979 Exp. 6/30/2011 ELECTRICAL STATE OF CALIFORNIA

consultant

IDENTIFICATION STAMP
DIV. OF THE STATE ARCHITECT
OFFICE OF REGULATION SERVICES
File No. 19-C11
Appl No. 03-112201
AC ____ FLS ____ SS ____
DATE ____

DSA Los Angeles Basin Regional Office
700 North Alameda Street, Suite 5-500
Los Angeles, California 90012
ph: 213/897-3995 fx: 213/897-3159/0726

agency

ANTELOPE VALLEY COLLEGE HEALTH & SCIENCE BUILDING

ANTELOPE VALLEY COMMUNITY COLLEGE DISTRICT
3041 WEST AVENUE K
LANCASTER, CA 93536-5426

owner

tBP project number : 20641.00

file name: A0-0101-1FP.dwg

drawn by: K.U. checked by: L.J.

date: July 30, 2009 - 100% CD

Rev:	date:	description:
1	11/16/09	ADDENDUM #1
2	02/26/10	ADDENDUM #2

THIS DRAWING AND THE DESIGNS, DEPICTIONS, IDEAS AND OTHER INFORMATION CONTAINED HEREIN CONSTITUTE UNPUBLISHED WORK OF tBP/ARCHITECTURE AND SHALL REMAIN THE PROPERTY OF tBP/ARCHITECTURE IN PERPETUITY. NO PART THEREOF SHALL BE REPRODUCED, DISCLOSED, DISTRIBUTED, SOLD, PUBLISHED OR OTHERWISE USED IN ANY WAY WITHOUT THE ADVANCED EXPRESS WRITTEN CONSENT OF tBP/ARCHITECTURE.

drawing title:
PANEL SCHEDULES

drawing no:
E0.6

drawing x of x

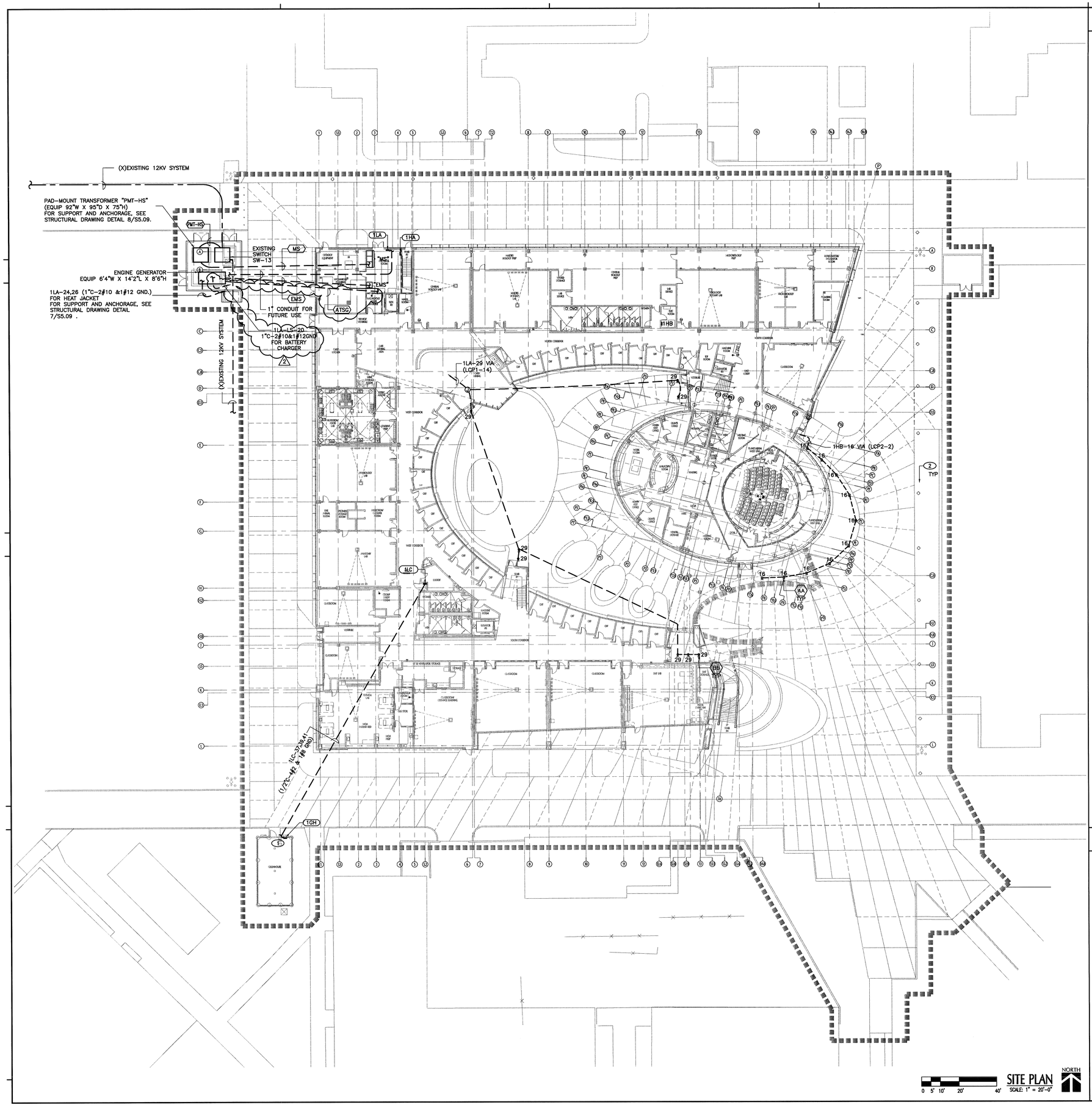

SITE PLAN
SCALE: 1" = 20'-0"
0 5' 10' 20' 40'
NORTH

KEYNOTES

GENERAL NOTES

1. ADD POWER PANEL INSIDE GREEN-HOUSE, SEE DWG E6.1 DETAIL "C" FOR LIGHTING PLAN.
2. EXISTING LIGHTING POLES TO REMAIN.

KEY PLAN

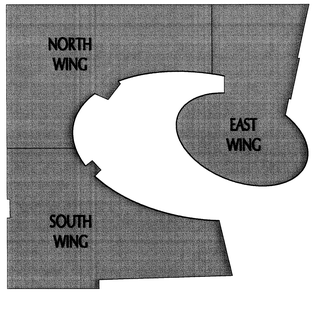

NORTH

tBP
architecture
planning
interiors
management
tBP/Architecture
5455 Wilshire Boulevard, Suite 1200
Los Angeles, CA 90036-4242
ph: 323. 556. 3788 fx: 323. 556. 3799
LICENSED ARCHITECT
STATE OF CALIFORNIA
architect

S&K ENGINEERS
421 EAST HUNTINGTON DRIVE
MONROVIA, CALIFORNIA 91016
626-930-1365 Fax: 626-930-1365
JOB No. 07004
REGISTERED PROFESSIONAL ENGINEER
STATE OF CALIFORNIA
consultant

IDENTIFICATION STAMP
DIV. OF THE STATE ARCHITECT
OFFICE OF REGULATION SERVICES
File No. 19-C11
Appl No. 03-112201
AC. ____ RS ____ SS ____
DATE ____

DSA Los Angeles Basin Regional Office
700 North Alameda Street, Suite 5-500
Los Angeles, California 90012
ph: 213/897-3995 fx: 213/897-3159/0726
agency

ANTELOPE VALLEY COLLEGE HEALTH & SCIENCE BUILDING

ANTELOPE VALLEY COMMUNITY COLLEGE DISTRICT
3041 WEST AVENUE K
LANCASTER, CA 93536-5426

owner

tBP project number : 20641.00
file name: A0-0101-1FP.dwg
drawn by: K.U. checked by: L.J.
date: July 30, 2009 - 100% CD

Rev:	date:	description:
1	11/16/09	ADDENDUM #1
2	02/26/10	ADDENDUM #2

THIS DRAWING AND THE DESIGNS, DEPICTIONS, IDEAS AND OTHER INFORMATION CONTAINED HEREIN CONSTITUTE UNPUBLISHED WORK OF tBP/ARCHITECTURE AND SHALL REMAIN THE PROPERTY OF tBP/ARCHITECTURE IN PERPETUITY. NO PART THEREOF SHALL BE REPRODUCED, DISCLOSED, DISTRIBUTED, SOLD, PUBLISHED OR OTHERWISE USED IN ANY WAY WITHOUT THE ADVANCED EXPRESS WRITTEN CONSENT OF tBP/ARCHITECTURE.

drawing title:
ELECTRICAL SITE PLAN

drawing no:
E1.1
drawing x of x

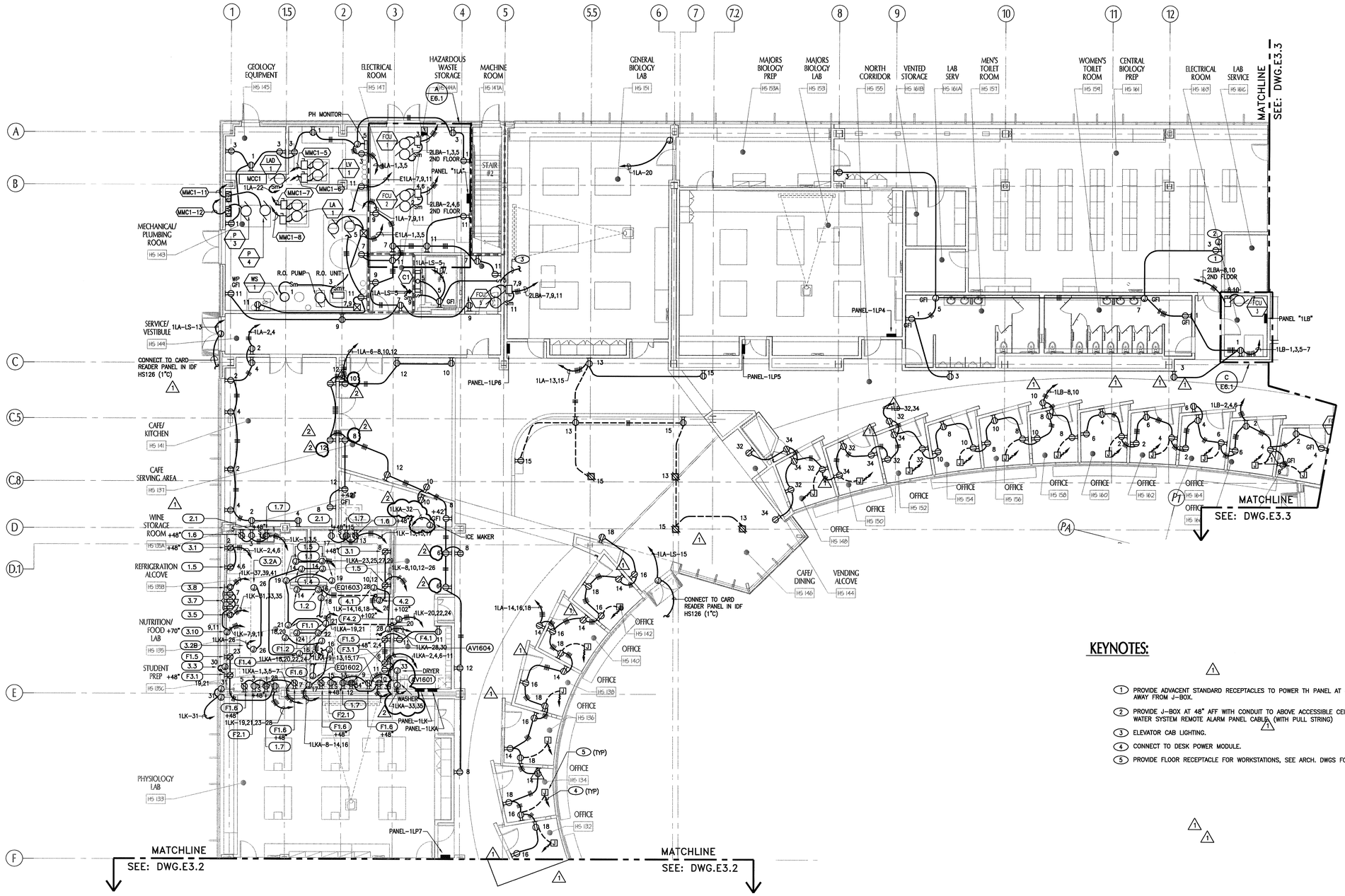

KEYNOTES:

1. PROVIDE ADVACENT STANDARD RECEPTACLES TO POWER TH PANEL AT 48" AFF ABOUT 12" AWAY FROM J-BOX.
2. PROVIDE J-BOX AT 48" AFF WITH CONDUIT TO ABOVE ACCESSIBLE CEILING FOR PURIFIED WATER SYSTEM REMOTE ALARM PANEL CABLE (WITH PULL STRING)
3. ELEVATOR CAB LIGHTING.
4. CONNECT TO DESK POWER MODULE.
5. PROVIDE FLOOR RECEPTACLE FOR WORKSTATIONS, SEE ARCH. DWGS FOR EXACT LOCATION.

0 2' 4' 8' 16'

FIRST FLOOR POWER PLAN - NORTH WING

SCALE: 1/8" = 1'-0"

NORTH

KEY PLAN

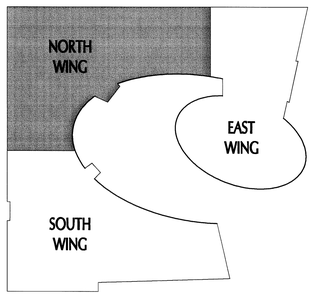

KITCHEN EQUIPMENT ELECTRICAL

ITEM NUMBER	QUANITY	DESCRIPTION (ITEM NUMBER CORRESPONDS TO FOODS SERVICE EQUIPMENT)	VOLTAGE	KW	AMPS	HP	PHASE	CONN.	REMARKS
1.1	2	VENTILATOR, EXHAUST	120		1.5		1	–	FOR EXACT LOCATION & HEIGHT OF EQUIPMENT, SEE KITCHEN DWG
1.2	2	FIRE SUPPRESSION SYSTEM	120		10.0		1	–	FOR EXACT LOCATION & HEIGHT OF EQUIPMENT, SEE KITCHEN DWG
1.4	2	RANGE (2) O.B. /GRIDDLE W/ CONVECTION OVEN	120		4.0		1	–	FOR EXACT LOCATION & HEIGHT OF EQUIPMENT, SEE KITCHEN DWG
1.5	3	COOKTOP, DROP-IN ELECTRIC	208		23.2		1	–	FOR EXACT LOCATION & HEIGHT OF EQUIPMENT, SEE KITCHEN DWG
1.6	2	COUNTER W/SINK /FAUCET	120		(3)20.0		1	–	FOR EXACT LOCATION & HEIGHT OF EQUIPMENT, SEE KITCHEN DWG
1.7	2	DISPOSER	120		5.8		1	–	FOR EXACT LOCATION & HEIGHT OF EQUIPMENT, SEE KITCHEN DWG
2.1	2	DISHWASHER, U.C.	120		9.1		1	–	FOR EXACT LOCATION & HEIGHT OF EQUIPMENT, SEE KITCHEN DWG
3.1	2	OVEN, MICROWAVE	120		13.2		1	–	FOR EXACT LOCATION & HEIGHT OF EQUIPMENT, SEE KITCHEN DWG
3.2A	1	VENTILATION, EXHAUST	120		2.5		1	–	FOR EXACT LOCATION & HEIGHT OF EQUIPMENT, SEE KITCHEN DWG
3.2B	1	VENTILATION, EXHAUST	120		2.5		1	–	FOR EXACT LOCATION & HEIGHT OF EQUIPMENT, SEE KITCHEN DWG
3.3	1	FIRE SUPPRESSION SYSTEM	120		10.0		1	–	FOR EXACT LOCATION & HEIGHT OF EQUIPMENT, SEE KITCHEN DWG
3.5	1	KETTLE, 20 GAL, TITL FLOOR	208		34.2		3	–	FOR EXACT LOCATION & HEIGHT OF EQUIPMENT, SEE KITCHEN DWG
3.7	1	FRYER ASSEMBLY	120		(3)1.0		1	–	FOR EXACT LOCATION & HEIGHT OF EQUIPMENT, SEE KITCHEN DWG

CONTINUE

KITCHEN EQUIPMENT ELECTRICAL

ITEM NUMBER	QUANITY	DESCRIPTION (ITEM NUMBER CORRESPONDS TO FOODS SERVICE EQUIPMENT)	VOLTAGE	KW	AMPS	HP	PHASE	CONN.	REMARKS
3.8	1	STEAMER, ELECTRIC 1-SECTION	208		26.1		3	–	FOR EXACT LOCATION & HEIGHT OF EQUIPMENT, SEE KITCHEN DWG
3.10	1	OVEN, CONVECTION ELECTRIC 2-SECTION	208		32.7		1	–	FOR EXACT LOCATION & HEIGHT OF EQUIPMENT, SEE KITCHEN DWG
4.1	1	VENTILATOR, EXHAUST	120		2.5		3	–	FOR EXACT LOCATION & HEIGHT OF EQUIPMENT, SEE KITCHEN DWG
4.2	1	FIRE SUPPRESSION SYSTEM	120		10.0		1	–	FOR EXACT LOCATION & HEIGHT OF EQUIPMENT, SEE KITCHEN DWG

KITCHEN EQUIPMENT ELECTRICAL (FUTURE)

ITEM NUMBER	QUANITY	DESCRIPTION (ITEM NUMBER CORRESPONDS TO FOODS SERVICE EQUIPMENT)	VOLTAGE	KW	AMPS	HP	PHASE	CONN.	REMARKS
F1.1	2	VENTILATOR, EXHAUST	120		1.5		1	–	FOR EXACT LOCATION & HEIGHT OF EQUIPMENT, SEE KITCHEN DWG
F1.2	2	FIRE SUPPRESSION SYSTEM	120		10.0		1	–	FOR EXACT LOCATION & HEIGHT OF EQUIPMENT, SEE KITCHEN DWG
F1.4	2	RANGE (2) O.B. /GRIDDLE W/ CONVECTION OVEN	120		4.0		1	–	FOR EXACT LOCATION & HEIGHT OF EQUIPMENT, SEE KITCHEN DWG
F1.5	3	COOKTOP, DROP-IN ELECTRIC	208		23.2		1	–	FOR EXACT LOCATION & HEIGHT OF EQUIPMENT, SEE KITCHEN DWG
F1.6	2	COUNTER W/SINK /FAUCET	120		(3)20.0		1	–	FOR EXACT LOCATION & HEIGHT OF EQUIPMENT, SEE KITCHEN DWG
F1.7	2	DISPOSER	120		5.8		1	–	FOR EXACT LOCATION & HEIGHT OF EQUIPMENT, SEE KITCHEN DWG
F2.1	2	DISHWASHER, U.C.	120		9.1		1	–	FOR EXACT LOCATION & HEIGHT OF EQUIPMENT, SEE KITCHEN DWG
F4.1	1	VENTILATOR, EXHAUST	120		2.5		3	–	FOR EXACT LOCATION & HEIGHT OF EQUIPMENT, SEE KITCHEN DWG
F4.2	1	FIRE SUPPRESSION SYSTEM	120		10.0		1	–	FOR EXACT LOCATION & HEIGHT OF EQUIPMENT, SEE KITCHEN DWG

tBP architecture planning interiors management

tBP/Architecture
5455 Wilshire Boulevard, Suite 1200
Los Angeles, CA 90036-4242
ph: 323. 556. 3788 fx: 323. 556. 3799

architect

S&K ENGINEERS
421 EAST HUNTINGTON DRIVE
MONROVIA, CALIFORNIA 91016
626-930-1383 Fax: 626-930-1385
Job No: 07034

consultant

IDENTIFICATION STAMP
DIV. OF THE STATE ARCHITECT
OFFICE OF REGULATION SERVICES
File No. 19-C11
Appl No. 03-112201
AC ____ RS ____ SS ____
DATE ____

DSA Los Angeles Basin Regional Office
700 North Alameda Street, Suite 5-500
Los Angeles, California 90012
ph: 213/897-3995 fx: 213/897-3159/0726

agency

ANTELOPE VALLEY COLLEGE HEALTH & SCIENCE BUILDING

ANTELOPE VALLEY COMMUNITY COLLEGE DISTRICT
3041 WEST AVENUE K
LANCASTER, CA 93536-5426

owner

tBP project number : 20641.00
file name: A0-0101-1FP.dwg
drawn by: K.U. checked by: L.J.
date: July 30, 2009 - 100% CD

Rev:	date:	description:
1	11/16/09	ADDENDUM #1
2	02/26/10	ADDENDUM #2

THIS DRAWING AND THE DESIGNS, DEPICTIONS, IDEAS AND OTHER INFORMATION CONTAINED HEREIN CONSTITUTE UNPUBLISHED WORK OF tBP/ARCHITECTURE AND SHALL REMAIN THE PROPERTY OF tBP/ARCHITECTURE IN PERPETUITY. NO PART THEREOF SHALL BE REPRODUCED, DISCLOSED, DISTRIBUTED, SOLD, PUBLISHED OR OTHERWISE USED IN ANY WAY WITHOUT THE ADVANCED EXPRESS WRITTEN CONSENT OF tBP/ARCHITECTURE.

drawing title:
FIRST FLOOR POWER PLAN - NORTH WING

drawing no:
E3.1
drawing x of x

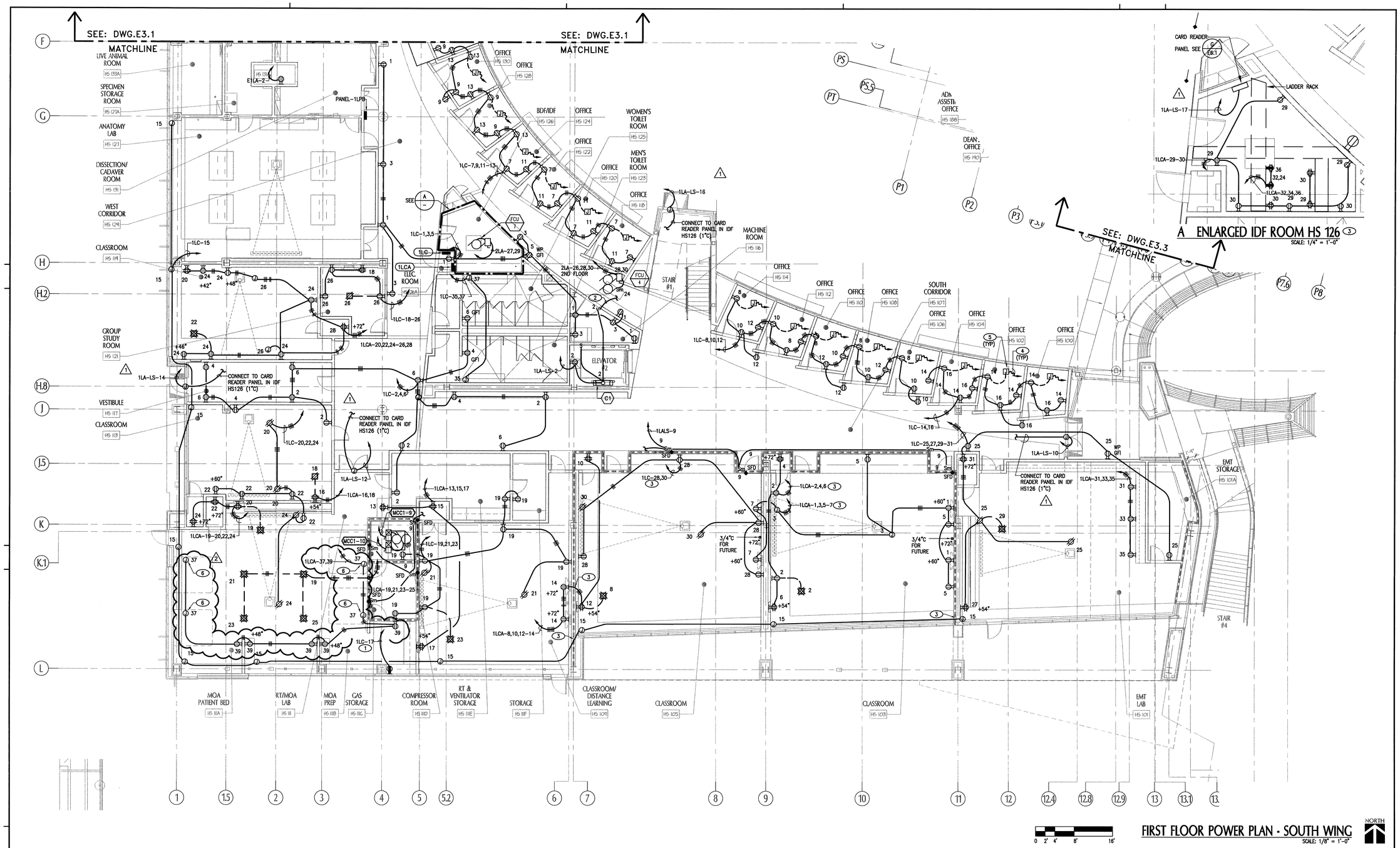

A ENLARGED IDF ROOM HS 126 (3)
SCALE: 1/4" = 1'-0"

FIRST FLOOR POWER PLAN - SOUTH WING
SCALE: 1/8" = 1'-0"

KEYNOTES

1. DEDICATED CIRCUIT FOR STEAM AUTOCLAVE STERILIZER.
2. ELEVATOR CAB LIGHTING.
3. SEE DETAIL (F / E6.1) FOR FIRE BARRIER WALL.

   NO CONDUIT SHALL BE ATTACHED TO PROTECTED ZONE OF BRACED FRAMES. COORDINATE LOCATION W/ STRUCTURAL.
4. CONNECT TO DESK POWER MODULE.
5. PROVIDE FLOOR RECEPTACLE FOR WORK-STATION, SEE ARCH. DWGS FOR EXACT LOCATIONS.
6. JUNCTION BOX FOR HEADWALL UNITS. (2)

KEY PLAN

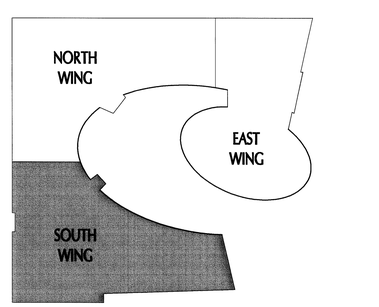

tBP
architecture
planning
interiors
management

tBP/Architecture
5455 Wilshire Boulevard, Suite 1200
Los Angeles, CA 90036-4242
ph: 323. 556. 3788 fx: 323. 556. 3799

architect

S&K ENGINEERS
421 EAST HUNTINGTON DRIVE
MONROVIA, CALIFORNIA 91016
626-930-1383 Fax: 626-930-1385
Job No: 07034

consultant

IDENTIFICATION STAMP
DIV. OF THE STATE ARCHITECT
OFFICE OF REGULATION SERVICES
File No. 19-C11
Appl No. 03-112201
AC. ____ RS ____ SS ____
DATE ____

DSA Los Angeles Basin Regional Office
700 North Alameda Street, Suite 5-500
Los Angeles, California 90012
ph: 213/897-3995 fx: 213/897-3159/0726

agency

ANTELOPE VALLEY COLLEGE HEALTH & SCIENCE BUILDING

ANTELOPE VALLEY COMMUNITY COLLEGE DISTRICT
3041 WEST AVENUE K
LANCASTER, CA 93536-5426

owner

tBP project number: 20641.00
file name: A0-0101-1FP.dwg
drawn by: K.U. checked by: L.J
date: July 30, 2009 - 100% CD

Rev:	date:	description:
1	11/16/09	ADDENDUM #1
2	02/26/10	ADDENDUM #2

THIS DRAWING AND THE DESIGNS, DEPICTIONS, IDEAS AND OTHER INFORMATION CONTAINED HEREIN CONSTITUTE UNPUBLISHED WORK OF tBP/ARCHITECTURE AND SHALL REMAIN THE PROPERTY OF tBP/ARCHITECTURE IN PERPETUITY. NO PART THEREOF SHALL BE REPRODUCED, DISCLOSED, DISTRIBUTED, SOLD, PUBLISHED OR OTHERWISE USED IN ANY WAY WITHOUT THE ADVANCED EXPRESS WRITTEN CONSENT OF tBP/ARCHITECTURE.

drawing title:
FIRST FLOOR POWER PLAN - SOUTH WING

drawing no:
E3.2
drawing X of X

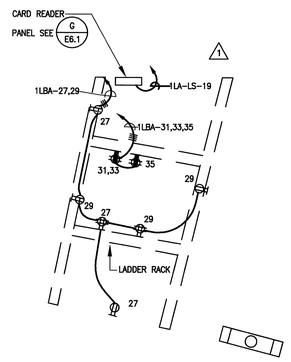

A. ENLARGED IDF ROOM HS170 (2)

SCALE: 1/4" = 1'-0"

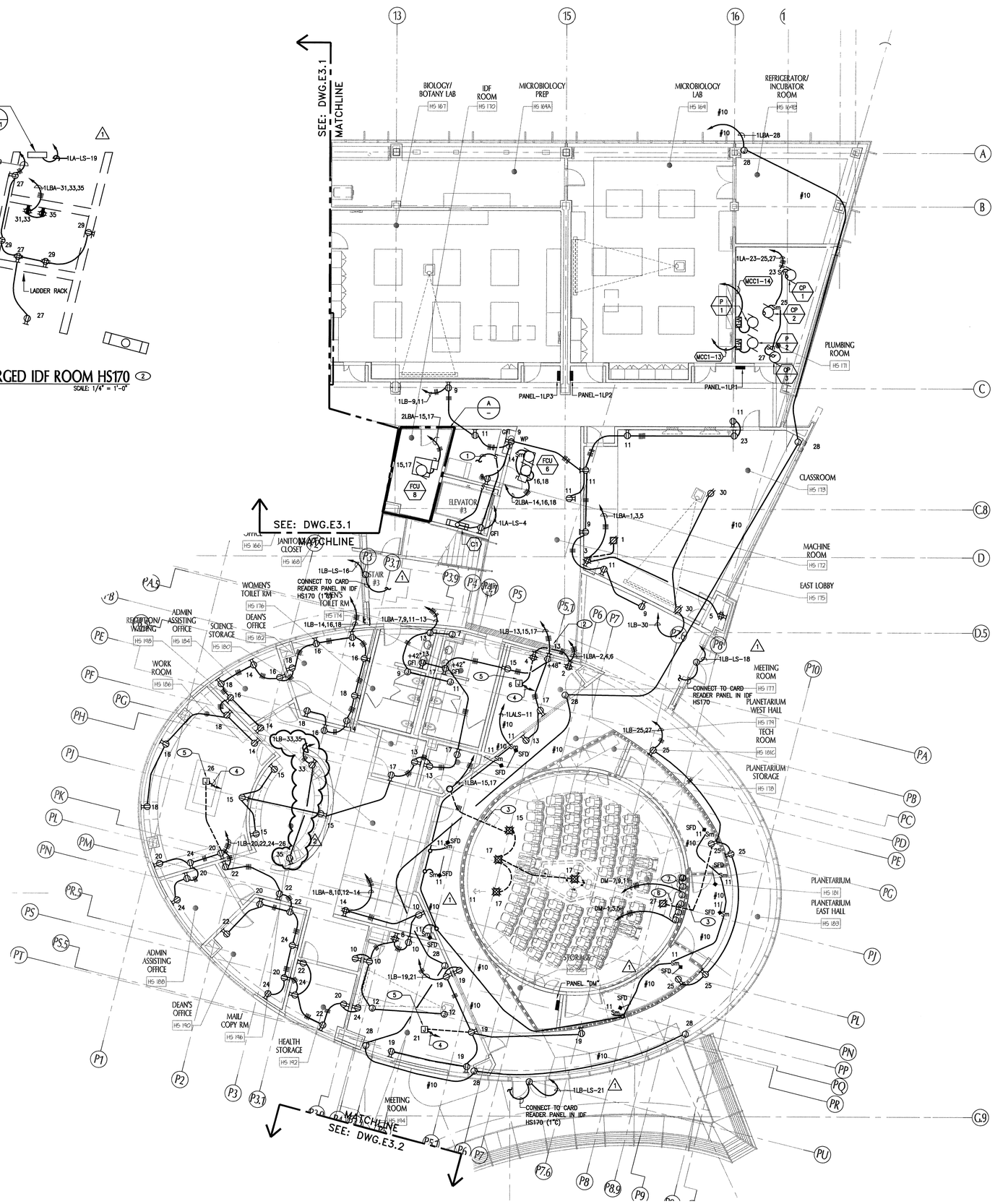

FIRST FLOOR POWER PLAN - EAST WING

SCALE: 1/8" = 1'-0"

KEYNOTES

1. ELEVATOR CAB LIGHTING.
2. SEE DETAIL (H / E6.1) FOR CONDUIT RUNNING THROUGH SEISMIC JOINT.
3. SEE DETAIL (F / E6.1) FOR FIRE BARRIER WALL.

   NO CONDUIT SHALL BE ATTACHED TO PROTECTED ZONED OF BRACED FRAMES. COORDINATE LOCATION W/STRUCTRAL.
4. CONNECT TO TABLE RECEPTACLES.
5. FOR FLOOR RECEPTACLES, SEE ARCH DWG.
6. CONNECT TO SURROUND SOUND SYSTEM. COORDINATE INSTALLATION W/DOME MANUFACTURER PRIOR TO ROUGH-IN.
7. CONNECT TO SCI DOME HB AND CONSOLE SYSTEM. COORDINATE INSTALLATION W/DOME MANUFACTURER PRIOR TO ROUGH-IN.

KEY PLAN

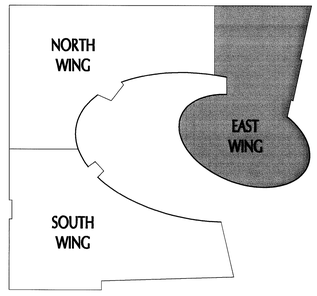

tBP
architecture
planning
interiors
management

tBP/Architecture
5455 Wilshire Boulevard, Suite 1200
Los Angeles, CA 90036-4242
ph: 323. 556. 3788 fx: 323. 556. 3799

LICENSED ARCHITECT — STATE OF CALIFORNIA

architect

S&K ENGINEERS
421 EAST HUNTINGTON DRIVE
MONROVIA, CALIFORNIA 91016
626-930-1385 Fax: 626-930-1383
Job No: 07034

REGISTERED PROFESSIONAL ENGINEER — STATE OF CALIFORNIA

consultant

IDENTIFICATION STAMP
DIV. OF THE STATE ARCHITECT
OFFICE OF REGULATION SERVICES
File No. 19-C11
Appl No. 03-112201
AC.____ RS ____ SS ____
DATE _____

DSA Los Angeles Basin Regional Office
700 North Alameda Street, Suite 5-500
Los Angeles, California 90012
ph: 213/897-3995 fx: 213/897-3159/0726

agency

ANTELOPE VALLEY COLLEGE HEALTH & SCIENCE BUILDING

ANTELOPE VALLEY COMMUNITY COLLEGE DISTRICT
3041 WEST AVENUE K
LANCASTER, CA 93536-5426

owner

tBP project number : 20641.00

file name: A0-0101-1FP.dwg

drawn by: K.U. checked by: L.J.

date: July 30, 2009 - 100% CD

Rev:	date:	description:
1	11/16/09	ADDENDUM #1
2	02/26/10	ADDENDUM #2

THIS DRAWING AND THE DESIGNS, DEPICTIONS, IDEAS AND OTHER INFORMATION CONTAINED HEREIN CONSTITUTE UNPUBLISHED WORK OF tBP/ARCHITECTURE AND SHALL REMAIN THE PROPERTY OF tBP/ARCHITECTURE IN PERPETUITY. NO PART THEREOF SHALL BE REPRODUCED, DISCLOSED, DISTRIBUTED, SOLD, PUBLISHED OR OTHERWISE USED IN ANY WAY WITHOUT THE ADVANCED EXPRESS WRITTEN CONSENT OF tBP/ARCHITECTURE.

drawing title:
FIRST FLOOR POWER PLAN - EAST WING

drawing no:
E3.3

drawing x of x

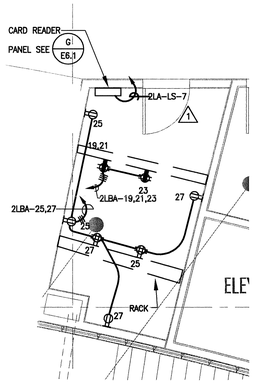

A ENLARGED IDF ROOM HS 270 (2)

SCALE: 1/4" = 1'-0"

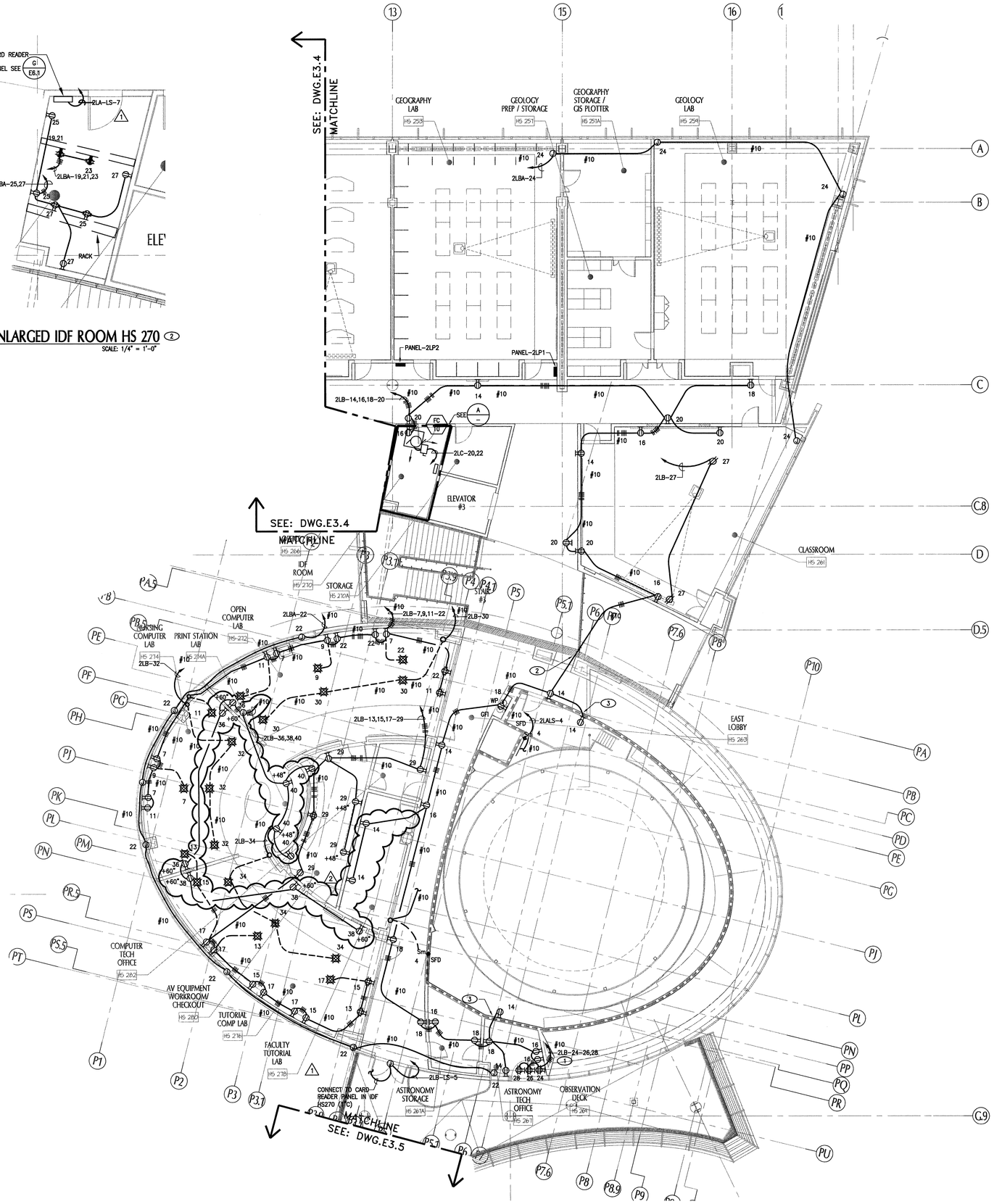

SECOND FLOOR POWER PLAN - EAST WING

SCALE: 1/8" = 1'-0"

KEYNOTES

1. FOR LIGHTING POWER ENGINE.
2. SEE DETAIL H/E6.1 FOR CONDUIT RUNNING THROUGH SEISMIC JOINT.
3. SEE DETAIL F/E6.1 FOR FIRE BARRIER WALL.

NO CONDUIT SHALL BE ATTACHED TO PROTECTED ZONED OF BRACED FRAMES. COORDINATE LOCATION W/STRUCTRAL.

KEY PLAN

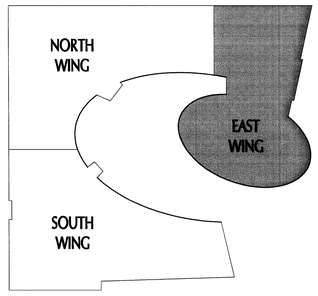

tBP architecture planning interiors management

tBP/Architecture
5455 Wilshire Boulevard, Suite 1200
Los Angeles, CA 90036-4242
ph: 323. 556. 3708 fx: 323. 556. 3799

architect

S&K ENGINEERS
421 EAST HUNTINGTON DRIVE
MONROVIA, CALIFORNIA 91016
626-930-1383 Fax: 626-930-1385
JOB No: 07034

consultant

IDENTIFICATION STAMP
DIV. OF THE STATE ARCHITECT
OFFICE OF REGULATION SERVICES
File No. 19-C11
Appl No. 03-112201
AC ____ RS ____ SS ____
DATE ____

DSA Los Angeles Basin Regional Office
700 North Alameda Street, Suite 5-500
Los Angeles, California 90012
ph: 213/897-3995 fx: 213/897-3159/0726

agency

ANTELOPE VALLEY COLLEGE HEALTH & SCIENCE BUILDING

ANTELOPE VALLEY COMMUNITY COLLEGE DISTRICT
3041 WEST AVENUE K
LANCASTER, CA 93536-5426

owner

tBP project number : 20641.00

file name: A0-0101-1FP.dwg

drawn by: K.U. checked by: L.J.

date: July 30, 2009 - 100% CD

Rev:	date:	description:
1	11/16/09	ADDENDUM #1
2	02/26/10	ADDENDUM #2

THIS DRAWING AND THE DESIGNS, DEPICTIONS, IDEAS AND OTHER INFORMATION CONTAINED HEREIN CONSTITUTE UNPUBLISHED WORK OF tBP/ARCHITECTURE AND SHALL REMAIN THE PROPERTY OF tBP/ARCHITECTURE IN PERPETUITY. NO PART THEREOF SHALL BE REPRODUCED, DISCLOSED, DISTRIBUTED, SOLD, PUBLISHED OR OTHERWISE USED IN ANY WAY WITHOUT THE ADVANCED EXPRESS WRITTEN CONSENT OF tBP/ARCHITECTURE.

drawing title:
SECOND FLOOR POWER PLAN - EAST WING

drawing no:
E3.6

drawing X of X

KEY NOTES:

1. LOCATED IN FIRST FLOOR ELECTRICAL ROOM HS147. SEE A/E6.1.

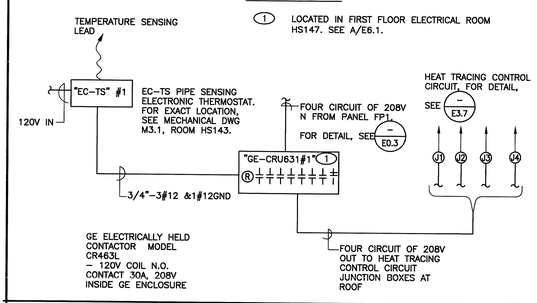

TYPICAL HEAT TRACING WIRING CONNNECTION#1 & #2 — SCALE NONE — N

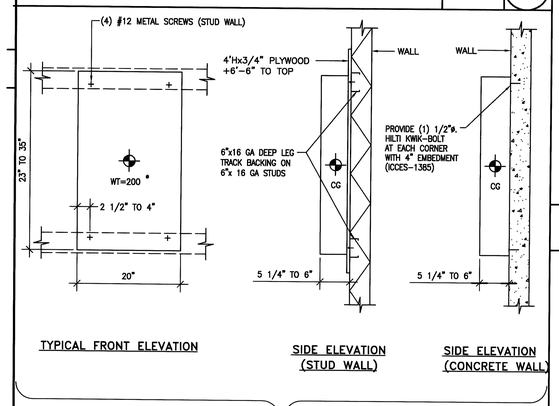

SURFACE MOUNTED

TYPICAL PANEL/CABINET MOUNTING DETAIL — SCALE NONE — M

REFERENCE TABLE
ELECTRICAL EQUIPMENT TO STRUCTURAL DETAIL DRAWINGS

ELECTRICAL EQUIPMENT	WEIGHT/LB.	REFERENCE DETAIL/ DRAWINGS
MS	4000	4/S5.09
EMS	1600	3/S5.09
T1	2590	5/S5.09
T2	1597	5/S5.09
ET-1	643	6/S5.09
ET-LS	351	6/S5.09
ATS-1	650	3/S5.10
ATS-LS	164	3/S5.10
EILDA	230	7/S5.10
1DLA	610	4/S5.10
E1DHA	615	7/S5.10
1DLB	610	7/S5.10
2DLB	225	7/S5.10
MCC1	2400	9/S5.09

REFERENCE TABLE ELECTRICAL EQUIPMENT TO STRUCTURAL DETAIL DRAWING — SCALE NONE — L

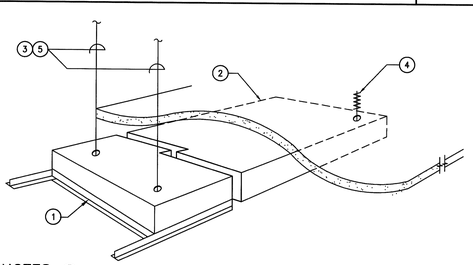

NOTES:
1. RECESSED LIGHT FIXTURE MOUNTED IN T-BAR CEILING
2. TYPICAL SURFACE MOUNTED LIGHT FIXTURE ON GYPBOARD CEILING.
3. #12 SUPPORT WIRES EACH CORNER.
4. SECURE TO CEILING SUPPORTS W/ #12 FASTNERS AT EACH CORNER. FOR SEISMIC RESTRAINT.
5. FOR ATTACHMENT OF HANGARS TO STRUCTURE SEE ARCHITECTURAL DRAWING DETAILS

COMPOSITE FLUORESCENT LIGHT FIXTURE MOUNTING AND SUPPORT DETAIL — SCALE NONE — K

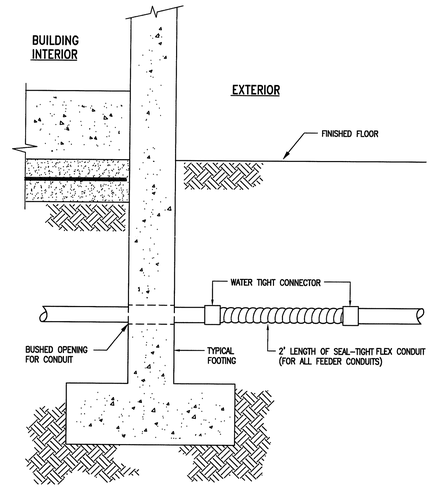

TYPICAL CONDUIT CROSSING AT UNDERGROUND SEISMIC OR DIFFERENTIAL SETTLEMENT JOINTS — SCALE NONE — J

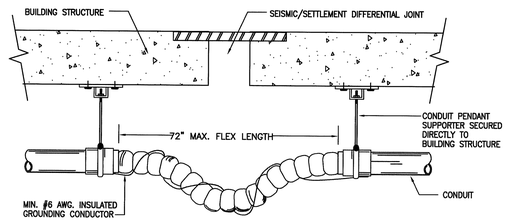

TYPICAL CONDUIT CROSSING AT SEISMIC OR DIFFERENTIAL SETTLEMENT JOINTS — SCALE NONE — H

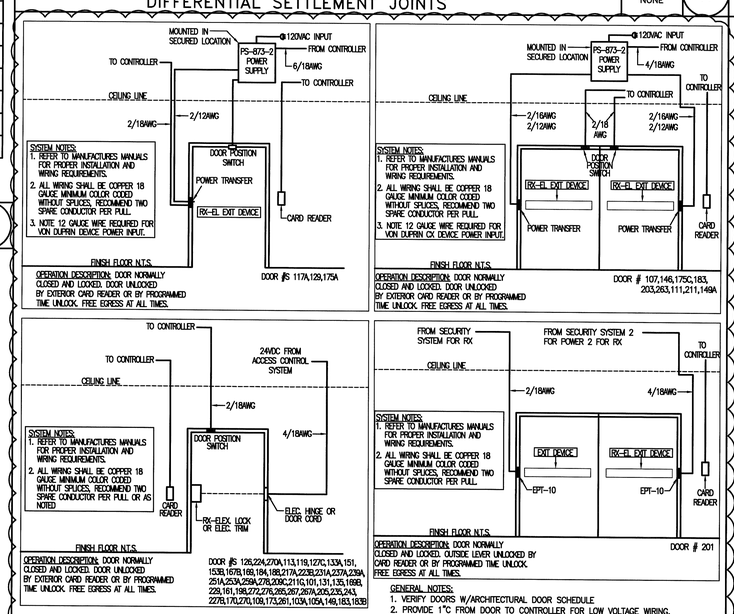

ACCESS CONTROL SYSTEM — SCALE NONE — G

NOTES:

1. PARTITION ASSEMBLY, VERIFY RATING WITH ARCHITECTURAL PLANS.
2. CONDUIT AS SHOWN ON PLANS.
3. FILL VOID BETWEEN PARTITION AND CONDUIT WITH FIRE RATED SEALANT. RATING TO EQUAL OR EXCEED RATING OF PARTITION. SEALANT TO BE BY 3-M, TYPE CP-25 S/L, CP-25 N/S.
4. KEEP SPACE BETWEEN CONDUIT AND PARTITION OPENING, MAXIMUM 3/8 INCH.

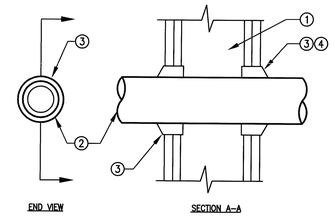

CONDUIT PENETRATION IN FIRE RATED PARTITIONS — SCALE NONE — F

KEY NOTES:

1. FOR WALL MOUNTED PANEL DETAIL, SEE DETAIL M THIS SHEET.

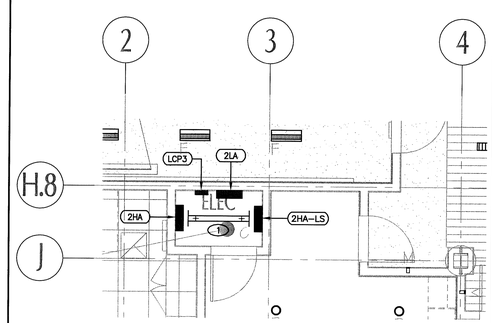

PARTIAL SECOND FLOOR PLAN — SCALE 1/4"=1'-0" — E

KEY NOTES:

1. SEE DETAIL L THIS SHEET FOR REFERENCE TABLE OF ELECTRICAL EQUIPMENT TO STRUCTURAL ANCHORAGE.
2. FOR WALL MOUNTED PANEL DETAIL, SEE DETAIL M THIS SHEET.

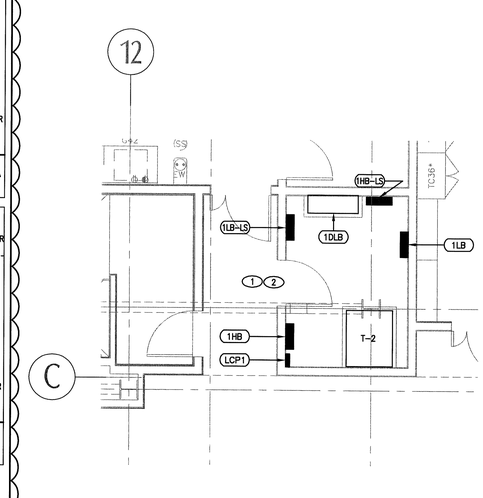

PARTIAL FIRST FLOOR PLAN — SCALE 1/4"=1'-0" — D

GENERAL NOTE

1. SUSPENDED AT 9' AFF

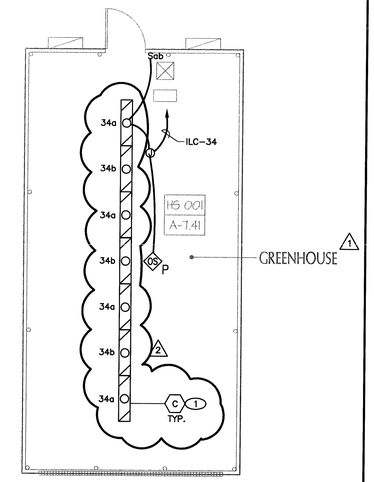

GREENHOUSE LIGHTING PLAN — SCALE 3/16"=1'-0" — C

KEY NOTES:

1. SEE DETAIL L THIS SHEET FOR REFERENCE TABLE OF ELECTRICAL EQUIPMENT TO STRUCTURAL ANCHORAGE.
2. FOR WALL MOUNTED PANEL DETAIL, SEE DETAIL M THIS SHEET.

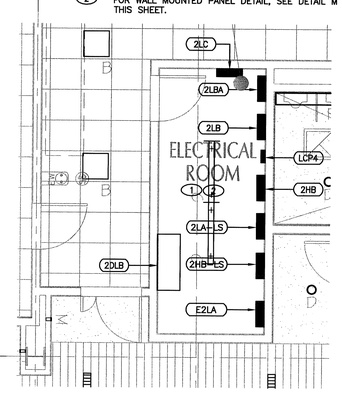

PARTIAL SECOND FLOOR PLAN — SCALE 1/4"=1'-0" — B

KEY NOTES:

1. SEE DETAIL L THIS SHEET FOR REFERENCE TABLE OF ELECTRICAL EQUIPMENT TO STRUCTURAL ANCHORAGE.
2. FOR WALL MOUNTED PANEL DETAIL, SEE DETAIL M THIS SHEET.

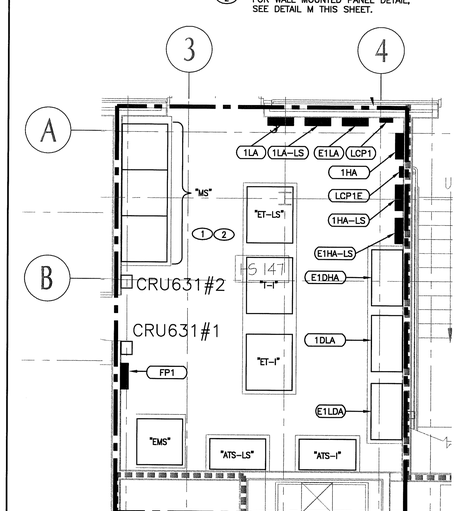

PARTIAL FIRST FLOOR PLAN — SCALE 1/4"=1'-0" — A

tBP
architecture planning interiors management
tBP/Architecture
5455 Wilshire boulevard, Suite 1200
Los Angeles, CA 90036-4242
ph: 323. 556. 3788 fx: 323. 556. 3799
architect

S&K ENGINEERS
421 EAST HUNTINGTON DRIVE
MONROVIA, CALIFORNIA 91016
626-930-1383 Fax: 626-930-1385
Job No: 07034
consultant

IDENTIFICATION STAMP
DIV. OF THE STATE ARCHITECT
OFFICE OF REGULATION SERVICES
File No. 19-C11
Appl No. 03-112201
AC ____ RS ____ SS ____
DATE ____

DSA Los Angeles Basin Regional Office
700 North Alameda Street, Suite 5-500
Los Angeles, California 90012
ph: 213/897-3995 fx: 213/897-3159/0726
agency

ANTELOPE VALLEY COLLEGE HEALTH & SCIENCE BUILDING

ANTELOPE VALLEY COMMUNITY COLLEGE DISTRICT
3041 WEST AVENUE K
LANCASTER, CA 93536-5426

owner

tBP project number : 2064L00
file name: A0-0101-IFP.dwg
drawn by: K.U. checked by: L.J.
date: July 30, 2009 - 100% CD

Rev:	date:	description:
1	11/16/09	ADDENDUM #1
2	02/26/10	ADDENDUM #2

THIS DRAWING AND THE DESIGNS, DEPICTIONS, IDEAS AND OTHER INFORMATION CONTAINED HEREIN CONSTITUTE UNPUBLISHED WORK OF tBP/ARCHITECTURE AND SHALL REMAIN THE PROPERTY OF tBP/ARCHITECTURE IN PERPETUITY. NO PART THEREOF SHALL BE REPRODUCED, PUBLISHED, DISTRIBUTED, SOLD, PUBLISHED OR OTHERWISE USED IN ANY WAY WITHOUT THE ADVANCED EXPRESS WRITTEN CONSENT OF tBP/ARCHITECTURE.

drawing title:
ELECTRICAL PARTIAL FLOOR PLANS

drawing no:
E6.1
drawing x of x

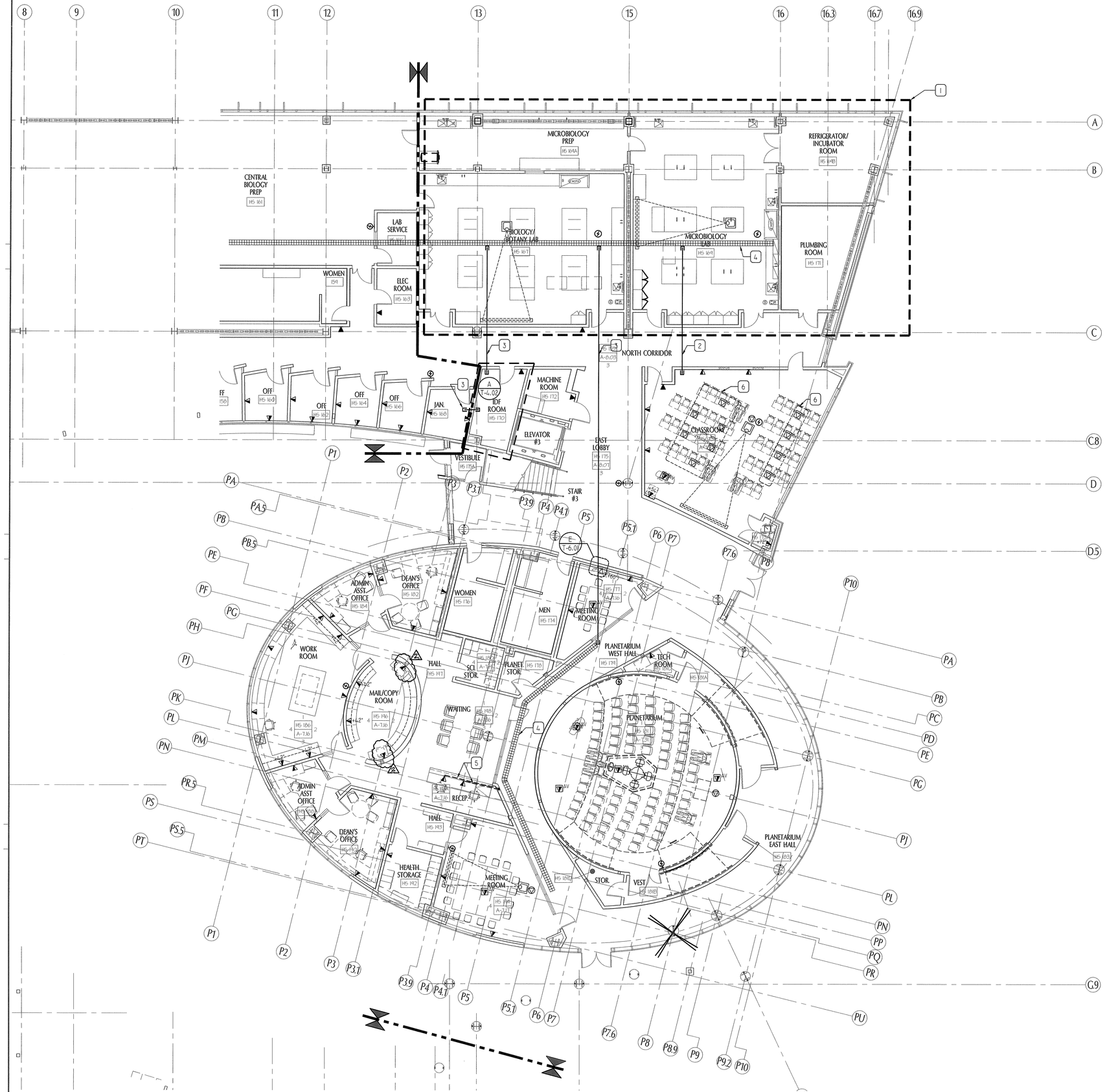

A COMMUNICATIONS - 1ST FLOOR PLAN - EAST WING
SCALE=1/8" = 1' 0"

SHEET NOTES:

1. OUTLETS IN EAST WING AREA SHALL BE FED FROM IDF HS#170.
2. AT NO TIME, SHALL DIAGONAL MEMBERS OF STRUCTURALBRACED FRAME BE USED TO SUPPORT WIRE BASKET CABLE TRAY, CABLE SUPPORTS OR MISC. EQIUPMENT.

REFERENCE NOTES:

1. REFER TO LAB DRAWING-LE 2.XX FOR ADDITIONAL TELECOMMUNICATIONS OUTLET LOCATIONS.
2. (1) 4" CONDUIT
3. (2) 4" CONDUITS
4. 12"X6" WIRE BASKET CABLE TRAY. SEE D/T-6.01 FOR MOUNTING DETAIL.
5. (1) 1" CONDUIT FROM CASEWORK MOUNTED OUTLET TO WALL CAVITY. COORDINATE CONDUIT STUB UP LOCATION IN CASEWORK WITH ARCHITECT.
6. POWER/DATA FLOOR BOX FOR FUTURE EXPANSION. NO TELECOM CABLES SHALL BE INSTALLED ON DAY ONE.

KEY PLAN

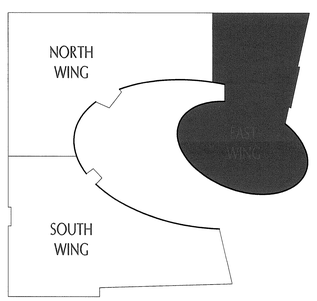

tBP
architecture
planning
interiors
management

tBP/Architecture
5455 Wilshire Boulevard, Suite 1200
Los Angeles, CA 90036-4242
ph: 323. 556. 3788 fx: 323. 556. 3799
architect

VANTAGE
Vantage Technology Consulting Group
201 Continental Blvd.Suite 120
El Segundo California 90245
310 536 7676 ● fax 310 536 7677 ● www.VantageTCG.com
consultant

IDENTIFICATION STAMP
DIV. OF THE STATE ARCHITECT
OFFICE OF REGULATION SERVICES
File No. 19-C11
Appl No. 03-112201
AC.____ FLS ____ SS ____
DATE ____

DSA Los Angeles Basin Regional Office
700 North Alameda Street, Suite 5-500
Los Angeles, California 90012
ph: 213/897-3995 fx: 213/897-3159/0726
agency

ANTELOPE VALLEY COLLEGE HEALTH & SCIENCE BUILDING

ANTELOPE VALLEY COMMUNITY COLLEGE DISTRICT
3041 WEST AVENUE K
LANCASTER, CA 93536-5426
owner

tBP project number : 20641.00
file name: 424-1 T201C.DWG
drawn by: CL checked by: ATJR
date: JULY 30, 2009 - 100% CD

Rev:	date:	description:
2	26 FEB. 2010	ADDENDUM #2

THIS DRAWING AND THE DESIGNS, DEPICTIONS, IDEAS AND OTHER INFORMATION CONTAINED HEREIN CONSTITUTE UNPUBLISHED WORK OF tBP/ARCHITECTURE AND SHALL REMAIN THE PROPERTY OF tBP/ARCHITECTURE IN PERPETUITY. NO PART THEREOF SHALL BE REPRODUCED, DISCLOSED, DISTRIBUTED, SOLD, PUBLISHED OR OTHERWISE USED IN ANY WAY WITHOUT THE ADVANCED EXPRESS WRITTEN CONSENT OF tBP/ARCHITECTURE.

drawing title:
COMMUNICATIONS-
1ST FLR. PLAN EAST WING

drawing no.:
T-2.01C
drawing - of -

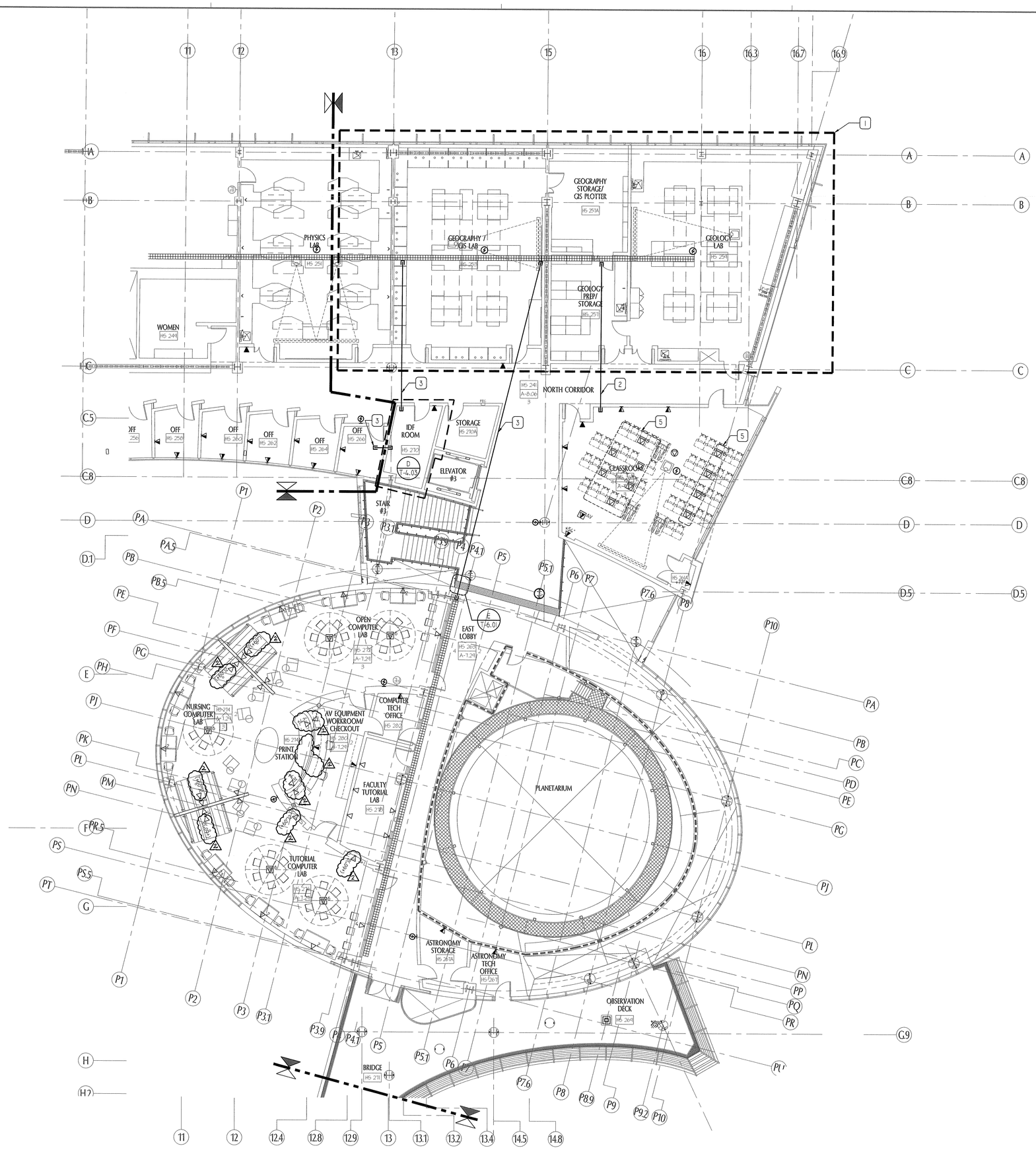

A COMMUNICATIONS - 2ND FLOOR PLAN - EAST WING
SCALE= 1/8" = 1' 0"

NORTH

SHEET NOTES:

1. OUTLETS IN EAST WING AREA SHALL BE FED FROM IDF HS#270.
2. AT NO TIME, SHALL DIAGONAL MEMBERS OF STRUCTURAL BRACED FRAME BE USED TO SUPPORT WIRE BASKET CABLE TRAY, CABLE SUPPORTS OR MISC. EQIUPMENT.

REFERENCE NOTES:

1. REFER TO LAB DRAWINGS - LE 2.XX FOR ADDITIONAL TELECOMMUNICATIONS OUTLET LOCATIONS.
2. (1) 4" CONDUIT
3. (2) 4" CONDUITS
4. 12"X6" WIRE BASKET CABLE TRAY. SEE D/T-6.01 FOR MOUNTING DETAIL.
5. POWER/DATA FLOOR BOX FOR FUTURE EXPANSION. NO TELECOM CABLES SHALL BE INSTALLED ON DAY ONE.

KEY PLAN

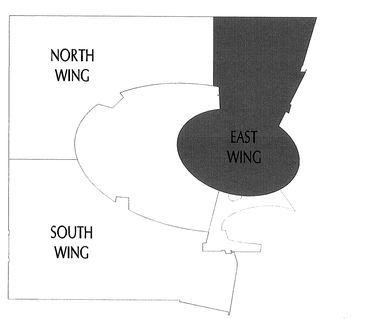

NORTH

tBP
architecture
planning
interiors
management

tBP/Architecture
5455 Wilshire Boulevard, Suite 1200
Los Angeles, CA 90036-4242
ph: 323. 556. 3788 fx: 323. 556. 3799
architect

LICENSED ARCHITECT
STATE OF CALIFORNIA

VANTAGE
Vantage Technology Consulting Group
201 Continental Blvd. Suite 120
El Segundo, California 90245
310 536 7676 ■ fax 310 536 7677 ■ www.VantageTCG.com
consultant

REGISTERED PROFESSIONAL ENGINEER
E-15
Exp. 06/30/2011
ELECTRICAL
STATE OF CALIFORNIA

IDENTIFICATION STAMP
DIV. OF THE STATE ARCHITECT
OFFICE OF REGULATION SERVICES
File No. 19-C11
Appl No. 03-112201
AC _____ FLS _____ SS _____
DATE _____

DSA Los Angeles Basin Regional Office
700 North Alameda Street, Suite 5-500
Los Angeles, California 90012
ph: 213/897-3995 fx: 213/897-3159/0726
agency

ANTELOPE VALLEY COLLEGE HEALTH & SCIENCE BUILDING

ANTELOPE VALLEY COMMUNITY COLLEGE DISTRICT
3041 WEST AVENUE K
LANCASTER, CA 93536-5426

owner

tBP project number : 206410.00
file name: 424-1 T2.02C.DWG
drawn by: GL checked by: ATER
date: JULY 30, 2009 - 100% CD

Rev:	date:	description:
2	26 FEB. 2010	ADDENDUM #2

THIS DRAWING AND THE DESIGNS, DEPICTIONS, IDEAS AND OTHER INFORMATION CONTAINED HEREIN CONSTITUTE UNPUBLISHED WORK OF tBP/ARCHITECTURE AND SHALL REMAIN THE PROPERTY OF tBP/ARCHITECTURE IN PERPETUITY. NO PART THEREOF SHALL BE REPRODUCED, DISCLOSED, DISTRIBUTED, SOLD, PUBLISHED OR OTHERWISE USED IN ANY WAY WITHOUT THE ADVANCED EXPRESS WRITTEN CONSENT OF tBP/ARCHITECTURE.

drawing title:
COMMUNICATIONS-
2ND FLR. PLAN EAST WING

drawing no.:
T-2.02C
drawing - of -

FOODSERVICE EQUIPMENT SCHEDULE

Specification						Electrical				Plumbing								Mechanical				OVERALL SERVICE UTILITIES	
Item No.	Qty	Description	Manufacturer	Model No.	Remarks	AMP	V	PH	NEMA	120HW	GPH	CW	DW	IW	FS	GAS	MBTU	Exhaust Size	Make-up Size	CFM	SP	Remarks	Item No.
1.1	2	VENTILATOR, EXHAUST	GEMINI	WCBD-FL200 875122.5	WEIGHT=292 LBS.	1.5	120	1										10"x13"		1450	0.75"	TYPE I HOOD	1.1
1.2	2	FIRE SUPPRESSION SYSTEM	PYRO-CHEM	KITCHEN KNIGHT II	UL EX-3830, WEIGHT=83 LBS.	10.0	120	1														DED CIR	1.2
1.3	3	WALL FLASHING, STAINLESS STEEL	CUSTOM FABRICATION																				1.3
1.4	2	RANGE, (2) O.B./GRIDDLE W/CONVECTION OVEN	JADE	JTRH-18GT-2-36C		4.0	120	1	5-15P							1"	135						1.4
1.5	3	COOKTOP, DROP-IN, ELECTRIC	GE	PP980SMSS		31.25	208	1														40.0 A BREAKER	1.5
1.6	2	COUNTER W/SINKS/FAUCET	MILLWORK		REFER TO ARCH DRAWINGS	(3)20.0	120	1	5-20P	1/2"	40	1/2"	(2)2"										1.6
1.7	1	DISPOSER	IN-SINK-ERATOR	LC-50		5.8	120	1	5-15P				2"										1.7
2.1	2	DISHWASHER, U.C.	GE	PDW9980NSS		9.1	120	1	5-15P	1/2"			2"										2.1
2.2	2	CABINET, WALL MOUNT	MILLWORK		REFER TO ARCH DRAWINGS																		2.2
3.1	2	OVEN, MICROWAVE	AMANA	ALD10T		13.2	120	1	5-15P													20.0 A BREAKER	3.1
3.2A	1	VENTILATOR, EXHAUST	GEMINI	WCBD-FL250 1235122.5	WEIGHT=782 LBS.	2.5	120	1										12"X19"		2562	0.75"	TYPE I HOOD	3.2A
3.2B	1	VENTILATOR, EXHAUST	GEMINI	WCBD-FL250 1235122.5	WEIGHT=382 LBS.	2.5	120	1										12"X19"		2562	0.75"	TYPE I HOOD	3.2B
3.3	1	FIRE SUPPRESSION SYSTEM	PYRO-CHEM	KITCHEN KNIGHT II	UL EX-3830; WEIGHT INCL. IN #3.2A	10.0	120	1														DED CIR	3.3
3.4	1	WALL FLASHING, STAINLESS STEEL	CUSTOM FABRICATION																				3.4
3.5	1	KETTLE, 20 GAL, TILT, FLOOR	CLEVELAND	KET20-T	W/HCW SWING FAUCET/BRACKET	34.2	208	3		1/2"	20	1/2"	1/2"										3.5
3.6	1	FLOOR TROUGH AND GRATE	DURAY	FT-1 18"x27"									3"										3.6
3.7	1	FRYER ASSEMBLY	FRYMASTER	H55-SC	BATTERY (3) FRYERS	(3)1.0	120	1	5-15P							1-1/2"	240					QUICK DISCONNECT HOSE	3.7
3.8	1	STEAMER, ELECTRIC, 1-SECTION	CLEVELAND	22-CET-3A	W/STAND	26.1	208	3				(2)3/4"		1"	X								3.8
3.9	1	CABINET, FREE-STANDING	CUSTOM FABRICATION																				3.9
3.10	1	OVEN, CONVECTION, ELECTRIC, 2-SECTION	GE	PT956SMSS		32.7	208	1														40.0 A BREAKER	3.10
4.1	1	VENTILATOR, EXHAUST	GEMINI	WCBD-FL200 454222.5	WEIGHT=238 LBS.	2.5	120	1										8"X10"		750	0.75"	TYPE I HOOD	4.1
4.2	1	FIRE SUPPRESSION SYSTEM	PYRO-CHEM	KITCHEN KNIGHT II	UL EX-3830; WEIGHT=53 LBS.	10.0	120	1														DED CIR	4.2
5.1	1	SINK ASSEMBLY W/FAUCETS/SOAP DISPENSERS	JUST MANUFACTURING	JRLA-60-24-S	BATTERY POWERED					(2)1/2"	(2)5	1/2	(2)1-1/4"										5.1
5.2	1	DISPOSABLE TOWEL DISPENSER	SAN JAMAR	T149000TBK	BATTERY POWERED																		5.2
2 6.1	1	REFRIGERATOR, REACH-IN, 2-SECTION	UTILITY	R-60-SA-2S-D	SELF-CONTAINED REFRIGERATION	13.5	120	1	5-20P														6.1
6.2	1	FREEZER, REACH-IN, 2-SECTION	UTILITY	F-60-SA-2S-D	SELF-CONTAINED REFRIGERATION	19.3	120	1	5-30P														6.2

NOTE: The loads shown are for a quantity of one (1) each. Multiple quantities require multiple loads.

ABBREVIATIONS

AFF = ABOVE FINISHED FLOOR
AMP = AMPERES (FULL-LOAD)
BEV = BEVERAGE
CFCI = CONTRACTOR FURNISHED/INSTALLED
CFM = CUBIC FEET PER MINUTE
CIR = CIRCUIT
CLG = CEILING
COMP = COMPARTMENT
CW = COLD WATER
DED = DEDICATED
DFC = DOWN FROM CEILING
DW = DIRECT WASTE
ELEC = ELECTRICAL
F = FAHRENHEIT
FIX = FIXTURE
FS = FLOOR SINK
GPH = GALLONS PER HOUR
GRD = GROUND
HW = HOT WATER
ISO = ISOLATED
IW = INDIRECT WASTE
MBTU = MEGA BRITISH THERMAL UNIT
MTD = MOUNTED
NEMA = NATIONAL ELECTRIC MANUFACTURES ASSOCIATION
NO. = NUMBER
OB = OPEN BURNER
OFCI = OWNER FURNISHED CONTRACTOR INSTALLED
OFOI = OWNER FURNISHED/INSTALLED
QTY = QUANTITY
RECEPT = RECEPTACLE
REFN = REFRIGERATION
RI = REACH-IN
SEC = SECTION
SP = STATIC PRESSURE
TBD = TO BE DETERMINED
UC = UNDER COUNTER
UFF = UP FROM FLOOR
VFVI = VENDOR FURNISHED/INSTALLED
VOLT = VOLTAGE
W/ = WITH
WI = WALK-IN
WM = WALL MOUNT

FOODSERVICE EQUIPMENT SCHEDULE (FUTURE)

Specification						Electrical				Plumbing								Mechanical				OVERALL SERVICE UTILITIES	
Item No.	Qty	Description	Manufacturer	Model No.	Remarks	AMP	V	PH	NEMA	120HW	GPH	CW	DW	IW	FS	GAS	MBTU	Exhaust Size	Make-up Size	CFM	SP	Remarks	Item No.
F1.1	2	VENTILATOR, EXHAUST	GEMINI	WCBD-FL200 875122.5	WEIGHT=292 LBS.	1.5	120	1										10"x13"		1450	0.75"	TYPE I HOOD; CAP FOR FUTURE USE	F1.1
F1.2	2	FIRE SUPPRESSION SYSTEM	PYRO-CHEM	KITCHEN KNIGHT II	UL EX-3830; WEIGHT=83 LBS.	10.0	120	1														DED CIR; CAP FOR FUTURE USE	F1.2
F1.3		SPARE NUMBER																					F1.3
F1.4	2	RANGE, (2) O.B./GRIDDLE W/CONVECTION OVEN	JADE	JTRH-18GT-2-36C		4.0	120	1	5-15P							1"	135					CAP FOR FUTURE USE	F1.4
F1.5	2	COOKTOP, DROP-IN, ELECTRIC	GE	PP980SMSS		31.25	208	1														40.0 A BREAKER; CAP FOR FUTURE USE	F1.5
F1.6	2	COUNTER W/SINKS/FAUCET	MILLWORK		REFER TO ARCH DRAWINGS	(3)20.0	120	1	5-20P	1/2"	40	1/2"	(2)2"									CAP FOR FUTURE USE	F1.6
F1.7	2	DISPOSER	IN-SINK-ERATOR	LC-50		5.8	120	1	5-15P				2"									CAP FOR FUTURE USE	F1.7
F2.1	2	DISHWASHER, U.C.	GE	PDW9980NSS		9.1	120	1	5-15P	1/2"			2"									CAP FOR FUTURE USE	F2.1
F2.2	2	CABINET, WALL MOUNT	MILWORK		REFER TO ARCH DRAWINGS																	CAP FOR FUTURE USE	F2.2
F3.1	2	OVEN, MICROWAVE	AMANA	ALD10T		13.2	120	1	5-15P													20.0 A BREAKER	F3.1
F4.1	1	VENTILATOR, EXHAUST	GEMINI	WCB-FL200 454222.5	WEIGHT=238 LBS.	2.5	120	1										8"X10"		750	0.75"	TYPE I HOOD; CAP FOR FUTURE USE	F4.1
F4.2	1	FIRE SUPPRESSION SYSTEM	PYRO-CHEM	KITCHEN KNIGHT II	UL EX-3830; WEIGHT=53 LBS.	10.0	120	1														DED CIR; CAP FOR FUTURE USE	F4.2

NOTE: The loads shown are for a quantity of one (1) each. Multiple quantities require multiple loads.

GENERAL NOTE (FUTURE = "F" TAGS)

TAGS BEGININNG WITH "F" PREFIX ARE FOR FUTURE EQUIPMENT BUILDING SERVICES. CAP FOR FUTURE USE AND PROVIDE COVER PLATES.

tBP
architecture
planning
interiors
management

LICENSED ARCHITECT
C. VAN WYE
No. 22628
REGISTERED PROFESSIONAL ENGINEER
STATE OF CALIFORNIA

tBP/Architecture
5455 Wilshire Boulevard, Suite 1200
Los Angeles, CA 90036-4242
ph: 323. 556. 3788 fx: 323. 556. 3799
architect

20315 Ventura Boulevard
Woodcourt, Suite D
Woodland Hills, California
91364 USA
Phone
818.713.9011
Fax
818.713.1104
Email
llanier@laschobersovich.com

Laschober+Sovich
FOOD FACILITIES CONSULTANTS
consultant

IDENTIFICATION STAMP
DIV. OF THE STATE ARCHITECT
OFFICE OF REGULATION SERVICES
File No. 19-C11
Appl No. 03-112201
AC ____ RS ____ SS ____
DATE ____

DSA Los Angeles Basin Regional Office
700 North Alameda Street, Suite 5-500
Los Angeles, California 90012
ph: 213/897-3995 fx: 213/897-3159/0726
agency

ANTELOPE VALLEY COLLEGE
HEALTH & SCIENCE BUILDING
ANTELOPE VALLEY COMMUNITY COLLEGE DISTRICT
3041 WEST AVENUE K
LANCASTER, CA 93536-5426
owner

tBP project number : 206.41.00
file name: K-1.01.dwg
drawn by: checked by:
date: JULY 30, 2009 - 100% CD

Rev:	date:	description:
1	11/16/09	ADDENDUM #1
2	2/26/10	ADDENDUM #2

THIS DRAWING AND THE DESIGNS, DEPICTIONS, IDEAS AND OTHER INFORMATION CONTAINED HEREIN CONSTITUTE UNPUBLISHED WORK OF tBP/ARCHITECTURE AND SHALL REMAIN THE PROPERTY OF tBP/ARCHITECTURE IN PERPETUITY. NO PART THEREOF SHALL BE REPRODUCED, DISCLOSED, DISTRIBUTED, SOLD, PUBLISHED OR OTHERWISE USED IN ANY WAY WITHOUT THE ADVANCED EXPRESS WRITTEN CONSENT OF tBP/ARCHITECTURE.

drawing title:
EQUIPMENT SCHEDULE

drawing no:
K-1.01
drawing of

GENERAL NOTE (FUTURE = "F" TAGS)

TAGS BEGININNG WITH "F" PREFIX ARE FOR FUTURE EQUIPMENT BUILDING SERVICES. CAP FOR FUTURE USE AND PROVIDE COVER PLATES.

DSA NOTES

1. ALL 'HARDWARE AND GAS" KITCHEN EQUIPMENT SHALL BE INSTALLED WITH SEISMIC RESTRAINTS PER GUIDELINES FOR SEISMIC RESTRAINTS OF KITCHEN EQUIPMENT AS PUBLISHED BY SMACNA AND APPROVED BY DSA.
2. WHERE ANCHORAGE DETAILS ARE NOT SHOWN ON DRAWINGS OR IN THE GUIDELINES, THE FIELD INSTALLATION SHALL BE SUBJECT TO THE APPROVAL OF THE ARCHITECT AND THE OSA FIELD ENGINEER.
3. A COPY OF THE GUIDELINES SHALL BE PROVIDED BY THE CONTRACTOR AND KEPT ON THE JOB SITE AT ALL TIMES.

KEYNOTES

1 SEE 4/S-6.10 FOR HOOD SUPPORT AND CROSS-BRACING

GENERAL NOTES

1. ALL FOODSERVICE AND RELATED EQUIPMENT SHALL BE NSF APPROVED AND IN CONFORMITY WITH LOCAL HEALTH REGULATIONS. INSTALLATION OF EQUIPMENT SHALL MEET THE SAME REQUIREMENTS.
2. FLOORS IN FOOD PREPARATION AREAS SHALL BE SMOOTH AND IMPERVIOUS TO WATER, GREASE, AND ACID MADE OF EASILY CLEAN ABLE CONSTRUCTION.
3. FLOORS IN ALL AREAS WHERE FOOD IS PREPARED, PACKAGED OR STORED OR WHERE REFUSE OR GARBAGE IS STORED, JANITORIAL FACILITIES AND IN ALL TOILET AND HAND WASHING AREAS, SHALL BE AN APPROVED TYPE THAT CONTINUES UP THE WALL 6" AND UP TOE KICKS AT LEAST 4" WITH A MINIMUM 3/8" RADIUS COVE BASE. TOP SET BASE IS ONLY ACCEPTABLE IN THE DINING AREAS.
4. ALL REFRIGERATION EQUIPMENT SHALL HAVE A THERMOMETER WHICH IS EASILY READABLE IN PROPER WORKING CONDITION.
5. WALLS IN FOOD PREPARATION AREAS AND DISHWASHING AREAS SHALL BE SMOOTH AND NONABSORBENT WITH A LIGHT COLORED, EASILY CLEAN ABLE FINISH. ALL PAINTED SURFACES SHALL BE SEALED WITH A GLOSS OR SEMI-GLOSS ENAMEL.
6. CEILINGS IN KITCHEN PREPARATION AREAS SHALL BE SMOOTH AND NONABSORBENT WITH A LIGHT COLORED, EASILY CLEANABLE FINISH.
7. HAND WASH SINKS SHALL BE PROVIDED IN THE FOOD PREPARATION AREAS.
8. SOAP AND SANITARY TOWELS SHALL BE PROVIDED IN SINGLE SERVICE, PERMANENTLY INSTALLED DISPENSERS AT THE HAND WASH SINKS.
9. TOILET FACILITIES SHALL BE PROVIDED WITHIN EACH FOOD ESTABLISHMENT CONVENIENT FOR THE EMPLOYEES. ALL TOILET ROOMS SHALL BE PROVIDED WITH MECHANICAL VENTILATION APPROVED BY THE HEALTH DEPARTMENT.
10. A ROOM OR ENCLOSURE AT LEAST 5'-0" X 5'-0", SEPARATED FROM TOILETS, FOOD STORAGE OR FOOD PREP AREAS SHALL BE PROVIDED WHERE EMPLOYEES MAY CHANGE AND STORE THEIR CLOTHES AND PERSONAL BELONGINGS.
11. ALL DELIVERY DOORS LEADING TO THE OUTSIDE SHALL OPEN OUTWARD, BE SELF CLOSING, AND SHALL BE PROVIDED WITH AN OVERHEAD AIR CURTAIN. AIR CURTAIN SHALL PRODUCE A DOWNWARD AND OUTWARD AIRFLOW NOT LESS THAN 3" THICK AT THE NOZZLE WITH AN AIR VELOCITY OF NOT LESS THAN 1500 FPM ACROSS ENTIRE OPENING.
12. LIQUOR, BEER/WINE AND REFRIGERATION CONTRACTORS WILL FURNISH AND INSTALL COMPONENT LINES AND EQUIPMENT REQUIRED TO COMPLETE THEIR SYSTEMS TO OPERATING CONDITION.

LEGEND

- EQUIPMENT FLOOR/COUNTERTOP (CONTINUOUS linetype)
- EQUIPMENT UNDERNEATH COUNTERTOP (HIDDEN2 linetype)
- EQUIPMENT OVERHEAD (DIVIDE2 linetype)
- EQUIPMENT ACCESS, DOOR OR DRAWER (CENTER2 linetype)
- EQUIPMENT ABOVE COUNTERTOP (DASHDOT2 linetype)
- EQUIPMENT DETAIL (CONTINUOUS linetype)
- EQUIPMENT DETAIL BELOW COUNTERTOP (HIDDEN2 linetype)
- A K-6.00 ELEVATION TAG, ELEVATION/SHEET NUMBER
- 1 K-6.00 SECTION TAG, SECTION/SHEET NUMBER
- 1 KEYNOTE TAG, KEYNOTE NUMBER
- 44 EQUIPMENT TAG, EQUIPMENT NUMBER

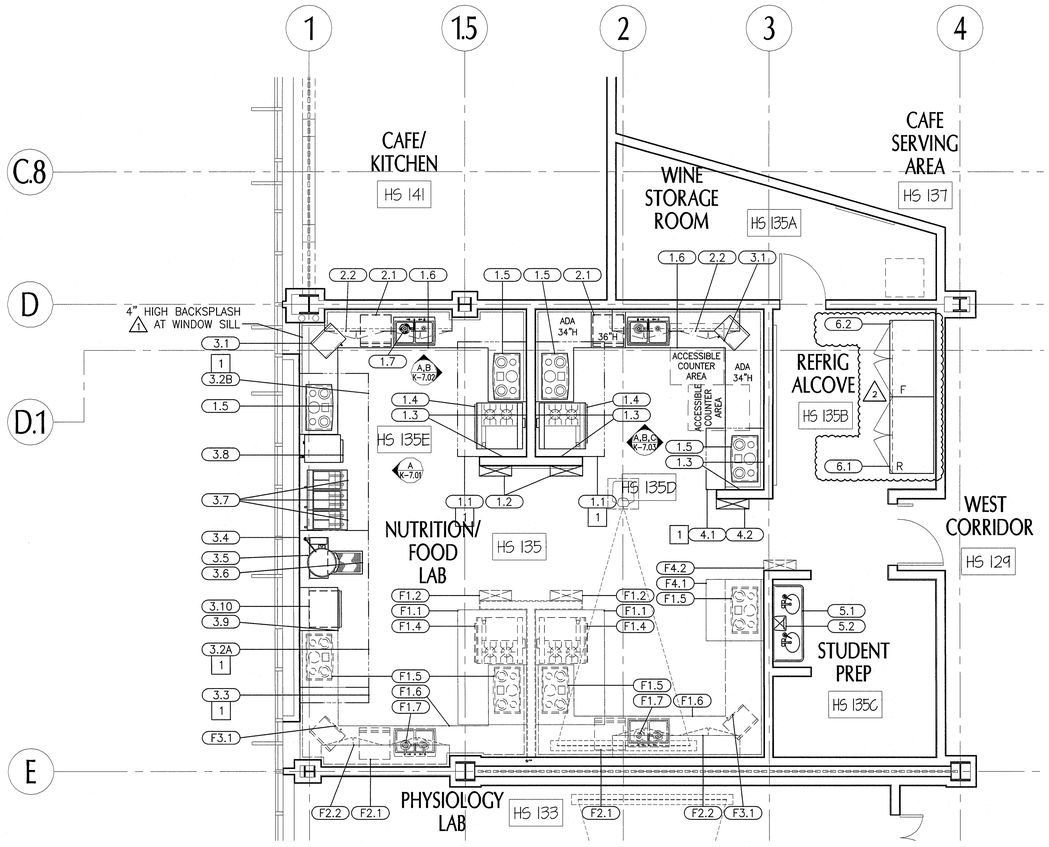

EQUIPMENT PLAN

0 1' 2' 3' 4' 5' 6' 7' 8' 9' 10' 11' 12'
1/4" = 1'-0"

KEY PLAN

NORTH

tBP
architecture
planning
interiors
management

tBP/Architecture
5455 Wilshire Boulevard, Suite 1200
Los Angeles, CA 90036-4242
ph: 323. 556. 3788 fx: 323. 556. 3799
architect

20315 Ventura Boulevard
Woodcourt, Suite D
Woodland Hills, California
91364 USA
Phone
818.713.9011
Fax
818.713.1104
Email
lloanier@laschobersovich.com
Laschober+Sovich
FOOD FACILITIES CONSULTANTS
consultant

IDENTIFICATION STAMP
DIV. OF THE STATE ARCHITECT
OFFICE OF REGULATION SERVICES
File No. 19-C11
Appl No. 03-112201
AC _____ RLS _____ SS _____
DATE _____

DSA Los Angeles Basin Regional Office
700 North Alameda Street, Suite 5-500
Los Angeles, California 90012
ph: 213/897-3995 fx: 213/897-3159/0726
agency

ANTELOPE VALLEY COLLEGE HEALTH & SCIENCE BUILDING

ANTELOPE VALLEY COMMUNITY COLLEGE DISTRICT
3041 WEST AVENUE K
LANCASTER, CA 93536-5426
owner

tBP project number : 20641.00
file name: K-1.02.dwg
drawn by: checked by:
date: JULY 30, 2009 - 100% CD

Rev:	date:	description:
1	11/16/09	ADDENDUM #1
2	2/26/10	ADDENDUM #2

THIS DRAWING AND THE DESIGNS, DEPICTIONS, IDEAS AND OTHER INFORMATION CONTAINED HEREIN CONSTITUTE UNPUBLISHED WORK OF tBP/ARCHITECTURE AND SHALL REMAIN THE PROPERTY OF tBP/ARCHITECTURE IN PERPETUITY. NO PART THEREOF SHALL BE REPRODUCED, DISCLOSED, DISTRIBUTED, SOLD, PUBLISHED OR OTHERWISE USED IN ANY WAY WITHOUT THE ADVANCED EXPRESS WRITTEN CONSENT OF tBP/ARCHITECTURE.

drawing title:
PARTIAL FIRST FLOOR EQUIPMENT PLAN

drawing no.:
K-1.02
drawing of

GENERAL NOTE (FUTURE = "F" TAGS)

TAGS BEGININNG WITH "F" PREFIX ARE FOR FUTURE EQUIPMENT BUILDING SERVICES. CAP FOR FUTURE USE AND PROVIDE COVER PLATES.

DSA NOTES

1. ALL 'HARDWARE AND GAS" KITCHEN EQUIPMENT SHALL BE INSTALLED WITH SEISMIC RESTRAINTS PER GUIDELINES FOR SEISMIC RESTRAINTS OF KITCHEN EQUIPMENT AS PUBLISHED BY SMACNA AND APPROVED BY DSA.
2. WHERE ANCHORAGE DETAILS ARE NOT SHOWN ON DRAWINGS OR IN THE GUIDELINES, THE FIELD INSTALLATION SHALL BE SUBJECT TO THE APPROVAL OF THE ARCHITECT AND THE OSA FIELD ENGINEER.
3. A COPY OF THE GUIDELINES SHALL BE PROVIDED BY THE CONTRACTOR AND KEPT ON THE JOB SITE AT ALL TIMES.

ELECTRICAL KEYNOTES

E1 CONDUIT WITH 2-WIRES TO GAS SOLENOID SHUT-OFF VALVE TO BREAK GAS SERVICE TO EQUIPMENT UNDER VENTILATOR.

E2 CONDUIT WITH 2-WIRES TO SHUNT-TRIP TO BREAK ELECTRICAL SERVICE TO TO EQUIPMENT UNDER VENTILATOR.

ELECTRICAL NOTES

1. IT IS THE INTENTION OF THIS PLAN TO SHOW UTILITY REQUIREMENTS AND APPROXIMATE ROUGH-IN POINTS. DO NOT USE FOR ROUGH-IN LOCATIONS. FOR ACTUAL ROUGH-IN LOCATIONS REFER TO DRAWINGS PROVIDED BY THE KITCHEN EQUIPMENT CONTRACTOR.
2. ALL EQUIPMENT RECEPTACLES TO BE POLARIZED. PROVIDE STANDARD U-SLOT DUPLEX 3-WIRE GROUNDING TYPE RECEPTACLES FOR ALL 120 VOLT OUTLETS.
3. KITCHEN EQUIPMENT CONTRACTOR SHALL FURNISH AND INSTALL ALL ELECTRICAL WORK WITHIN FABRICATED COUNTERS AND TABLES AS NOTED: COMPLETE WITH JUNCTION BOXES, CONDUIT, SURFACE MOUNTED ELECTRICAL BOXES, RECEPTACLES, COVER PLATES, ELECTRICAL RACEWAYS, CIRCUIT BREAKER PANEL AND WIRING. ELECTRICAL CONTRACTOR SHALL MAKE ALL FINAL CONNECTIONS.
4. ADDITIONAL CONVENIENCE RECEPTACLES, TELEPHONE AND INTERCOM JACKS SHALL BE LOCATED BY ARCHITECTS.
5. ALL SWITCHES, EXCEPT FOR THOSE REQUIRED FOR SPECIAL APPLICATION, SHALL BE CIRCUIT BREAKER TYPE.
6. KITCHEN EQUIPMENT CONTRACTOR SHALL FURNISH AND INSTALL VAPOR PROOF VENTILATOR LIGHTS COMPLETE WITH LAMPS, INTERCONNECTING CONDUIT AND WIRING TO J-BOX ON VENTILATOR. ELECTRICAL CONTRACTOR SHALL FURNISH AND INSTALL SWITCH, INTERCONNECTING CONDUIT AND WIRING TO J-BOX ON VENTILATOR AND MAKE FINAL CONNECTIONS.
7. THE FIRE PROTECTION SYSTEM FOR THE KITCHEN WILL BE FURNISHED WITH ELECTRIC GAS SOLENOID SHUT-OFF VALVE TO BE INSTALLED IN THE GAS LINE SERVING EQUIPMENT UNDER THE VENTILATORS ELECTRICAL CONTRACTOR SHALL INSTALL THE INTERCONNECTING CONDUIT AND WIRING TO GAS SOLENOID VALVE.
8. ELECTRICAL CONTRACTOR SHALL FURNISH AND INSTALL CONTACTORS FOR BREAKING THE ELECTRICAL SERVICE TO ALL ELECTRICAL EQUIPMENT UNDER VENTILATORS. PROVIDE INTERCONNECTING CONDUIT AND WIRING TO FIRE PROTECTION SYSTEM CONTROL PANEL.
9. ALL FOOD PREPARATION AREAS, ALL DISHWASHING AREAS, AND ALL BAR AND FOUNTAIN GLASS WASHING SINKS (EXCEPT WHERE ALCOHOLIC BEVERAGE UTENSILS ARE WASHED) SHALL BE PROVIDED WITH AT LEAST 20 FOOT CANDLES OF LIGHT, AS MEASURED 30 INCHES ABOVE THE FLOOR. FOOD AND UTENSIL STORAGE ROOMS, REFRIGERATED STORAGE, TOILET ROOMS, AND DRESSING ROOMS SHALL BE PROVIDED WITH AT LEAST 10 FOOT- CANDLES OF LIGHT.

ELECTRICAL LEGEND

- JUNCTION BOX AT WALL ROUGH-IN AND CONNECTION
- JUNCTION BOX AT FIXTURE ROUGH-IN AND CONNECTION
- SERVICE FLEX AT CEILING ROUGH-IN AND CONNECTION
- SINGLE RECEPTACLE AT WALL ROUGH-IN AND CONNECTION
- DOUBLE RECEPTACLE AT WALL ROUGH-IN AND CONNECTION
- VAPOR-PROOF LIGHT FIXTURE ROUGH-IN AND CONNECTION
- POWER SWITCH AT WALL ROUGH-IN AND CONNECTION
- ELECTRICAL SERVICE, FREE-RUN (CONTINUOUS linetype)
- ELECTRICAL SERVICE, FIXTURE-RUN (HIDDEN2 linetype)
- E1 KEYNOTE TAG, KEYNOTE NUMBER
- 44 EQUIPMENT TAG, EQUIPMENT NUMBER

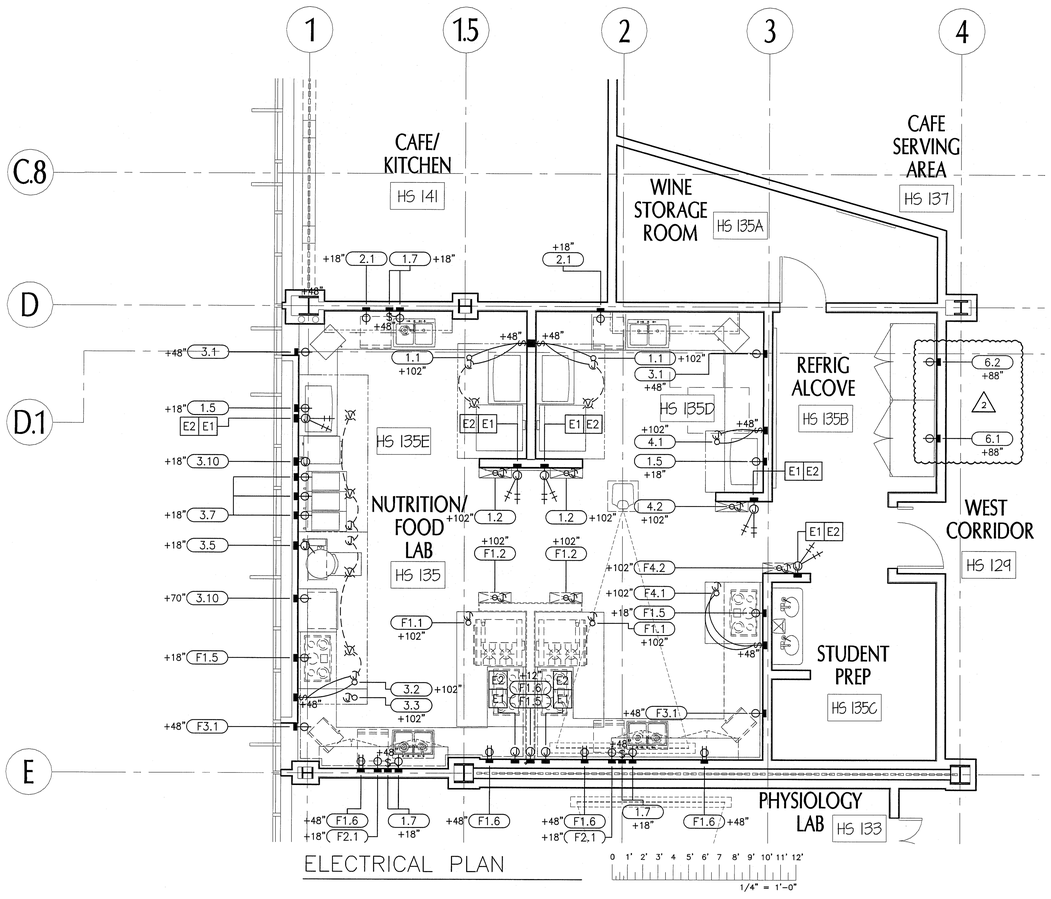

ELECTRICAL PLAN

KEY PLAN

NORTH

tBP architecture planning interiors management

tBP/Architecture
5455 Wilshire Boulevard, Suite 1200
Los Angeles, CA 90036-4242
ph: 323. 556. 3788 fx: 323. 556. 3799

LICENSED ARCHITECT STATE OF CALIFORNIA

architect

20315 Ventura Boulevard
Woodcourt, Suite D
Woodland Hills, California
91364 USA
Phone
818.713.9011
Fax
818.713.1104
Email
llanier@laschobersovich.com

Laschober+Sovich
FOOD FACILITIES CONSULTANTS

consultant

IDENTIFICATION STAMP
DIV. OF THE STATE ARCHITECT
OFFICE OF REGULATION SERVICES
File No. 19-C11
Appl No. 03-112201
AC _____ FLS _____ SS _____
DATE _____

DSA Los Angeles Basin Regional Office
700 North Alameda Street, Suite 5-500
Los Angeles, California 90012
ph: 213/897-3995 fx: 213/897-3159/0726

agency

ANTELOPE VALLEY COLLEGE HEALTH & SCIENCE BUILDING

ANTELOPE VALLEY COMMUNITY COLLEGE DISTRICT
3041 WEST AVENUE K
LANCASTER, CA 93536-5426

owner

tBP project number : 20641.00
file name: K-1.02.dwg
drawn by: checked by:
date: JULY 30, 2009 - 100% CD

Rev:	date:	description:
1	11/16/09	ADDENDUM #1
2	2/26/10	ADDENDUM #2

THIS DRAWING AND THE DESIGNS, DEPICTIONS, IDEAS AND OTHER INFORMATION CONTAINED HEREIN CONSTITUTE UNPUBLISHED WORK OF tBP/ARCHITECTURE AND SHALL REMAIN THE PROPERTY OF tBP/ARCHITECTURE IN PERPETUITY. NO PART THEREOF SHALL BE REPRODUCED, DISCLOSED, DISTRIBUTED, SOLD, PUBLISHED OR OTHERWISE USED IN ANY WAY WITHOUT THE ADVANCED EXPRESSO WRITTEN CONSENT OF tBP/ARCHITECTURE.

drawing title:
PARTIAL FIRST FLOOR ELECTRICAL PLAN

drawing no.:
K-1.04
drawing of